Fermi National Accelerator Laboratory

TM-1562
[SSC-N-592]

A Cryogenic Test Stand for Full Length SSC Magnets with Superfluid Capability

T. J. Peterson and P. O. Mazur
Fermi National Accelerator Laboratory
P.O. Box 500, Batavia, Illinois

February 1989

* To be published in the proceedings of the 1989 International Industrial Symposium on the Super Collider (IISSC), New Orleans, Louisiana, February 8-10, 1989.

Operated by Universities Research Association, Inc., under contract with the United States Department of Energy

A CRYOGENIC TEST STAND FOR FULL LENGTH SSC MAGNETS WITH SUPERFLUID CAPABILITY

T. J. Peterson and P. O. Mazur

Fermi National Accelerator Laboratory*
Batavia, Illinois

ABSTRACT

The Fermilab Magnet Test Facility performs testing of the full scale SSC magnets on test stands capable of simulating the cryogenic environment of the SSC main ring. One of these test stands, Stand 5, also has the ability to operate the magnet under test at temperatures from 1.8K to 4.5K with either supercritical helium or subcooled liquid, providing at least 25 Watts of refrigeration. At least 50 g/s flow is available from 2.3K to 4.5K, whereas superfluid operation occurs with zero flow. Cooldown time from 4.5K to 1.8K is 1.5 hours. A maximum current capability of 10000 amps is provided, as is instrumentation to monitor and control the cryogenic conditions. This paper describes the cryogenic design of this test stand.

* Operated by Universities Research Association, Inc. under contract with the U.S. Department of Energy.

INTRODUCTION

Fermilab's Magnet Test Facility has been modified to include two test stations suitable for testing full length (17 meter) prototype SSC dipole magnets (Figure 1). The 1500 Watt helium refrigerator which provides liquid nitrogen and 4.5K helium to these test stands is described in detail most recently in "Operational History of Fermilab's 1500 W Refrigerator Used for Energy Saver Magnet Production Testing".[1] At this facility all of the more than 1000 superconducting dipoles and quadrupoles were cold tested prior to installation in the Tevatron. Of the original six test stations fed by the 1500 Watt refrigerator, three remain for testing new Tevatron components, and two special SSC magnet test stations have been built. These differ from the Tevatron magnet test stations not only in having an interface which mates to the SSC magnets, but in providing flow to a low-temperature helium gas shield (absent in the Tevatron) and in having the capability to cool the magnet below 4 Kelvin.

The first of these SSC test stands is described in "Cryogenic Instrumentation of an SSC Magnet Test Stand". [2] It is capable of providing up to 30 grams/sec of 4 atm helium at temperatures as low as 3 Kelvin. A second test stand, capable of providing a larger range of helium flow rates and temperatures, is now operational. It can provide up to 50 grams/sec of 4 atm helium down to 2.3 Kelvin, and also has the capability of cooling full length SSC magnets with stagnant or forced-flow pressurized superfluid (helium II) down to 1.8 K. The latest report of SSC magnet test results from these test stands is "Tests of Full Scale SSC R&D Dipole Magnets". [3]

Other 1.8K magnet cooling facilities which have previously been described in the literature include a dual bath system holding about 90 liters of pressurized superfluid[4] which is in principle like the "Claudet bath".[5] A 1.8K test dewar, also of the dual bath design, is presently used for testing short LHC magnets at CERN. It contains about 530 liters of superfluid and has 9 Watts of cooling capacity at 1.8K.[6] The Francis Bitter Magnet Laboratory at MIT has a dual bath cryostat for cooling the superconducting portion of high field hybrid magnets to 1.8K.[7]

This report describes some of the unique cryogenic features of Fermilab's 1.8K magnet test stand, (Figure 2) which, due to its

88-
33-
2

Fig. 1 Photopgraph of the Magnet Test Facility at Fermilab with SSC dipoles at the two SSC magnet test stands.

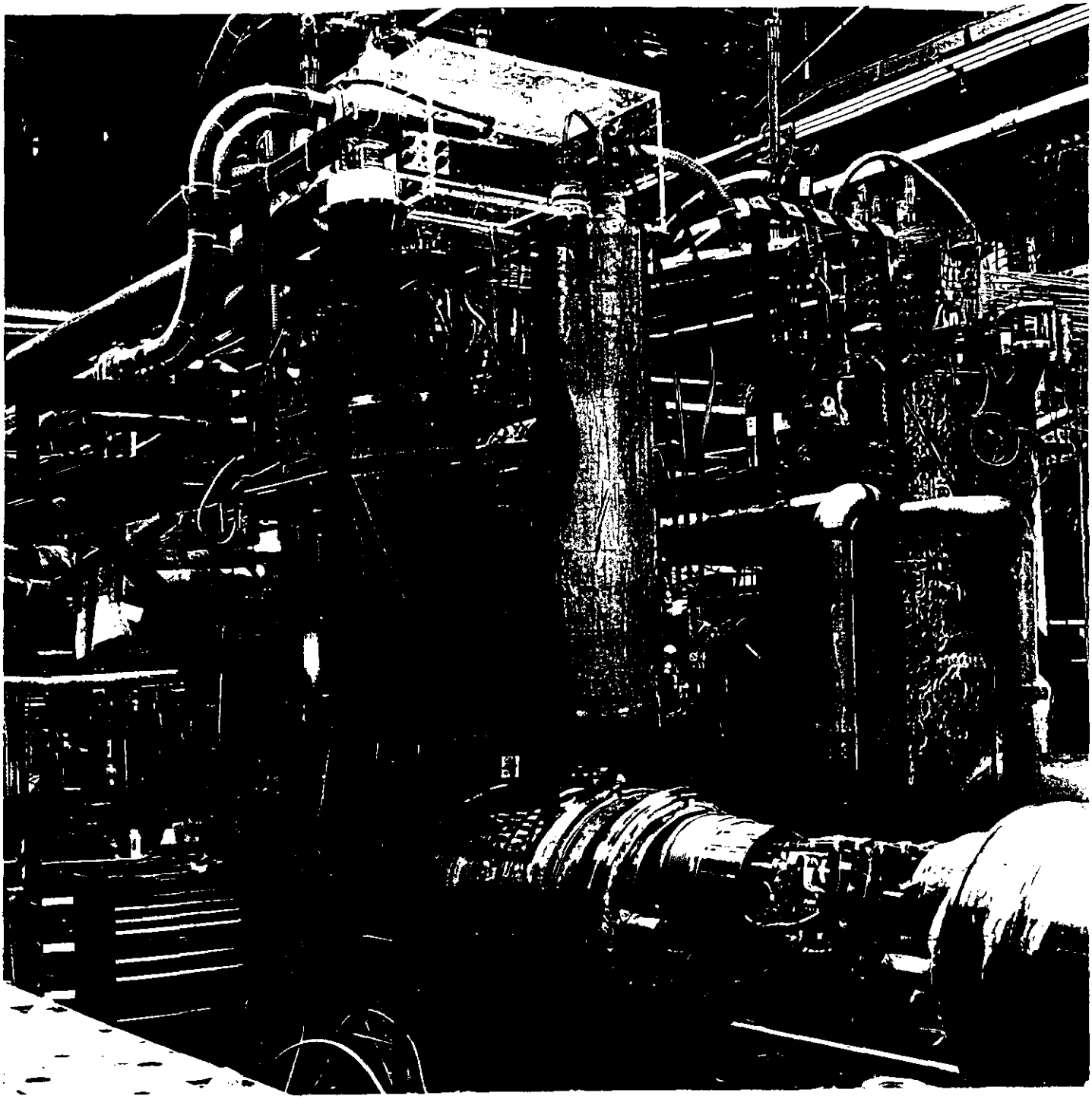

Fig. 2. Photograph of Stand 5.

location at the magnet test facility, is refered to as Stand 5. The following is a list of those features which we would like to highlight.

1. Heat exchangers were designed to accomodate three operating modes: (a) subcool up to 100 g/s of normal helium (helium I), (b) provide a forced flow of superfluid at a lower flow rate, and (c) to remove heat returned to the subcooler by the high apparent thermal conductivity of stagnant superfluid.

2. Special check valves are located at each large-diameter penetration (e.g., cooldown lines and quench reliefs) to the superfluid space which reduce the heat inleak to acceptable levels.

3. 10 KA current leads are mounted in a separate, demountable can for quick replacement.

4. Pumping to obtain the low pressures for the saturated bath of superfluid in the subcooler is provided via room-temperature pumps: a roots blower backed up by a liquid ring pump.

SYSTEM DESCRIPTION

Figure 3 is a simplified flow schematic for Stand 5. For forced-flow magnet cooling the pressurized (2 to 4 atm) helium enters the test stand from the 1500 Watt refrigerator where it splits, part going into the shell side of exchanger 1 (HX1), a simple finned tube-in-shell exchanger which precools the supply via counterflow heat exchange with the return flow. After HX1 the flow splits again, part to the JT exchanger (JTX) where the flow which maintains the liquid level in the subcooler (HX2) via the liquid level valve is precooled by the pumped boil-off vapor, and part to the tubes in the bath in HX2 where it is cooled to near bath temperature. The other branch of flow above HX1 cools the base of the power leads (part goes up the leads for the usual counter-current cooling) and then goes to the 4.5K shield.

For cooling with stagnant superfluid the liquid return valve is closed, subcooler liquid level is maintained as in the forced flow cooling mode, power lead and shield cooling is also the same, and the

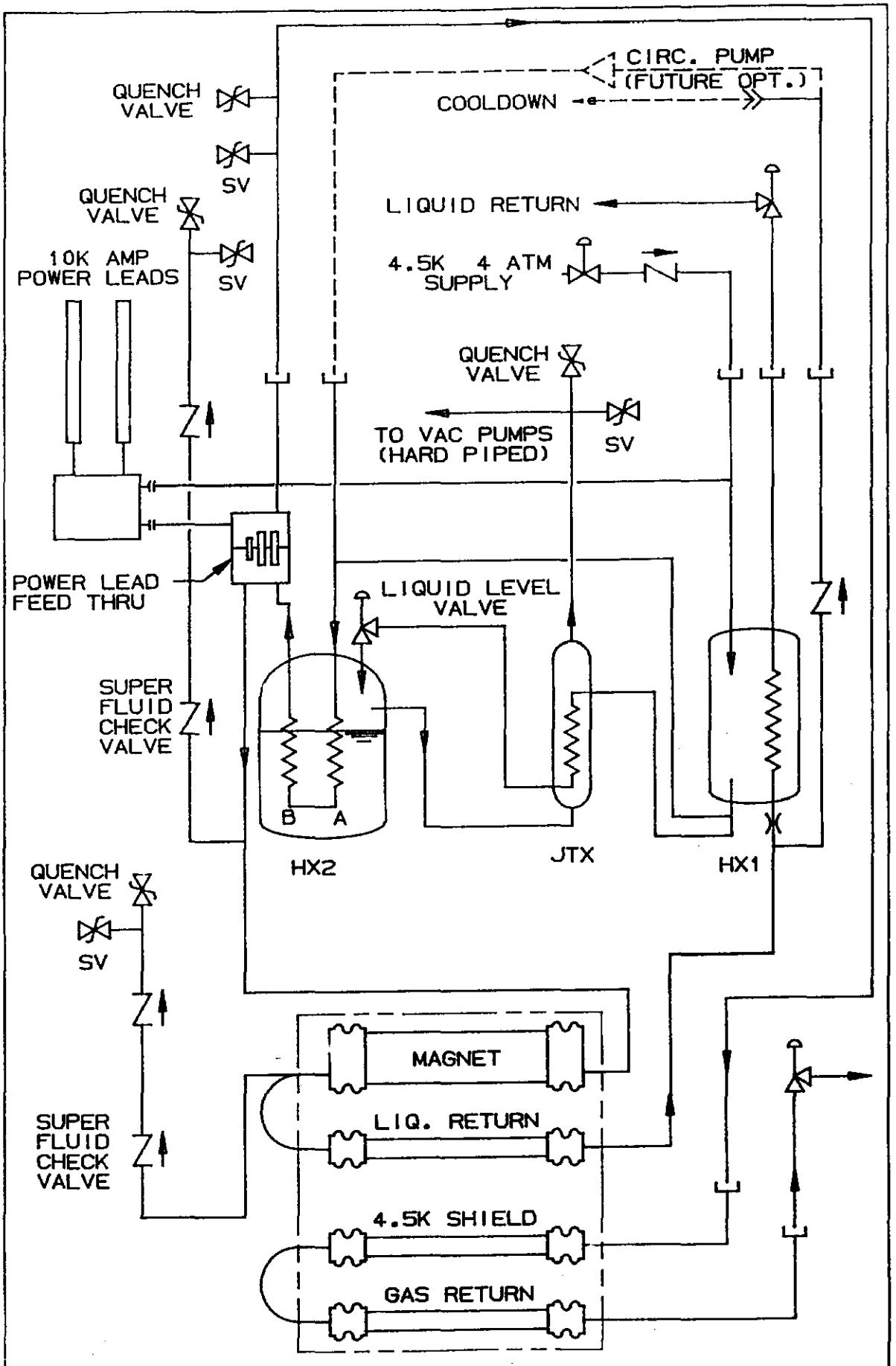

Fig. 3. Flow schematic for Stand 5.

pressurized stagnant superfluid is cooled via heat exchange with the saturated bath. HX2 (Figure 4) has two sections in series: first, a coil of finned copper tubing to cool forced flow of up to 100 g/sec of normal helium, and second, seven parallel vertical copper tubes containing the pressurized superfluid, with large inner diameter and surface areas to improve heat transfer through the superfluid from the magnet and reduce the delta-T due to the Kapitza resistance. These seven vertical tubes are 66 cm long, 2.5 cm diameter, and have 0.5 cm tall fins to enhance the surface area in the low-pressure bath. The total inner surface area is about 3000 square cm, and the outer surface area is about 14500 square cm. Pipes totaling 80 square cm of cross-section and about 60 cm in length connect these seven copper tubes to the magnet, permitting a large heat flux from the magnet in stagnant superfluid.

The region of piping which is designed to contain superfluid is separated from the 4.5K helium region by specially designed check valves (Figure 5) where a significant pressure drop is not acceptable, such as at the cooldown line and quench relief lines. We expect a temperature of 2.17K at the top of the plug in this check valve and process temperature (about 1.8K) below the plug. For this situation the total heat leak through the check valve would be about 0.5 Watts if the plug fit into its seat with an average gap of .004 inches. We expect a much better fit than that, in which case the heat leak of 0.1 Watt through the bleed hole in the center of the plug may dominate the heat leak. This bleed hole allows pressures above and below to equilibrate when mass is trapped above the check valve.

In other places a tube of length and diameter to minimize heat flux into the superfluid while allowing sufficient flow with acceptable pressure drops in forced-flow conditions is utilized. We chose to use a 1.5 meter length of 1.1 cm inner-diameter tubing, which, if one end were at T-lambda (2.17K) and the other at 1.8K would transport 1.2 Watts of heat (calculations based on reference 8), and with 50 g/s flow of 1.4 atmosphere liquid helium has a 1.0 psid pressure drop.

Connections for an optional circulating pump are shown in figure 1. These are special bayonet connections designed for superfluid as well as helium I, but no tests with a circulating pump have been performed yet.

The current leads are mounted to the main vacuum vessel in their own container (the vertically oriented can above the interface

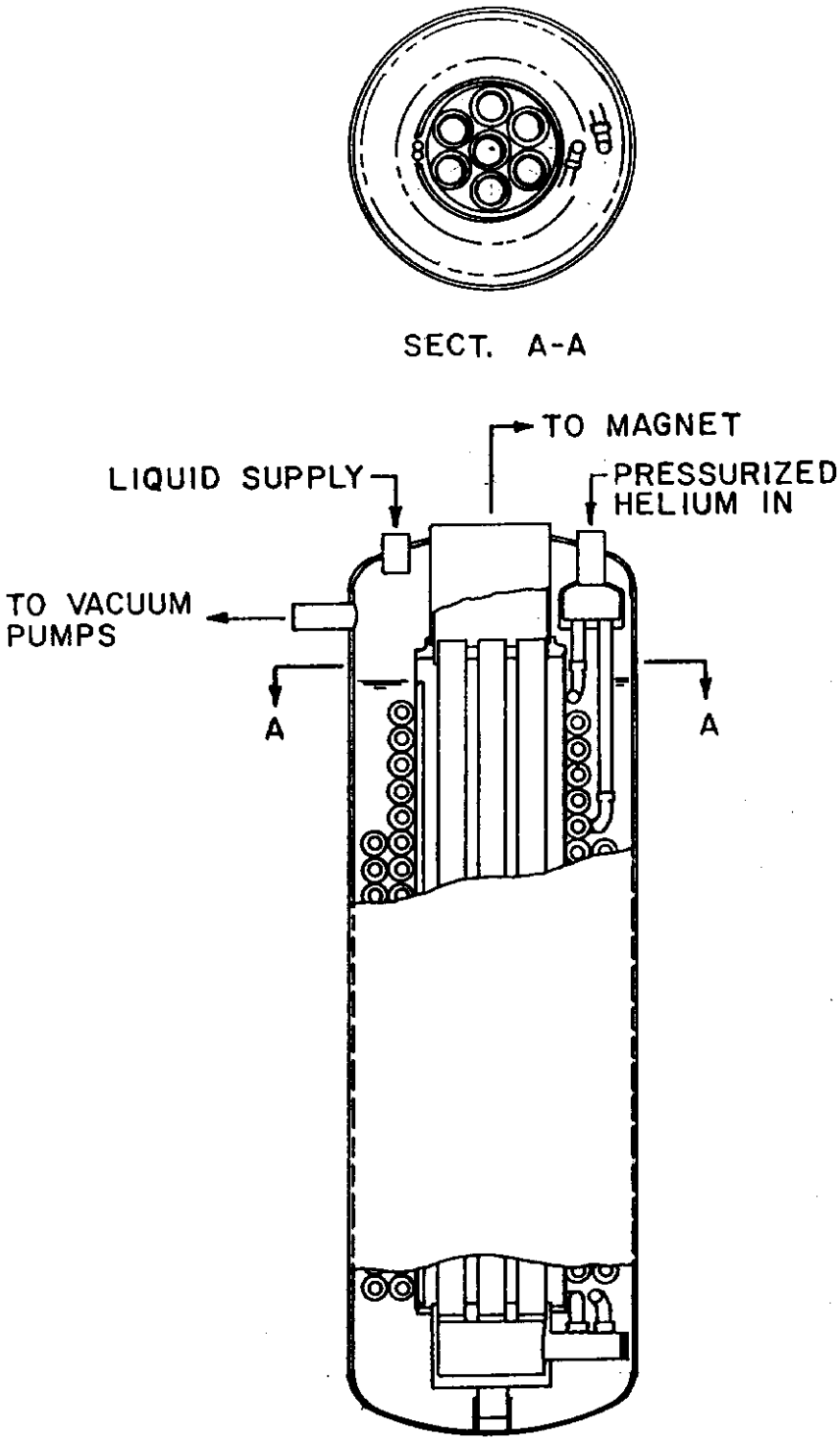

Fig. 4. The low temperature subcooler, HX2.

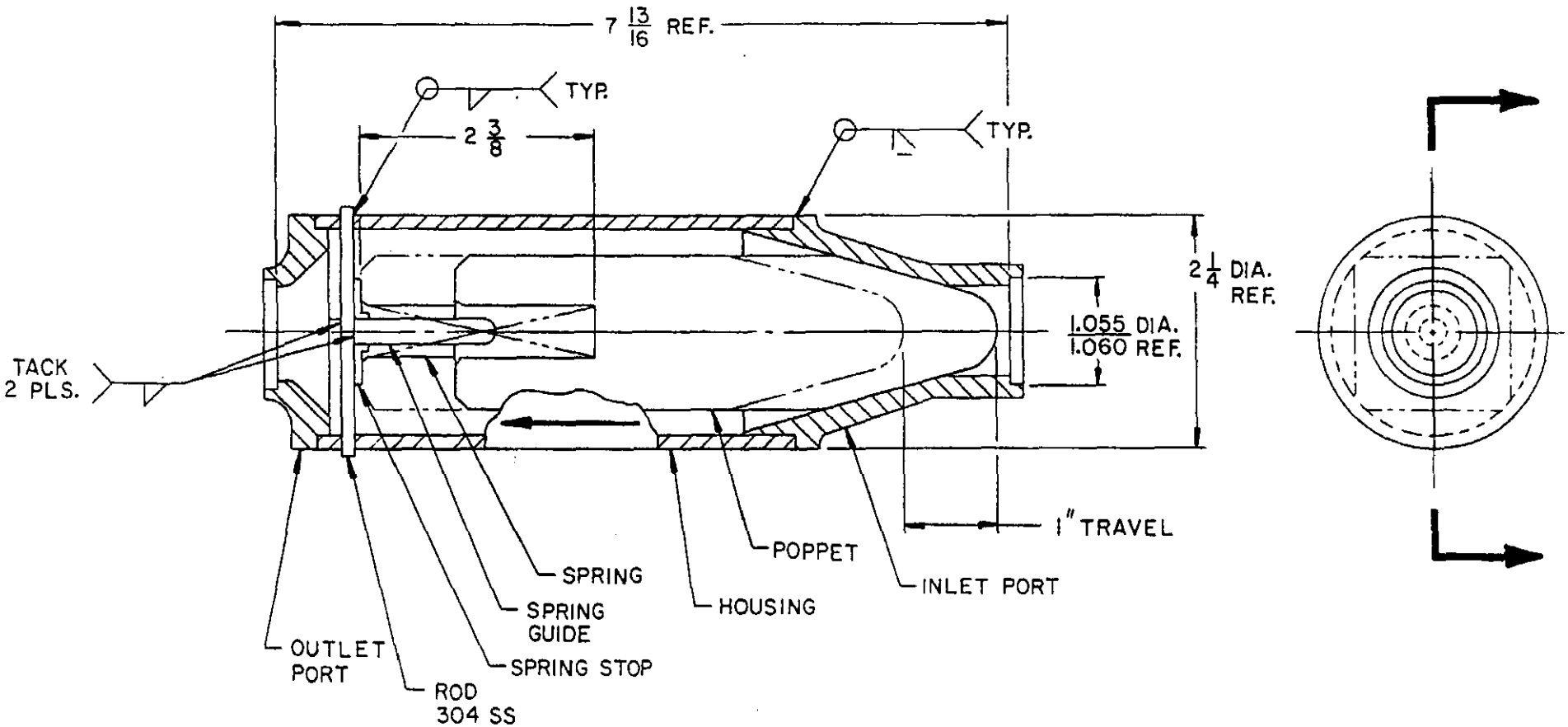

Fig. 5. Check valve for transition from superfluid region of piping.

to the magnet in Figure 1) and connected via a soldered splice of the cable and flanged helium line and vacuum connections. This entire subassembly of two power leads can be easily replaced with a spare one after warmup of the feed can assembly. The power leads consist of a copper rod with a copper fin helically wound around it and brazed to it for good thermal contact. A tight-fitting G-10 tube contains the flow in the helical path. The pressure drop of a few psid for the flows required for high currents (up to 10000 amps) is acceptable due to the 2 to 4 atm pressure flow to the magnet. This results in turbulent flow and good convective heat transfer to the helium gas. The superconductor is contained in the 4.5K shield-flow pipe for a short distance to the ceramic feedthroughs (as indicated in figure 1) where it passes through to the superfluid space.

The vacuum pumping system (Figure 6) consists of a vacuum jacketed transfer line carrying the 4K, low pressure gas from the outlet of JTX to a warmup heat exchanger (not shown in figure 1) and the room-temperature vacuum pumps. Warm, 20 atmosphere helium compressor flow passes through a series of spirally wound coils of finned tubing while the pumped flow passes over these tubes in the shell-side of the heat exchanger. Although the option exists to use the cold, high pressure flow, we simply pass it through a heater and send it back to the compressor interstage.

The two-stages of vacuum pumping consist of: first, an oil injected blower (40 horsepower moter, 1750 RPM, Kinney model KMBD3201) cooled with the same oil as is in our screw compressors, UCON LB165; and second, a compound liquid ring pump (60 horsepower, Kinney model KLRC-951) which also uses UCON LB165. Since this discharges into a line going to our screw compressor suction, only bulk oil knockout is provided. This system is rated for 2.85 g/s of helium flow at 12.3 torr pressure. At about 70 torr and above the blower is off and we pump with the liquid ring pump only.

CONCLUSION

This system has successfully cooled a 17 meter long SSC dipole magnet to 1.77K and powered it to over 7000 amps at that temperature. Cooldown from 4.5K to 1.8K took about 1.5 hours. Numerous tests of SSC dipoles in helium I from 2.3K to 4.5K with various flow rates up to 50 g/s have also been performed.

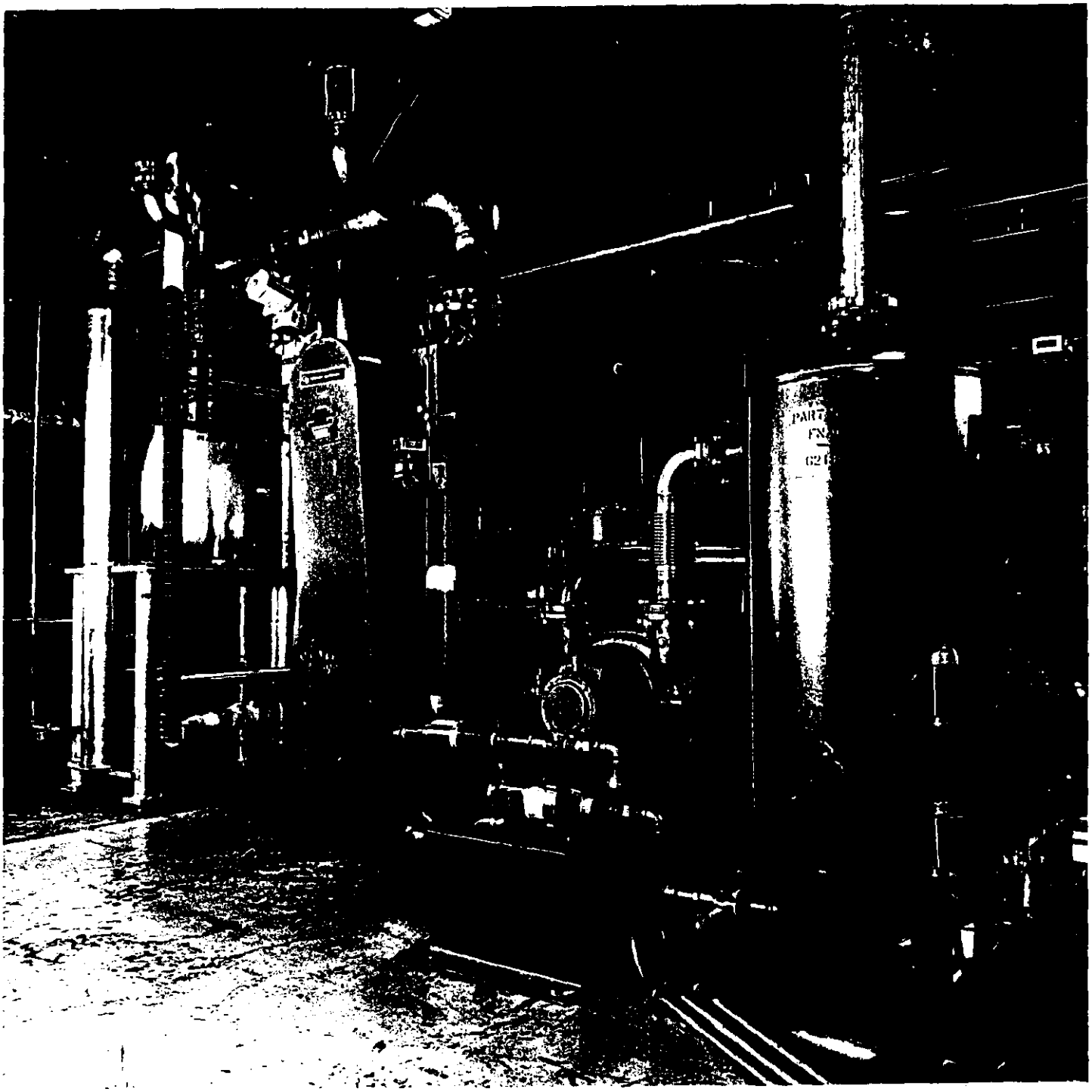

Fig. 6. Photograph of vacuum pumping system

REFERENCES

1. R .K. Barger, et. al., Operational History of Fermilab's 1500 W Refrigerator Used for Energy Saver Magnet Production Testing, in: "Advances in Cryogenic Engineering" Vol. 31, Plenum Press, New York (1986), p. 657.

2. K. McGuire, et. al., Cryogenic Instrumentation of an SSC Magnet Test Stand, in: "Advances in Cryogenic Engineering" Vol. 33, Plenum Press, New York (1988), p. 1063.

3. J. Strait, et. al., Tests of full Scale SSC R&D Dipole Magnets, to be published in the proceedings of the 1988 Applied Superconductivity Conference. Also catalogued as Fermilab TM-1545 and SSC-N-538.

4. R. P. Warren, et. al., A Pressurized Helium II-Cooled Magnet Test Facility, in: "Proceedings of the 8th International Cryogenic Engineering Conference", IPC Business Press, England (1980), p. 373.

5. G. Claudet, et. al., The Design and Operation of a Refrigerator System Using Superfluid Helium, in: "Proceedings of the Fifth International Cryogenic Engineering Conference", IPC Business Press, England (1974), p. 265.

6. F. Haug, et. al., Cryogenics of the 1.8K Test Station for 10 Tesla Superconducting Magnet Models, in: "Proceedings of the 12th International Cryogenic Engineering Conference", Butterworth, Guildford, England (1988), p.

7. M. J. Leupold and Y. Iwasa, Subcooled Superfluid Helium Cryostat for a Hybrid Magnet System, in: Cryogenics, Vol. 26 (November, 1986), p. 579.

8. G. Bon Mardion, et. al., Practical Data on Steady State Heat Transport in Superfluid Helium at Atmospheric Pressure, in: Cryogenics, Vol. 19 (January, 1979), p. 45.