A Smooth Impact Rotation Motor Using a Multi-Layered Torsional Piezoelectric Actuator

Takeshi Morita, Ryuichi Yoshida, Yasuhiro Okamoto, Minoru Kuribayashi Kurosawa, *Member, IEEE*, and Toshiro Higuchi, *Member, IEEE*

***Abstract*—A smooth impact rotation motor was fabricated and successfully operated using a torsional piezo actuator. Yoshida *et al.* [1] reported a linear type smooth impact motor in 1997. This linear motor demonstrated a high output force and a long stroke. A superior feature of the smooth impact drive is a high positioning resolution compared with an impact drive [2]. The positioning resolution of SIDM (smooth impact drive mechanism) is equal to the piezo displacement. The reported positioning resolution of the linear type was 5 nm.**

Our rotation motor utilized a torsional actuator containing multi-layered piezoelectric material. The torsional actuator was cylindrical in shape with an outer diameter of 15 mm, an inner diameter of 10 mm, and a length of 11 mm.

Torsional vibration performance was measured with a laser Doppler vibrometer. The obtained torsional displacement agreed with the calculated values and was sufficient to drive a rotor. The rotor was operated with a saw-shaped input voltage (180 V; 8 kHz). The revolution direction was reversible. The maximum revolution speed was 27 rpm, and the maximum output torque was 56 gfcm. In general, smooth-impact drives do not show high efficiency; however, the level of efficiency of our results (max., 0.045%) could be increased by improving the contact surface material. In addition, we are studying quantitative consideration, for example, about the optimum pre-load or frictional force.

I. Introduction

Ultra-precision machine tools and scanning probe microscopes require a high resolution positioning stage. Piezoelectric material has advantages for a precise positioning actuator; however, the gained strain is too small to achieve a long stroke or rotation drive. Some actuators [1]–[4] have been proposed to overcome this problem. A smooth impact linear motor [1] is one of the superior actuators. Despite its simple construction, this linear actuator demonstrates a long stroke and a high positioning resolution because of its two modes of operation. One mode is for the long stroke drive, and the other is for the positioning drive. After long stroke operation, the precise positioning operation is carried out. DC voltage control to the piezoelectric material is utilized for precise positioning operation; so, the positioning resolution is a few nanometers. Furthermore, output force is large because this linear motor uses a piezoelectric material.

In this paper, a smooth impact rotation motor is proposed. A multi-layered piezoelectric device for torsional motion (torsional actuator) is utilized as a stator. Our focus is on the conversion of the piezoelectric small strain to rotor rotation. Because precise positioning of the drive is easily achieved by DC voltage control, this paper will not focus on this issue. The vibration characteristics of the torsional actuator were measured, and the rotor was successfully rotated.

II. Structure

A rotation smooth impact motor is composed of a torsional actuator attached to a support, a pre-load mechanism, and a rotor. As shown in Fig. 1, the torsional actuator is made of multi-layered piezoelectric material with an outer diameter of 15 mm, an inner diameter of 10 mm, and a length of 11 mm. There are 20 layers, and each ceramic layer is 0.5 mm thick. Parameters related to the piezoelectric material are shown in Table I. A distinctive feature of this device is that the poling directions are aligned in a circumferential direction to excite torsional movement.

For the poling treatment, some complicated fabrication processes were carried out. First, each thin ceramic element was cut and divided into eight parts in a circumferencial direction, and temporal electrodes were deposited in these sections to supply a high electrical field. After the poling treatment, temporal electrodes were removed, and each part was glued to form the previous cylindrical shape. Finally, the thin ceramics disks were stacked with thin metal electrodes by an adhesive. The poling directions of upper and lower layers were reversed as shown in Fig. 1. The supplied electrical field was perpendicular to the poling direction. Therefore, the thrust force was generated according to the k_{15} coupling factor effect. The thrust force results in torsional deformation.

Fig. 2 shows a cross-section of the motor composed of the torsional actuator, the rotor, and the pre-load mechanism. The rotor is made of brass, and the contact surface of the torsional actuator was plastic. Fig. 3 shows a photograph of the motor. The rotor is pressed to the upper surface of the torsional actuator by a spring. The pre-load is controlled by the position of a nut. The rotor is connected to a stator shaft through a bearing; so, only the

Manuscript received October 8, 1998; accepted June 10, 1998.

T. Morita, M. K. Kurosawa, and T. Higuchi are with the Department of Precision Machinery Engineering, Graduate School of Engineering, The University of Tokyo, 7-3-1 Hongo, Bunkyo-ku, Tokyo 113, Japan (e-mail: tmorita@riken.go.jp).

R. Yoshida and Y. Okamoto are with Production Engineering Div. Image Information Production Manufacturing H.Q. Minolta Co. LTD, 3-91 Daisennishi-machi, Sakai-shi, Osaka 590, Japan.

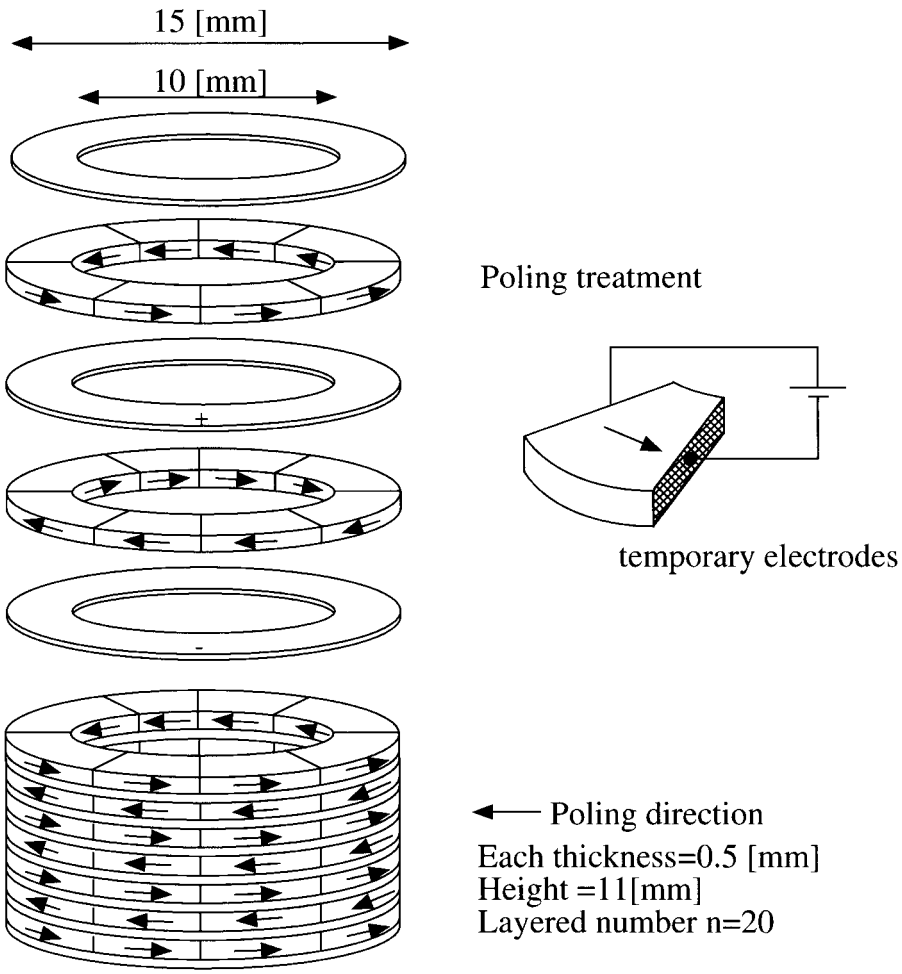

Fig. 1. Torsional actuator (fabrication process).

TABLE I
PARAMETERS OF PIEZOELECTRICAL MATERIAL USED FOR TORSIONAL ACTUATOR.

k_p	0.65
k_{33}	0.72
k_{13}	0.36
k_{15}	0.69 (Blank in catalog; so, this data was that of PZT 5A)
c_{11}	5.0×10^{10} N/m^2
c_{13}	6.1×10^{10} N/m^2
c_{15}	2.1×10^{10} N/m^2
$\varepsilon_{33}^{\tau}/\varepsilon_0$	4300
$\tan_\delta$	2.1%
Q factor	50
Curie temp.	210°C

rotor part is driven, as will be mentioned later. The bottom part of the torsional actuator is strongly fixed by a vise.

III. Principle

The principle of this motor is a smooth impact drive. The smooth impact drive possesses two operation modes. One mode, which we call "the precise positioning drive mode," is simply operated by applying DC input voltage to a torsional actuator. The torsional angle of the stator is proportional to the input voltage. Frictional force prevents the rotor from slipping, and the rotor moves together with the upper surface of the stator. The precise positioning mode is easier, therefore, to achieve than what we call the "rotation drive mode." In this paper, we deal with the rotation drive mode, which corresponds to a long stroke drive of linear motor.

The rotation drive mode is our primary interest. In our motor operation, the input electric source is saw shape,

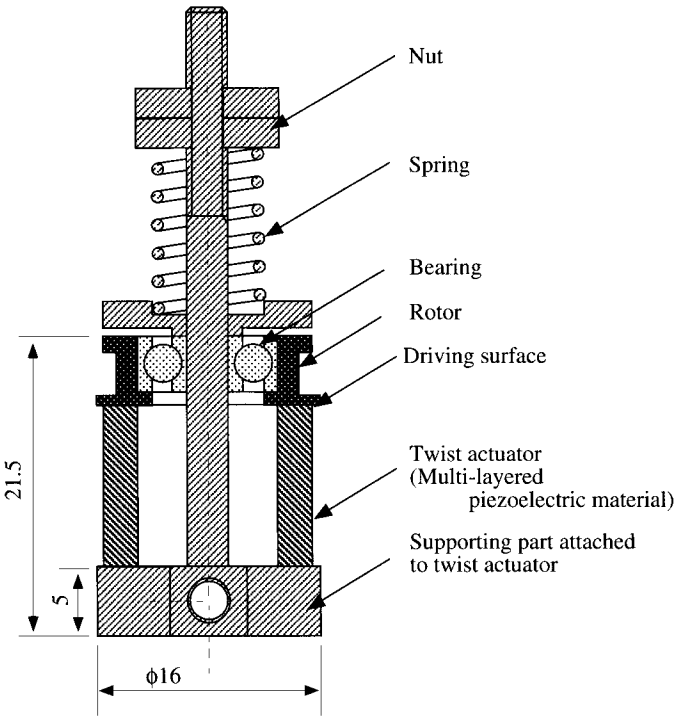

Fig. 2. Cross-section of the motor.

meaning that the input voltage is composed of a "slow increase part" and a "rapid decrease part," as is shown in Fig. 4. The circumferential displacement of the upper surface is proportional to the input voltage if a cycle of saw shape is below the first fundamental resonance frequency. The saw-shaped input voltage generates alternating slow and rapid torsional movement.

The torsional actuator drives the rotor by frictional force when the input voltage is the "slow increase part" of the saw shape. The rotor and the upper surface of the stator are attached by frictional force and move together. With the "rapid decrease part" in saw-shaped input voltage, the rotor cannot follow the quick surface movement and slips on the surface of the torsional actuator. As a result, only the torsional actuator is returned to its previous position. At the end, the rotor movement is equivalent to the slipped distance with rapid torsional drive. By repeating these operations, the rotor could be rotated.

IV. Estimation

A high velocity for the actuator is important for slip phenomenon during the rapid movement. The large strain of torsional actuator and the higher driving frequency is effective for the smooth impact drive. The driving frequency depends on the resonance frequency. In this section, the relationship between strain and the input voltage is estimated. This relationship is important because the strain gained by the piezoelectrical material is very small.

First, the torsional angular displacement with one layer is calculated; then, the total deformation is determined

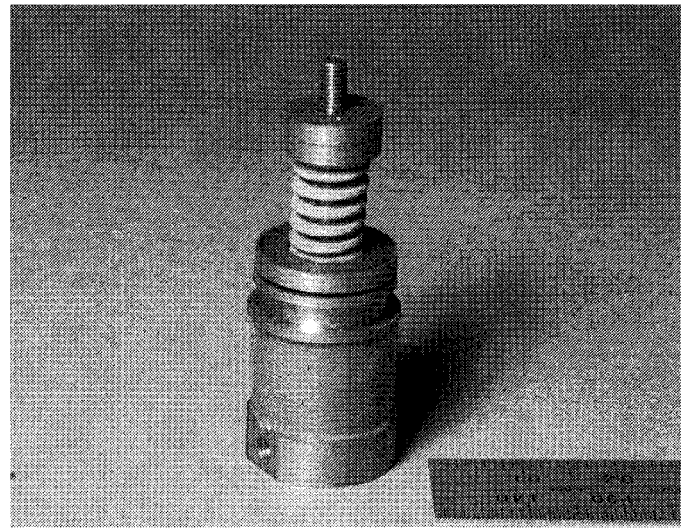

Fig. 3. Photo of the motor.

by multiplying this value by the number of layers. The mechanical energy E_m of the cylindrical torsional angular displacement is expressed as

$$E_m = \frac{\pi c_{15} l}{2} \left(\frac{\theta}{l}\right)^2 \left(b^4 - a^4\right) \tag{1}$$

where a, b, l, c_{15}, and θ express the outer radius, the inner radius, the length, the modules of rigidity, and the torsional angle, respectively. The torsional angle is caused by the piezoelectric effect. The electrical energy E_e applied to cylindrical-shaped capacitance is expressed as

$$E_e = \frac{1}{2}\varepsilon_0 \varepsilon^T \left(\frac{V}{l}\right)^2 \pi \left(b^2 - a^2\right) l \tag{2}$$

where ε^T is the relative dielectric constant, and V is supplied voltage. The equations, (1) and (2) are related by the electro-mechanical coupling factor k_{15}. Namely, $E_m = E_e k_{15}^2$. So, the relationship between torsional angular displacement and the input voltage is expressed as

$$\theta = \sqrt{\frac{k_{15}^2 \varepsilon_0 \varepsilon^T}{c_{15}\left(a^2 + b^2\right)}} V. \tag{3}$$

Gained displacement of outer position was expressed as $a\theta$, and the multi-layered piezoelectric material magnifies the strain by the layered number n. Thus, the displacement at the upper part of outer side wall is expressed as

$$an\theta = n\sqrt{\frac{a^2 k_{15}^2 \varepsilon_0 \varepsilon^T}{c_1 5\left(a^2 + b^2\right)}} V. \tag{4}$$

In the case of the torsional actuator, the parameters shown in Table II result in a displacement per unit voltage of 15.6 nm. The coupling factor k_{15} is unspecified; so, the typical value (69%) of soft PZT (PZT-5A) was substituted. There are piezoelectric materials whose coupling factor k_{15} is more than 70%. The module of rigidity c_{15} is calculated

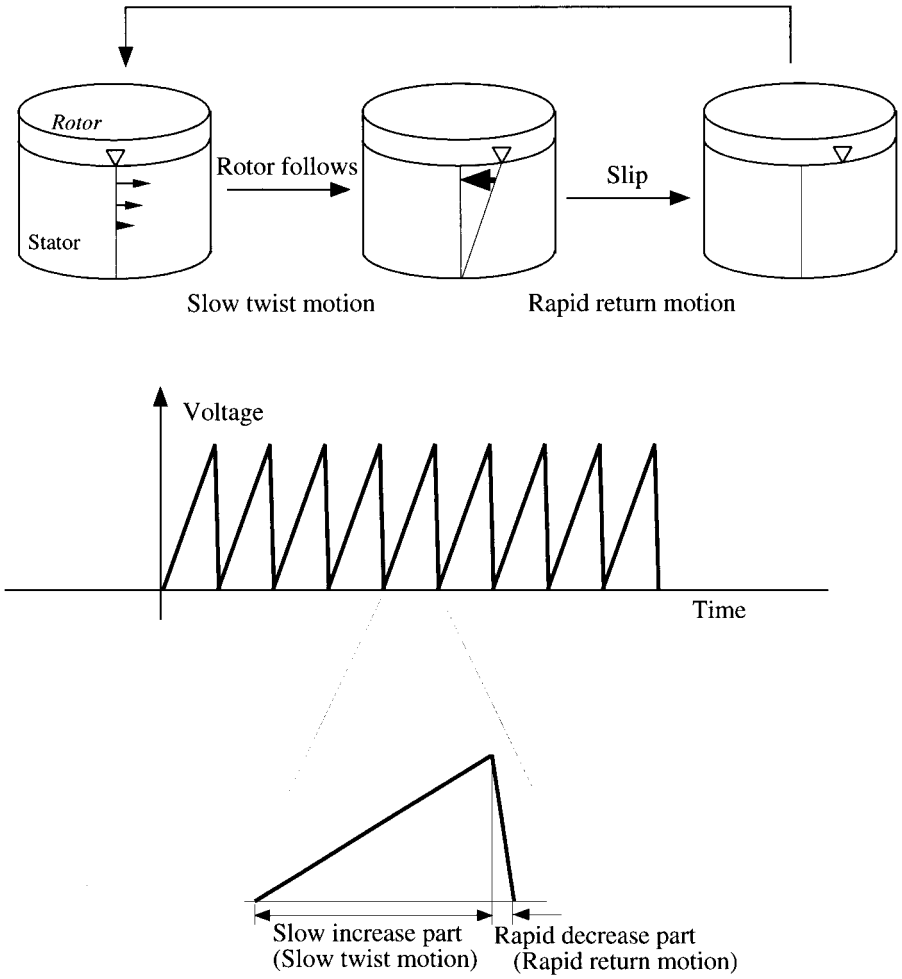

Fig. 4. Rotation principle with the saw-shaped input voltage.

TABLE II
SHAPE PARAMETER OF TORSIONAL ACTUATOR.

An outer radius	a	7.5 mm
An inner radius	b	5.0 mm
Thickness of each layer	l	0.5 mm
Multilayered number	n	20

to be 2.07×10^{10} N/m^2 using $c_{15} = 3Y/8$ [5], where Y is Young's modules. PZT is an anisotropic material that has two Young's modules c_{11} and c_{33}. To calculate c_{15}, the average value, $(c_{11} + c_{33})/2$ was used as Y.

From the results of this calculation, it can be determined that a 100 V input voltage results in a 1.6 μm displacement. Based on the results of a previous study [1], this displacement is sufficient for a smooth impact drive, and a 100 V input voltage appears to be a practical value.

V. Experiments and Results

A. Resonance Frequency and Vibration Mode

The characteristics of the torsional actuator were measured using a laser Doppler vibrometer as shown in Fig. 5. The bottom part of the torsional actuator was fixed strongly by a vise. The rotor and pre-load mechanism were not attached during these experiments. The laser was irradiated to the top of the side wall, and the relationship between the vibration amplitude and the driving frequency was measured. The adopted Doppler vibrometer is for velocity measurements in a direction perpendicular to that of the laser irradiation. The input voltage was 1.0 V and sine-shaped. As shown in Fig. 6, the resonance frequency of the torsional vibration mode was 18 kHz, and the vibration amplitude was almost flat below 15 kHz. The quality factor was calculated to be 50, which means that this material is a soft-type piezoelectric material. The torsional displacement at the outer point was 15 nm per unit of input voltage.

To confirm the vibration mode, the laser spot was scanned from the bottom to the top. The vibration amplitude was measured at each position as shown in Fig. 7. The driving frequency was 7 kHz, and the input voltage was 30 V. As illustrated in Fig. 8, the x-axis refers to the distance from the bottom surface of irradiated point. The measured displacement shows that the torsional displacement was magnified proportionally by multiple layering. The fixing force of the vise was sufficient to hold the tor-

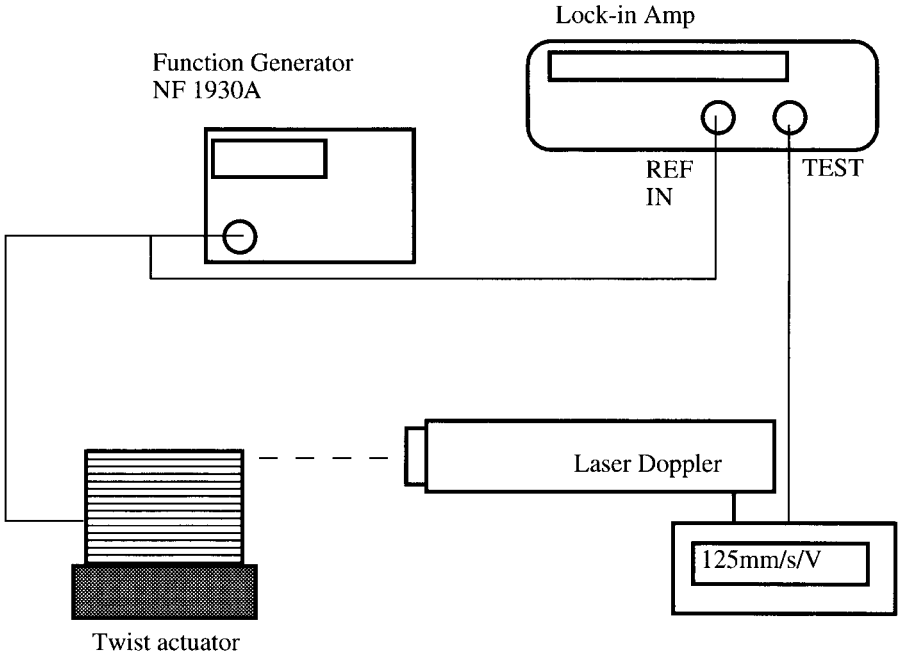

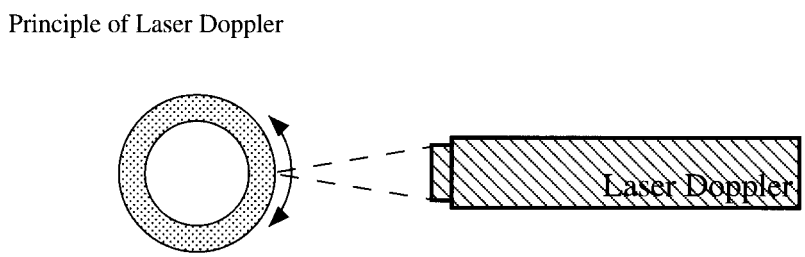

Fig. 5. Measuring system for the relationship between torsional vibration amplitude and driving frequency.

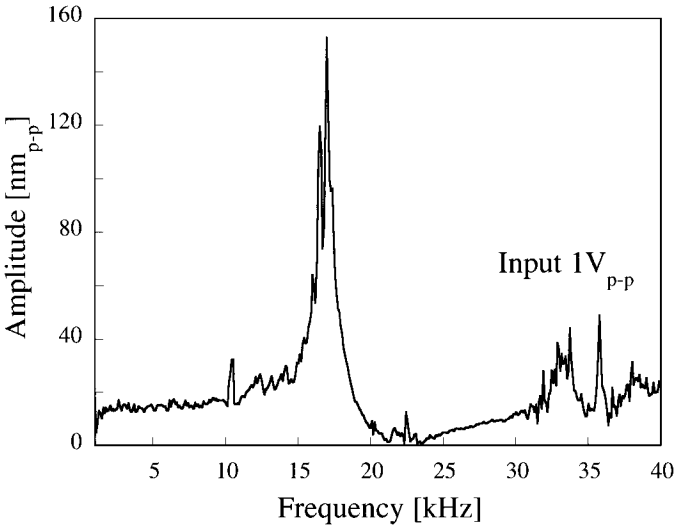

Fig. 6. The relationship between torsional vibration amplitude and driving frequency.

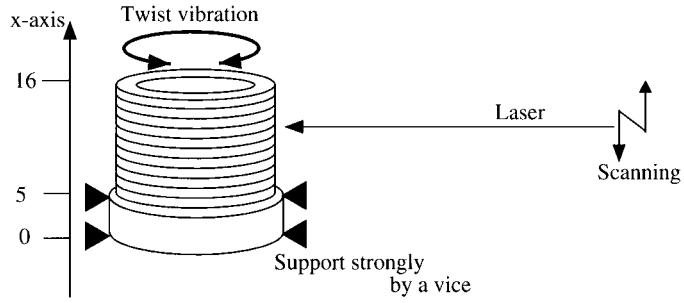

Fig. 7. Measuring system for vibration mode.

sional actuator.

B. Saw-Shaped Input Voltage

Saw-shaped torsional displacement is essential for a smooth impact drive. For a high-speed rotor drive, a high driving frequency is effective. Near the resonance frequency drive, however, the saw-shaped input voltage can-

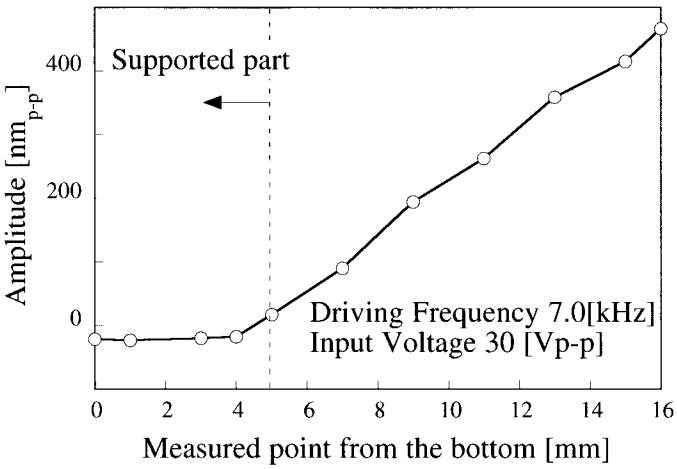

Fig. 8. The torsional vibration mode.

not be converted exactly to a torsional vibration. Because only the fundamental frequency vibration surpasses other frequency vibrations that compose the saw-shape. As indicated previously, the resonance frequency was 18 kHz. The relationship between torsional displacement and the driving frequency was measured when the input voltage was saw shaped. The input voltage was fixed to 5 V_{o-p}. As shown in Fig. 9(a), the saw-shaped torsional displacement was achieved with a lower driving frequency of 1 kHz. With the upper driving frequency (for example, 7 kHz), the input voltage shape and displacement shape were almost proportional as shown in Fig. 9(b). In contrast, when the driving frequency was 13 kHz, which was near the resonance frequency, the torsional displacement was sine shaped, which was caused by a resonance phenomenon as shown in Fig. 9(c). From these results, it can be seen that the driving frequency of saw-shaped input voltage is limited to 13 kHz. The results of the rotation drive experiments indicated that the suitable driving frequency ranges from 7 to 8 kHz.

C. Rotation Characteristics

The rotor pressed to the torsional actuator was operated with rotation drive mode. The pre-load was 2.0 kgf, and the peak voltage of the saw-shaped input voltage was 180 V. The driving frequency was 8.0 kHz, which was almost one-half the resonance frequency. Based on the torsional displacement and the input voltage, the revolution speed for these experimental conditions can be calculated to be 28.5 rpm.

The rotation characteristics were measured with a laser Doppler vibrometer. A laser beam was irradiated to the mirror attached to the rotor. This laser Doppler vibrometer measures displacement in the same direction as the laser irradiation. The time range was 5 msec, and the total displacement was only 100 μm; so, the rotation angle could be estimated to be proportional to the measured displacement. The rotor was successfully driven by frictional force, and the rotating direction was reversible by changing the driving voltage shape. As indicated in Fig. 10, the result shows that, as expected, the rotor movement exhibited step motions.

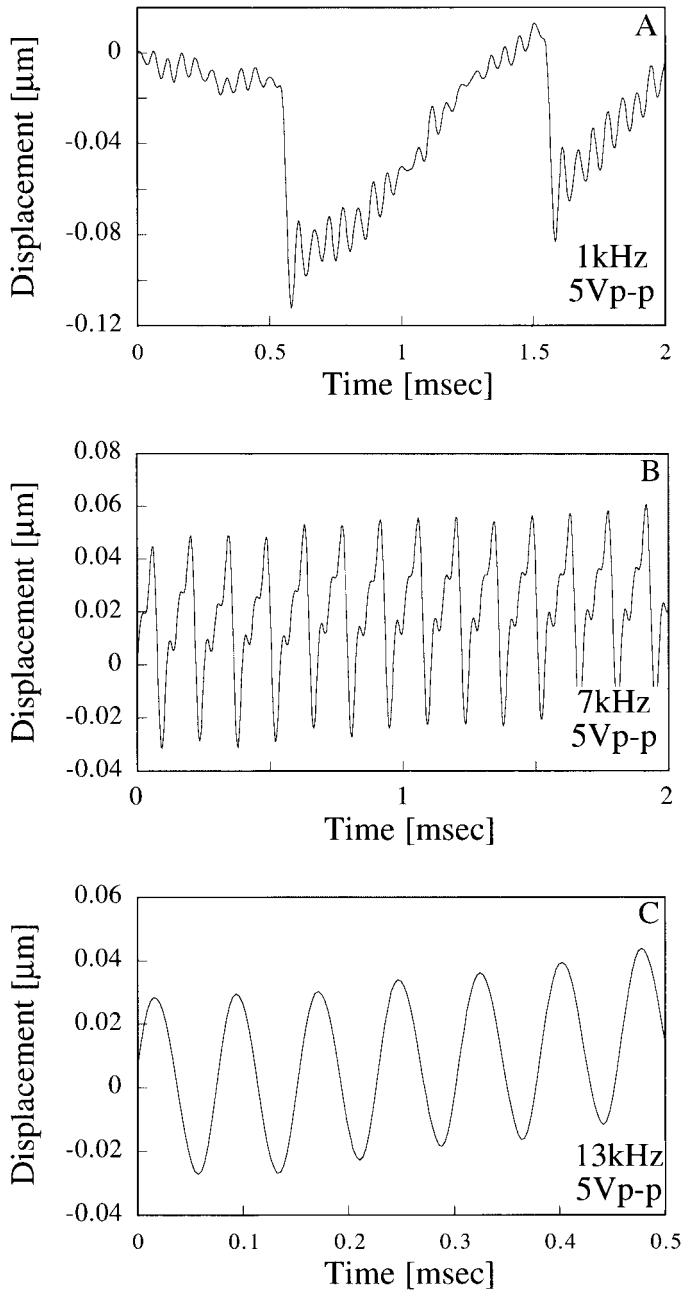

Fig. 9. Torsional vibration shape versus times by saw-shaped input voltage. A) 1 kHz, B) 7 kHz, C) 13 kHz.

The relationship between load and speed was also measured. The weight was suspended with a thread at the rotor output axle. The diameter of the rotor output axle was 13 mm. As shown in Fig. 11, the maximum revolution speed was 26 rpm, and the maximum output torque was 56 gfcm.

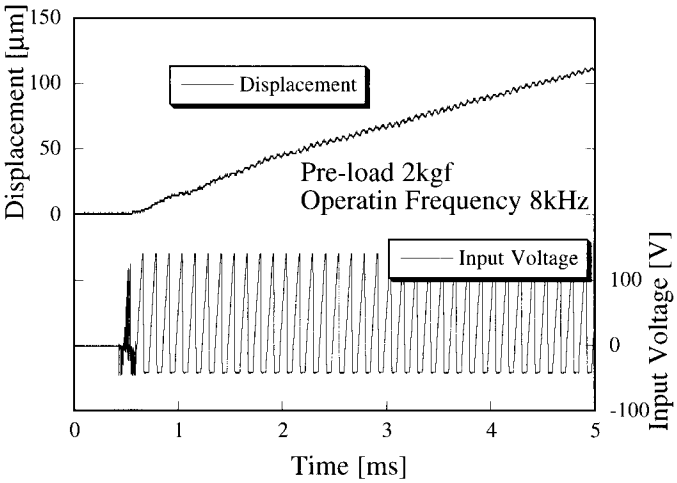

Fig. 10. Step motion result with the saw-shaped input voltage.

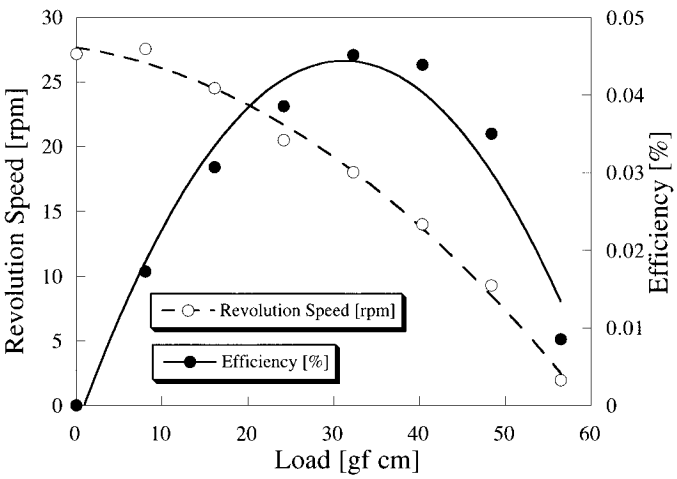

Fig. 11. The revolution speed and efficiency with 2 kgf pre-load.

VI. Conclusions

The torsional actuator was fabricated, and its characteristics were measured. The resonance frequency was 18 kHz, and the displacement per unit voltage was 15 nm. The displacement results were almost the same as the calculated value, 15.6 nm. With a saw-shaped input voltage, the pressed rotor was driven in the indicated direction, and the moving direction was reversible. The driving frequency was 8 kHz and the input voltage was 180 V. The measured revolution speed was the same as that calculated from the experimental torsional displacement and input voltage results. With improvements in the driving surface material, larger output torque and higher efficiency could be achieved in the future.

References

[1] Y. Okamoto and R. Yoshida, "Development of linear actuator using piezoelectric element," *Trans. Inst. Electron., Inform. Commun. Eng. A*, Vol. J80-A, no. 10, pp. 1751–1756, 1997.

[2] T. Higuchi, M. Watanabe, and K. Kudoh, "Precise positioner utilizing rapid deformation of a piezo electric element," *J. Jpn. Soc. Precis. Eng.*, vol. 54, no. 11, pp. 2107–2112, Nov. 1988.

[3] K. Ohnishi, M. Umeda, M. Kurosawa, and S. Ueha, "Rotary inchworm-type piezoelectric actuator," *Trans. IEEE Jpn.*, vol. 110-D, no. 1, pp. 51–58, 1990.

[4] K. Nakamura, M. Kurosawa, S. Ueha, M. Umeda, and K. Ohnishi, "Precise positioning control by a hybrid transducer type ultrasonic motor," *Trans. IEEE Jpn.*, vol. 111-C, no. 9, pp. 462–469, 1991.

Takeshi Morita was born in 1970. He received the B. Eng., the M. Eng. and the Dr. Eng. degree in precision machinery engineering from University of Tokyo, Japan in 1994, 1996, and 1999, respectively. He is Special Postdoctoral Researcher of the Institute of Physical and Chemical Research (RIKEN) since April 1999. His research interests are gyroscope, micro-ultrasonic motor, and PZT thin film deposition process.

Ryuichi Yoshida was born in 1967 and received the B. S. degree in chemical engineering from Osaka University, Japan, in 1989. He entered Minolta Co., LTD. in 1989 and currently belongs to Production Engineering DIV.

Yasuhiro Okamoto was born in 1960 and received the B. S. degree in mechanical engineering from Tokushima University, Japan, in 1983. He entered Minolta Co., LTD. in 1983 and currently belongs to Production Engineering DIV.

Minoru Kurosawa (formerly Kuribayashi) (M'95) was born in 1959. He received the B. Eng. degree in electrical and electronic engineering and the M. Eng. and Dr. Eng. degrees from Tokyo Institute of Technology, Tokyo, in 1982, 1984, and 1990, respectively. He was a research associate at the Precision and Intelligence Laboratory, Tokyo Institute of Technology, Yokohama, Japan, from 1984. Then, he was an associate professor at Graduate School of Engineering, University of Tokyo, from 1992 to 1999. Since 1999, he has been an associate professor at Interdisciplinary Graduate School of Science and Engineering, Tokyo Institute of Technology. His current research interests include ultrasonic motor, micro actuator, PZT thin film, SAW sensor and actuator, and 1-bit digital control system.

Toshiro Higuchi (M'87) was born in 1950. He received the B. S., M. S., and Dr. Eng. degrees in precision engineering from University of Tokyo, Japan, in 1972, 1974, and 1977, respectively. He was a lecturer at the Institute of Industrial Science, University of Tokyo, from 1977 to 1978, and an associate professor from 1978 to 1991. Since 1991, he has been a professor in the Department of Precision Engineering, University of Tokyo. His research interests include mechatronics, magnetic bearing, electrostatic actuator, and stepping motors robotics and manufacturing.