Delft University of Technology

Clutched elastic actuators

Plooij, Michiel; Wolfslag, Wouter; Wisse, Martijn

DOI
10.1109/TMECH.2017.2657224

Publication date
2017

Document Version
Accepted author manuscript

Published in
IEEE - ASME Transactions on Mechatronics

Citation (APA)
Plooij, M., Wolfslag, W., & Wisse, M. (2017). Clutched elastic actuators. *IEEE - ASME Transactions on Mechatronics*, *22*(2), 739 - 750. https://doi.org/10.1109/TMECH.2017.2657224

Important note
To cite this publication, please use the final published version (if applicable).
Please check the document version above.

Copyright
Other than for strictly personal use, it is not permitted to download, forward or distribute the text or part of it, without the consent of the author(s) and/or copyright holder(s), unless the work is under an open content license such as Creative Commons.

Takedown policy
Please contact us and provide details if you believe this document breaches copyrights.
We will remove access to the work immediately and investigate your claim.

This work is downloaded from Delft University of Technology.
For technical reasons the number of authors shown on this cover page is limited to a maximum of 10.

Author's version
To be published in: Transactions on Mechatronics
DOI: 10.1109/TMECH.2017.2657224

Clutched Elastic Actuators

Michiel Plooij† , Wouter Wolfslag, Martijn Wisse
Delft University of Technology

***Abstract*—This paper identifies the class of actuators called clutched elastic actuators (CEAs). CEAs use clutches to control the energy flow into springs. CEAs in exoskeletons, prostheses, legged robots and robotic arms have shown the ability to reduce the energy consumption and motor requirements such as peak torque and peak power. Because of those abilities, they are increasingly used in robotics. In this paper, we categorize existing CEA designs, identify trends in those designs and provide a method to analyze their functionality. Based on a literature survey, current CEA designs are placed in nine categories, depending on their morphology. The main trend is that CEA designs are becoming more complex, meaning that the number of clutches and springs increases. We show with the introduced mathematical analysis that the functionality can be analyzed with a constraint matrix, a stiffness matrix and multiplication of a clutch dependent diagonal matrix with an oriented incidence matrix. This method eases the analysis of the functionality of CEAs. Furthermore, it can lead to new CEA designs in which the number of resulting stiffnesses grows exponentially with the number of springs and clutches.**

I. Introduction

In autonomous robots, energy consumption is an important performance criterion, because this directly influences their uptime. Clear examples include walking robots [1], household robots [2], prostheses [3, 4] and orthoses [5, 6]. One of the most effective techniques to obtain a low energy consumption is the efficient recapture of negative work. There are multiple options to store the energy recaptured from the robot (e.g. electrical, chemical, potential, etc.), of which potential energy is the most promising in terms of efficiency. This efficiency can even approach 100 %. Compared to other potential energy storages, springs are relatively compact and therefore preferred. Actuators that use springs to temporarily store energy are called elastic actuators (EAs). The two most well known EAs are series elastic actuators (SEAs) [7] and parallel elastic actuators [8, 9] (PEAs).

The problem of EAs is that the timing of energy storage and release is not independently controllable from the position of the joints and/or motor. This lack of control limits the versatility of robots with EAs, especially when using PEAs. For example, Shirata et al. [10] designed a walking robot with a leg that includes a spring mechanism to statically balance the robot when standing on that leg. During the stance phase, this spring mechanism reduces the torques that the motors have to deliver. However, during the swing phase, the motors have to counteract these springs. If the stiffness of those springs would be fully controllable, the stiffness could be eliminated during the swing phase.

† Corresponding author: M.C. Plooij, Delft Robotics Institute, Faculty of Mechanical Engineering, Delft University of Technology, Mekelweg 2, 2628 CD Delft, The Netherlands Email: m.c.plooij@tudelft.nl

In recent years, the use of clutches in EAs has become popular as a tool to control the energy flow in springs. We call such EAs clutched elastic actuators (CEAs). Such CEAs have mostly been applied in legged robots [11–14], underactuated systems [15] and robotic arms [9]. An alternative for using clutches to control the energy flow in the springs is the use of continuously variable transmissions (CVTs). CVTs have mainly been used to control the stiffness of springs in series with the motor [16, 17]. In principle, such CVTs could also be used to control the stiffnesses of parallel springs. With a CVT, the energy flow of the springs would become fully controllable [18]. However, current CVT designs are not developed enough to be applicable. They are typically based on a wheel rolling on a surface, meaning that in order to be able to transfer high forces, the wheel should be pushed strongly against the surface to prevent slip perpendicular to the rolling direction. This increases the friction in the overall system, leading to a limited life time due to wear and a low energy efficiency. Furthermore, it makes it difficult to vary the transfer ratio. Clutches are inherently simpler components, because they switch between completely locking and unlocking. Furthermore, they are widely available in various forms [19].

Different applications require different functionalities from their CEAs and thus various types of CEAs have been designed. However, the full capabilities and limitations of CEAs have never been studied. Having a method to analyze the functionality of CEAs will become increasingly important, due to their increasing complexity. We envision future CEAs consisting of many springs and many clutches. Such CEAs show resemblance with human muscles that consist of many elastic fibers and locking mechanisms (i.e. myosin proteins that bind to actin proteins [20]). In order to prepare for those future CEAs, we provide a method to categorize and analyze both existing and future CEA designs.

Therefore, the goal of this paper is twofold. The first goal is to categorize existing CEA designs and to identify trends in those designs. The second goal is to introduce a method to analyze functionalities of all possible CEA designs. These goals are reached using the following structure. Section II gives a definition of CEAs and their components. Section III provides an overview of existing CEA designs and identifies trends. Section IV evaluates how we can define what functionalities a certain CEA design incorporates. Section V then provides a method for analyzing the functionalities in CEAs. Synthesis and different configurations of CEAs are discussed in section VI. Finally, the paper ends with a discussion in section VII and a conclusion in section VIII.

© © 2017 IEEE. Personal use of this material is permitted. Permission from IEEE must be obtained for all other uses, in any current or future media, including reprinting/republishing this material for advertising or promotional purposes, creating new collective works, for resale or redistribution to servers or lists, or reuse of any copyrighted component of this work in other works.

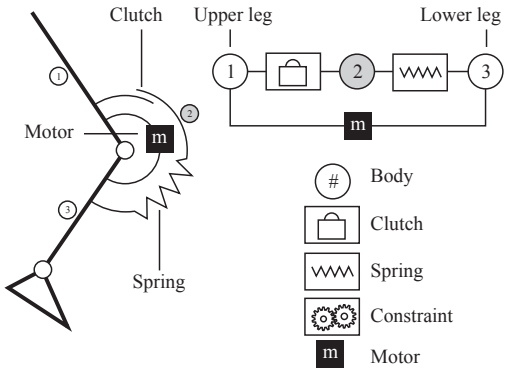

Figure 1. An example of a CEA, showing the visualization that is used in this paper. CEAs consist of bodies that are connected with clutches and springs. In the leg on the left, one spring is placed in series with a clutch between the lower and the upper leg. A motor is also placed between the lower and the upper leg. The schematic on the right shows a visualization of this mechanism. Body 1 represents to the upper leg and body 3 represents to the lower leg. Body 2 is an internal body in between the clutch and the spring and is therefore visualized in grey. Note that this example does not include a constraint, to keep the example simple.

II. Components of CEAs

In this section, we briefly define both the terminology and the visualization we use in this paper. We define CEAs as all mechanisms that consist of at least one spring and one clutch and possibly incorporating gears, differentials or motors. Note that motors are an optional part of CEAs, because the clutches are already used to control the torque. This ability to control the torque is what makes the mechanism an actuator. All components of the CEA are connected to bodies that have a continuous state (position and velocity).

A *spring* is an elastic element and in this paper we assume that it has two connections. The potential energy in the spring is a function of the positions of its connections. A *clutch* is a locking device that switches between allowing and preventing relative motion between two bodies [19]. This means that when the clutch is engaged, the relative velocity between the two bodies is zero. In this paper, we consider all clutches to be ideal locking mechanisms as defined in [19]. This means that we disregard the differences between locking mechanisms such as brakes, ratchets, latches, non-backdrivable gearing and singular locking mechanisms. Section VII-C will discuss how different locking mechanisms might be included in future work. A *gear* determines a constant transfer ratio between two bodies. A generalized version of a gear is a *differential*, which imposes a linear velocity *constraint* on two or more bodies.

Fig. 1 shows an example CEA in a robotic knee on the left and the schematic visualization of this CEA on the right. The CEA consists of one spring and one clutch. The spring is placed in series with the clutch. The clutch-spring combination and the motor are placed between the upper and the lower leg. This mechanism has three bodies: body 1 represents the upper leg, body 3 represents the lower leg and body 2 is the position of the connection between the spring and the clutch. Since this is an internal body of the mechanism, we visualize it as a circle with a grey background.

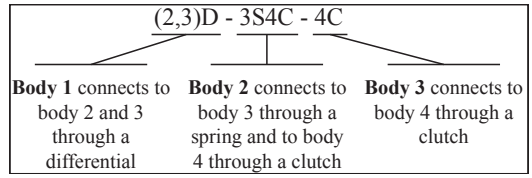

Figure 2. Explanation of the names that we use in the taxonomy. The strings between the dashes denote how the subsequent bodies connect to other bodies.

We exclude motors from the categorization of CEAs because we want to focus on the behavior of the clutches and the elasticity. In the next section, we will occasionally mention and visualize motors in order to increase the understanding of how CEAs are applied. Since motors are used in various ways by researchers (as position source or force source), we will mention those various usages throughout this paper.

Note that in the proposed representation, all body positions are absolute positions, while in most applications the relative position is actuated. This means that in this representation, the bodies can still move, while the relative position is locked (e.g. the knee being locked in Fig. 1).

III. Current CEA designs

The goal of this section is to provide a taxonomy for CEA designs and to identify trends in the use of CEAs. We performed a literature survey by searching for papers that include either 'clutch', 'latch', 'locking mechanism' or 'lock' and 'spring', 'elasticity' or 'compliance'. We also searched the references of the papers we found.

We categorize the CEAs based on their morphology and briefly discuss the results that were achieved by implementing them. Existing CEAs can be subdivided into nine types, see Fig. 3. In this section we discuss the types in Figs. 3a, b, c, d and e, because they are used most and are significantly different from each other.

The names that we use in the taxonomy uniquely describe their morphology, excluding other components such as motors. Per body, we describe how that body connects to a body with a higher number. For instance, body 1 in the CEA in Fig. 1 connects to body 2 through a clutch. Therefore, its name starts with 2C, where the numbers indicate the bodies it connects to and the C indicates a clutch. The connections of different bodies are separated by a dash. Since body 2 connects to body 3 through a spring, the name for the CEA in Fig. 1 is 2C-3S. Differentials are denoted by the numbers of the connecting bodies between brackets, followed by a D (see Fig. 3c). The names of the CEA in Fig. 3c is also visualized explained in Fig 2. When desired, motors could be added to the taxonomy, denoted by the letter M. Here we chose to omit the motors to keep the amount of families small. Note that in more complex CEA designs, these family names become inconveniently long for regular use. Therefore, we propose to give mechanisms their own name in future work, while

refering to their family name once. Also note that the name changes by changing the numbering of the bodies.

A. Type 2C-3S

The first type of CEA we discuss, consists of a spring placed in series with a clutch and has three bodies (see Fig. 3a). In most type 2C-3S CEA designs, body 1 connects to one side of the joint and body 3 connects to the other side. When the CEA also includes a motor, that motor is usually also placed between bodies 1 and 3. When the clutch is locked, bodies 1 and 2 are connected and the elongation of the spring depends on the relative motion of body 1 and 3. Therefore, the CEA functions as a PEA when the clutch is locked. When the clutch is unlocked, the position of body 2 does not depend directly on the position of the output bodies and the spring goes to its equilibrium position. Therefore, only the motor applies forces to the output bodies when the clutch is unlocked, making it a regular motor.

Type 2C-3S CEAs have been applied both in parallel to a motor [21–24] and without a motor [25–32]. There are four studies with a completely different implementation of this type of CEA. Two designs placed this CEA in series with a motor instead of in parallel [33, 34]. One design placed the motor between bodies 1 and 2, such that the rotation of the motor can be locked [35]. And another design used bodies 1 and 2 as output bodies [36] . Then, by placing a motor between body 1 and 3, they can load the spring while not applying torque on the output joint.

This type of CEA has been used most widely, even multiple times in parallel [32]. The results show that even the implementation of a simple CEA can lead to significant reductions of the energy consumption, peak torque and peak power, both in robots and in humans. In walking robots and exoskeletons, implementation of such a CEA has been shown the ability to reduce the electric energy consumption of walking robots and exoskeletons up to 80 % [21, 33]. In humans, a reduction of the metabolic cost of transport by 7 % was achieved [31].

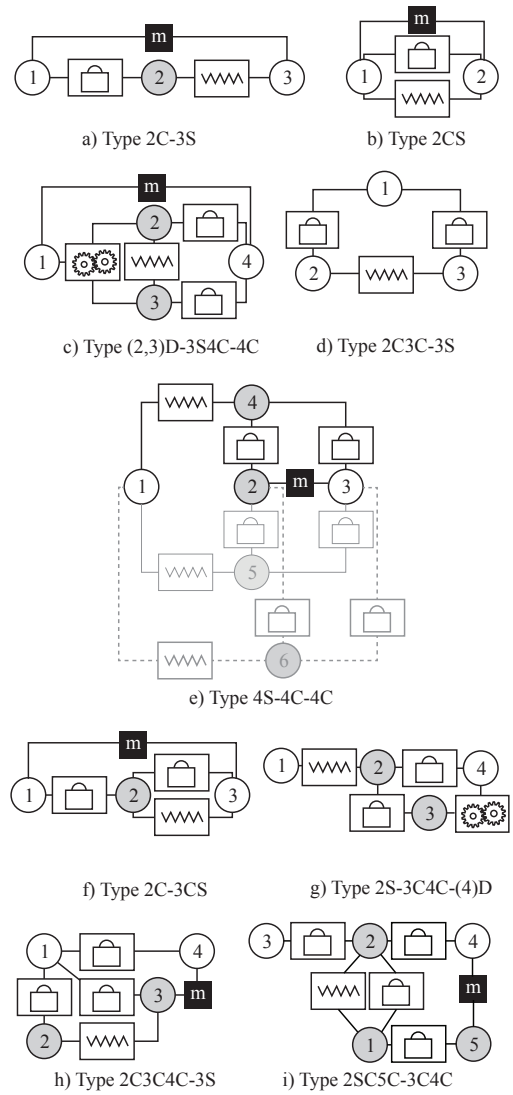

Figure 3. The nine different types of CEAs used in literature. The output bodies and the placement of the motor are visualized in the most used form in literature. The white bodies are the output bodies. In i), three modules of a series parallel elastic actuator are visualized. Two modules are shown in black and one module is shown in grey.

B. Type 2CS

The second type of CEA in literature consists of a spring in parallel with a clutch (see Fig. 3b). Typically, the CEA also includes a motor in between the two bodies. When the clutch is locked, bodies 1 and 2 are connected and thus the output is locked. When the clutch is unlocked, the output bodies are not coupled directly and both the motor and the spring apply a force on the output bodies. This type of CEA can be used when the joint has to stand still while the spring is loaded. The 2CS type has been used to lower the energy consumption of robotic arms [9], to insert the same amount of energy in every step of a walking robot [37] and to switch between a rigid and soft connection between a human and a backpack [38].

C. Type (2,3)D-3S4C-4C

The third type of CEA we discuss, has four bodies, one spring, two clutches and a differential. Body 1 and 4 are the output bodies (see Fig. 3c). As shown in Fig. 3c, bodies 1, 2 and 3 are connected with a differential mechanism. This differential causes the first body to move with the mean velocity of bodies 2 and 3. When only the top clutch is locked, body 2 connects to body 4 and the spring connects bodies 1 and 4 through body 3. When only the bottom clutch is locked, the spring connects the output bodies through body 2. This means that depending on the state of the clutches, the force on the output joints is positive or negative and therefore, energy in the spring can be released in clockwise or counterclockwise direction. Plooij et al. [39, 40] used such a CEA to reduce the energy consumption of robotic arms with pick-and-place tasks by 65 %.

D. Type 2C3C-3S

The fourth type we discuss, consists of two clutches and one spring, and has three bodies (see Fig. 3d). The purpose

of the mechanism is the same as that of type 2S-3C4C-(4)D and this type of CEA has also only been used as a passive CEA. Collins and Kuo [41] use this type of CEA in their energy recycling foot prosthesis. The lower leg connects to body 1, the heel connects to body 2 and the front of the foot connects to body 3. Here, the foot actually consists of two independently moving parts. This foot stores energy in the spring during heel strike and releases it during push-off. This led to a reduction of the metabolic energy consumption by 8 % in comparison to a conventional prosthesis. The fact that all three bodies connect to the prosthesis makes this the only CEA with three output bodies.

E. Type 4S-4C-4C

The last type of CEA is called the series parallel elastic actuator (SPEA) [42]. It consists of three main bodies (1, 2 and 3) and modules of which multiple can be connected between those bodies (see Fig. 3e). Those modules consist of a spring and two clutches. Note that for the name of this type, we only considered one module. Fig. 3e shows a system with two modules in black and one in grey. The joint is placed between bodies 1 and 3 and the motor is placed between bodies 2 and 3. By engaging and disengaging the clutches, the springs can be connected either in series (only clutch between bodies 2 and 4 is locked) or in parallel (only clutch between bodies 3 and 4 is locked) with the motor, or can be disconnected (no clutch locked). When the clutch between body 2 and 4 is unlocked, the motor can only actuate the joint through other springs that are placed in series. When in series, the elongation of the springs can be controlled; when in parallel, the torque in the springs does not pass through the motor. Preliminary results show that this concept can reduce the energy consumption of robots by tens of percents in comparison to a stiff actuator.

F. Other designs

There are four other CEA designs that are depicted in Fig. 3. The CEA type in Fig. 3f is used to reduce the energy consumption in robots, specifically robotic arms [43, 44]. The CEA type in Fig. 3g is used to mimic normal human ankle torques using only one spring [45]. The CEA type in Fig. 3h is used to obtain an actuator that mimics some aspects of biological muscles [46]. And finally, the CEA type in Fig. 3i is used to constantly input small amounts of energy into the spring that are later released to the joint [47].

G. Trends

Two trends can be observed from literature. First, the use of CEAs is increasing. More than 60 % of the papers cited above, date from 2012 or later. Before 2012, the maximum amount of papers per year that mentioned the use of a CEA was 2 (in 2010). In the first half of 2015 alone, 5 papers were found in which CEAs were used. Secondly, the complexity of CEAs is increasing. Five out of seven types of CEAs with more than one clutch were introduced in 2010 or later, while CEAs with only one clutch were used more often before 2010. It is logical that this second trend will stop at a certain point, when the added value of more clutches and more functionality is outweighed by the downsides of additional mass and lower efficiency. But we expect that this turning point has not been reached yet. And while less complex CEAs are easy to analyze by hand, the functionalities of more complex CEAs are less obvious. Therefore, there is a need for a method to analyze the functionalities of CEAs.

IV. Functionalities

Each CEA has different functionalities and properties, as shown in the previous section. This makes them suitable for different applications. In this section we define and discuss the meaning of functionality. In the next section, we will describe CEAs mathematically to analyze which CEAs incorporate which functionalities.

We define functionality as the static behavior of CEAs. This static behavior can be described in terms of the resulting generalized force Q_y on the output joint. This force depends on its turn on the position of the joint y, the resulting stiffness k_y and the equilibrium position y_0:

$$Q_y = -k_y(y - y_0) \tag{1}$$

where Q_y and y are defined in the same direction. Note that here we assume one output joint, while CEAs could also be used to transfer energy from one joint to another. The analysis would not change for such a CEA, because the output joints can be analyzed one by one. Now there are three main modes of operation that could be obtained with CEAs:

1. **Moving freely:** In this mode, the joint can move while no springs are loaded or unloaded and thus $k_y = 0$. Depending on the specific design and state of the clutches, springs that were loaded before entering this mode remain loaded or will move to their equilibrium position.
2. **Spring connected:** In this mode, there is a fixed relationship between the position of the joint and the energy in the spring(s) and thus $k_y > 0$. This relationship can be characterized by the resulting spring stiffness and the equilibrium position. In some CEAs, the stiffness and equilibrium position can be set before entering this mode of operation.
3. **Output locked:** In this mode, the joint and the springs are locked, meaning that no motion is possible. This can also be seen as an infinite stiffness.

We will now discuss those modes of operation in more detail, including how they are obtained in current CEA designs.

A. Moving freely

The moving-freely mode is available if for a certain state of the clutches, k_y is zero. This mode is available in all CEA designs in literature except the type 2CS CEA. In principle, the moving freely mode is available in the CEA in Fig. 3e. However, Mathijssen et al. [42] integrated the functionality of the two clutches into one locking mechanism: mutilated gears. Therefore, the states of the clutches in their CEA are not independent and the moving-freely mode is not available.

In principle, mode 1 can be achieved in every CEA design by the addition of one extra clutch and one extra body.

Mode 1 is used extensively in the knees of walking robots and exoskeletons [21, 22, 25–29, 35, 48]. The reason is that the torques in a human knee during the stance phase are similar to those that would have been applied by a stiff spring, but are similar to those of a weak spring during the swing phase. Therefore, during the swing phase, the (stiff) spring should be decoupled from the output joint. Of course when there is an actual physical weak spring attached, the CEA does not have a mode 1. Another application of the moving freely mode is robotic arms with pick-and-place tasks [39]. In such tasks, there is a varying distance between the pick and the place positions. Therefore, the spring characteristic should be variable. This can be done by adjusting the distance the arm travels while being in the moving-freely mode [39].

Current CEA designs show two different aspects of the moving freely mode. First, the moving freely mode implies the spring does not apply a force on the output bodies. Depending on the design, the motor can or cannot apply a force on the output bodies while being in the moving-freely mode. This depends on whether the motor is placed in parallel with the CEA [21–24, 39, 44], or in series [33, 34, 48]. The second aspect of the moving freely mode is whether the spring remains loaded or not. For instance, in a type 2C-3S CEA, the energy in the spring will be lost when the clutch is unlocked while the spring is loaded. This can reduce the energy efficiency of the CEA significantly. In order to prevent this, multiple clutches are necessary. Current CEA designs in which the spring can be locked while the output can move freely are the CEAs in Figs. 3f, h and i.

B. Spring connected

The spring-connected mode is always available, since CEAs are designed to be able to (un)load the springs. The different transfer ratios from the joint to the spring(s) determine k_y and y_0. CEAs differ in how many choices for k_y and y_0 there are and if the CEA can switch between those without entering mode 1 or 3. For instance, the CEA in Fig. 3c has two different modes 2. Whether the CEA can switch between two modes 2 without entering mode 1 or 3 depends mainly on the type of clutches that is used and the CEA design. Theoretically, all switches are possible. However, in the CEA in Fig. 3c, switching between two spring-connected modes is not possible because the clutches do not switch infinitely fast and perfectly timed. An example in which switching is possible is the CEA in Fig. 3e, because the output bodies are never locked with respect to each other since the connection between the two always passes through springs. Another issue with switching between different modes 2 is that springs that are loaded might become free to move and thus their energy is lost. This of course reduces the efficiency of the CEA and should therefore be avoided.

The trend towards CEAs with more clutches and more springs introduces the possibility of multiple modes 2. The simplest CEA designs in Fig. 3a, b and d have only one mode 2. In other CEAs, there are two different ways in which multiple modes 2 two are obtained. The CEA in Fig. 3c uses a differential to change the resulting equilibrium position y_0. This principle is used to reverse the resulting force Q_y on the output joint. This CEA was designed for robotic arms with pick-and-place tasks [39]. With this CEA, the energy in the spring can be released while accelerating in any direction that is required by the task. A similar functionality is obtained by the CEA in Fig. 3g, in which the force is reversed using a gear ratio of -1.

The CEA design in Fig. 3e has a unique functionality because it has multiple springs that can be placed in series or in parallel by the clutches. In such a CEA, the force that the springs apply on the output joint is fully controllable.

C. Output locked

The output locked mode is available if for a certain state of the clutches, the output bodies cannot move with respect to each other. This mode is available in all current CEA designs except the CEAs in Figs. 3a and e. In principle, this functionality can be added to any CEA with one additional clutch. Note that switching to mode 3 can induce shocks in the system when the system has a non-zero velocity.

There are three situations in which a locked output joint is useful. First, when the output joint has to stand still, it might be beneficial to lock the joint in order to prevent the motor from having to counteract spring forces, gravitational forces or external forces. For this reason, researchers locked the output joint in robotic arms with repetitive tasks [9, 39]. Secondly, the joint can be locked while the spring is being loaded by the motor. Cherelle et al. [36] used a 2C-3S CEA in their ankle-foot prosthesis. They connected body 1 to the lower leg and body 2 to a lever arm that connects to the foot. Then, by placing a motor between body 1 and 3, they can load the spring while not applying torque on the ankle joint. Thirdly, locking the joint can ease the timing and precision of the release of the energy in the springs. Collins and Ruina [37] used a 2CS CEA in the ankle of their 3D walking robot. In the ankle, a spring connects the calf and the back of the foot. This spring is stretched by a small motor that lifts the front of the foot. During push-off, the energy in the spring is released at once. This set-up has the advantage that at every step, the same amount of energy is released.

There are also CEAs in which only the motor is locked. Rouse et al. [35] used a 2C-3S CEA for implementation in their knee prosthesis. Body 1 connects to the upper leg and body 3 to the lower leg. The motor is then placed between bodies 1 and 2, such that the rotation of the motor can be locked. Using this CEA, the motor does not have to deliver torque when the knee torque acts like a spring, but when needed, the system acts like a regular series elastic actuator.

V. Mathematical description

For the selection of CEAs, it is important to be able to analyze the functionalities of different CEA designs. The goal of this section is to introduce a method for finding all values for k_y and y_0 in Eq. (1) that are possible within a certain CEA design. Therefore, we now introduce a method

that makes it easy to describe all possible CEAs and analyze their functionality. A CEA always consists of multiple bodies, spring(s), one or more clutches and possibly a number of constraints on the bodies. We will now discuss these components separately and give a mathematical description. Throughout the description, two examples will be explained to clarify the method: the type 2CS CEA in Fig. 3b and the type (2,3)D-3S4C-4C CEA in Fig. 3c.

A. Bodies

Bodies are movable components between which springs, clutches and differentials can be placed. Their position is denoted as x_i, where i is the number of the body. Most CEAs in literature have two external bodies and one or multiple internal bodies.

The external bodies are connected to the robot. For instance, they can be connected to the two sides of a joint, placing the CEA on that joint. An example of a bi-articular CEA can be found in [45]. CEAs with more than two external bodies are also possible and could be used to transfer energy between multiple joints [41]. The internal bodies are not directly connected to the robot. We call the vector with all body positions $\boldsymbol{x}$:

$$\boldsymbol{x}^T = \begin{bmatrix} x_1 & x_2 & \dots & x_n \end{bmatrix} \tag{2}$$

where n is the number of bodies.

1) Example 2CS: This CEA has two bodies and thus $n = 2$.

2) Example (2,3)D-3S4C-4C: This CEA has four bodies and thus $n = 4$.

B. Differentials

Gears and differentials can both be described as linear holonomic constraints between bodies. These constraints all have the form:

$$\boldsymbol{c_j}^T \boldsymbol{x} = \begin{bmatrix} c_{j,1} & c_{j,2} & \dots & c_{j,n} \end{bmatrix} \boldsymbol{x} = 0 \tag{3}$$

where the values for $c_{j,i}$ determine the constraint and j is used to enumerate the constraints. A set of m constraints can be written as:

$$\mathbf{C_D}\boldsymbol{x} = \begin{bmatrix} c_{1,1} & c_{1,2} & \dots & c_{1,n} \\ c_{2,1} & c_{2,2} & \dots & c_{2,n} \\ \vdots & \vdots & \ddots & \vdots \\ c_{m,1} & c_{m,2} & \dots & c_{m,n} \end{bmatrix} \boldsymbol{x} = \mathbf{0} \tag{4}$$

where $\mathbf{0}$ is a null vector in this case. The time derivative of this constraint also holds:

$$\mathbf{C_D}\dot{\boldsymbol{x}} = \mathbf{0} \tag{5}$$

1) Example 2CS: This CEA does not include a gearbox or a differential and thus C_D is an empty matrix.

2) Example (2,3)D-3S4C-4C: The differential in this CEA is a ideal differential as defined in [39] and thus the constraint matrix C_D is equal to

$$\mathbf{C_D} = \begin{bmatrix} 1 & -\frac{1}{2} & -\frac{1}{2} & 0 \end{bmatrix}$$

C. Springs

The potential energy in a spring is a function of the positions of its two connected bodies, say x_i and x_j. Assuming a linear spring, the potential energy E in the spring is equal to

$$E = \frac{1}{2}k(x_i - x_j - x_0)^2 \tag{6}$$

where k is the spring stiffness and x_0 is the equilibrium distance between x_i and x_j. If E is known as function of $\boldsymbol{x}$, the stiffness matrix $\mathbf{K}$ and the pretension vector $\boldsymbol{Q_0}$ can be calculated using:

$$\mathbf{K} = \frac{\partial^2 E}{\partial \boldsymbol{x}^2} \tag{7}$$

$$\boldsymbol{Q_0} = \frac{\partial E}{\partial \boldsymbol{x}} - \boldsymbol{x}^T\mathbf{K} \tag{8}$$

So the energy in the springs can be re-written as function of $\boldsymbol{x}$:

$$E = \frac{1}{2}\boldsymbol{x}^T\mathbf{K}\boldsymbol{x} + \boldsymbol{Q_0}^T\boldsymbol{x} \tag{9}$$

1) Example 2CS: The spring is placed between bodies 1 and 2. Therefore, $\mathbf{K}$ and $\boldsymbol{Q_0}$ are equal to

$$\mathbf{K} = \begin{bmatrix} k & -k \\ -k & k \end{bmatrix}$$

$$\boldsymbol{Q_0} = \begin{bmatrix} -kx_0 & kx_0 \end{bmatrix}$$

2) Example (2,3)D-3S4C-4C: The spring is placed between bodies 2 and 3. Therefore, $\mathbf{K}$ and $\boldsymbol{Q_0}$ are equal to

$$\mathbf{K} = \begin{bmatrix} 0 & 0 & 0 & 0 \\ 0 & k & -k & 0 \\ 0 & -k & k & 0 \\ 0 & 0 & 0 & 0 \end{bmatrix}$$

$$\boldsymbol{Q_0} = \begin{bmatrix} 0 & -kx_0 & kx_0 & 0 \end{bmatrix}$$

D. Clutches

A clutch switches between allowing and preventing relative motion between two bodies. We define the state of the i-th clutch as l_i, which has a value of 1 when the clutch prevents relative motion and a value of 0 otherwise. The number of clutches in the mechanism is p. Now define the matrix $\mathbf{L}$ as the diagonal matrix of $[l_1, l_2 \dots l_p]$ and $\mathbf{L_I}$ as a $p \times n$ oriented incidence matrix. Then the constraint imposed on the system by the clutches is

$$\mathbf{L}\mathbf{L_I}\dot{\boldsymbol{x}} = \mathbf{C_L}\dot{\boldsymbol{x}} = 0 \tag{10}$$

Note that this is a constraint on the velocities and not on the positions, because the relative positions are set at the moment a clutch is locked. Therefore, we could also write this as a constraint on the positions with an offset. As an alternative, this offset can also be set in the pretension vector of the springs $\boldsymbol{Q_0}$. Since all options lead to the same answers, we will consider the constraint on the positions and assume that $\boldsymbol{Q_0}$ depends on the clutching positions.

1) Example 2CS: For this CEA, $n = 2$ and $p = 1$. The clutch is placed between bodies 1 and 2, meaning that $\mathbf{L_I}$ and $\mathbf{L}$ are equal to

$$\mathbf{L_I} = \begin{bmatrix} 1 & -1 \end{bmatrix} \qquad \mathbf{L} = \begin{bmatrix} l_1 \end{bmatrix}$$

where l_1 is equal to 0 or 1, depending on the state of the clutch.

2) Example (2,3)D-3S4C-4C: In the example in Fig. 3c, $n = 4$ and $p = 2$. The clutches are placed between bodies 2 and 4 and between bodies 3 and 4. This means that the matrices $\mathbf{L_I}$ and $\mathbf{L}$ are equal to

$$\mathbf{L_I} = \begin{bmatrix} 0 & 1 & 0 & -1 \\ 0 & 0 & 1 & -1 \end{bmatrix} \qquad \mathbf{L} = \begin{bmatrix} l_1 & 0 \\ 0 & l_2 \end{bmatrix}$$

E. Determining the motion space

Based on Eqs. (5) and (10), we can find a basis $\mathbf{B}$ for the motion space of the mechanism:

$$\mathbf{Z}\boldsymbol{x} = \begin{bmatrix} \mathbf{C_D} \\ \mathbf{C_L} \end{bmatrix} \boldsymbol{x} = \mathbf{0} \tag{11}$$

$$\mathbf{B} = \text{null}\,(\mathbf{Z}) \tag{12}$$

where the null operator returns a matrix with vectors that form a basis for the null space of a matrix. Since $\mathbf{B}$ is a basis for all possible motions of $\boldsymbol{x}$, it can be used to define a minimal set of generalized coordinates $\boldsymbol{q}$ for these motions. From this vector, the positions of the individual bodies can be calculated:

$$\boldsymbol{x} = \mathbf{B}\boldsymbol{q} \tag{13}$$

1) Example 2CS: The clutch in the CEA in Fig. 3b has two states. When the clutch is locked, the mechanism can only move as a whole, meaning that $\boldsymbol{q}$ is a scalar. When the clutch is not locked, $\boldsymbol{q}$ is a vector of length two. The matices $\mathbf{B_{l_1}}$ are equal to:

$$\mathbf{B_1} = \begin{bmatrix} 1 \\ 1 \end{bmatrix} \qquad \mathbf{B_0} = \begin{bmatrix} 1 & 0 \\ 0 & 1 \end{bmatrix}$$

Here, the two bodies can move independently and $\boldsymbol{x}$ is equal to $\boldsymbol{q}$. Note that the number of columns of $\mathbf{B}$ is equal to the number of degrees of freedom of the mechanism plus one, because even when the mechanism is locked, the mechanism can still move as a whole. The rows of $\mathbf{B}$ give information on the possible motion of the bodies. If row i contains only zeros, then the i-th body is locked.

2) Example (2,3)D-3S4C-4C: For the possible states of the clutches in this CEA, the matrices $\mathbf{B}_{l_1,l_2}$, containing vectors that form a basis for the null space, now become

$$\mathbf{B}_{1,1} = \begin{bmatrix} 1 \\ 1 \\ 1 \\ 1 \end{bmatrix} \qquad \mathbf{B}_{1,0} = \begin{bmatrix} 1 & 0 \\ 0 & 1 \\ 2 & -1 \\ 0 & 1 \end{bmatrix}$$

$$\mathbf{B}_{0,1} = \begin{bmatrix} 1 & 0 \\ 0 & 1 \\ 2 & -1 \\ 2 & -1 \end{bmatrix} \qquad \mathbf{B}_{0,0} = \begin{bmatrix} 1 & 0 & 0 \\ 0 & 1 & 0 \\ 2 & -1 & 0 \\ 0 & 0 & 1 \end{bmatrix}$$

Those four $\mathbf{B}$-matrices show the motion space for the four different states of the clutches. When all clutches are locked, the only motion that is allowed is when all bodies rotate in the same direction with the same velocity. When only one clutch is locked, the motions of bodies 2 and 3 are a function of the motions of bodies 1 and 4. And when none of the clutches are locked, the mechanism can move freely.

F. Determining the k_y and y_0

Now, we are interested in the force-displacement relationship between two of the bodies. Typically, we are interested in the bodies that are connected to the two sides of a joint or in the bodies between which the motor acts. This way we can analyze what the joint and the motor 'feel'. We call the bodies we are interested in the i-th and the j-th bodies. Then the output displacement y is the difference between the two bodies:

$$y = x_i - x_j = \boldsymbol{d}^T\boldsymbol{x} \tag{14}$$

where $\boldsymbol{d}$ is a vector containing two unity entries, of which one is negative. In order to determine the relationship in Eq. (1), we have to find $\boldsymbol{x}$ as a function of y. Unfortunately, Eq. (14) cannot be solved for $\boldsymbol{x}$, because $\boldsymbol{d}$ is not invertible. Simplifying the problem to a static analysis, we can find the motion of the whole mechanism by minimizing the energy in the springs, while still satisfying the constraints in Eqs. (5) and (10). This can be solved using Lagrange multipliers, leading to the minimization problem:

$$\min_{\boldsymbol{x},\boldsymbol{\lambda_1},\boldsymbol{\lambda_2}} \quad \mathcal{L}(\boldsymbol{x}, \boldsymbol{\lambda_1}, \lambda_2) \tag{15}$$

where $\boldsymbol{\lambda_1}$ and λ_2 are Lagrange multipliers and the Lagrangian $\mathcal{L}$ is equal to

$$\mathcal{L} = \frac{1}{2}\boldsymbol{x}^T\mathbf{K}\boldsymbol{x} + \boldsymbol{Q_0}^T\boldsymbol{x} + \boldsymbol{\lambda_1}^T\mathbf{Z}\boldsymbol{x} + \lambda_2(\boldsymbol{d}^T\boldsymbol{x} - y) \tag{16}$$

This can be solved by setting the partial derivatives of $\mathcal{L}$ to $\boldsymbol{x}$, $\boldsymbol{\lambda_1}$ and λ_2 to zero. Reordering and using matrix notation to isolate the unknowns this becomes

$$\begin{bmatrix} \mathbf{K} & \mathbf{Z}^T & \boldsymbol{d} \\ \mathbf{Z} & \mathbf{0} & \mathbf{0} \\ \boldsymbol{d}^T & \mathbf{0} & 0 \end{bmatrix} \begin{bmatrix} \boldsymbol{x} \\ \boldsymbol{\lambda_1} \\ \lambda_2 \end{bmatrix} = \begin{bmatrix} -\boldsymbol{Q_0} \\ \mathbf{0} \\ y \end{bmatrix} \tag{17}$$

Here λ_2 is equal to Q_y since it is the force that ensures that Eq. (14) holds. Now, often the matrix in Eq. (17) is singular, because there are multiple solutions for $\boldsymbol{x}$ that satisfy the constraints and for which the energy in the springs is minimal. An example is a mechanism that can rotate as a whole in absolute sense, while the relative motion is constrained. This singularity means that the matrix in Eq. (17) is not invertible and that the solution is the sum of the pseudo inverse times a vector plus any vector that is in the null-space of the matrix. In general, the null-space of the matrix in Eq. (17) contains all motions that do not influence the length of any spring. Therefore, this space is not interesting for the calculation of k_y and y_0 and we can take the pseudo

inverse:

$$\begin{bmatrix} \boldsymbol{x} \\ \boldsymbol{\lambda_1} \\ Q_y \end{bmatrix} = \begin{bmatrix} \mathbf{K} & \mathbf{Z}^T & \boldsymbol{d} \\ \mathbf{Z} & \mathbf{0} & \mathbf{0} \\ \boldsymbol{d}^T & \mathbf{0} & 0 \end{bmatrix}^{\dagger} \begin{bmatrix} -\boldsymbol{Q_0} \\ \mathbf{0} \\ y \end{bmatrix} \tag{18}$$

$$= \begin{bmatrix} \mathbf{A}_{11} & \mathbf{A}_{12} & \boldsymbol{A}_{13} \\ \mathbf{A}_{21} & \mathbf{A}_{22} & \boldsymbol{A}_{23} \\ \boldsymbol{A}_{31} & \boldsymbol{A}_{32} & A_{33} \end{bmatrix} \begin{bmatrix} -\boldsymbol{Q_0} \\ \mathbf{0} \\ y \end{bmatrix} \tag{19}$$

From this equation, it follows that the parameters in Eq. (1) are equal to

$$k_y = -A_{33} \tag{20}$$

$$y_0 = \frac{\boldsymbol{A}_{31}\boldsymbol{Q_0}}{A_{33}} \tag{21}$$

Note that the pseudo inverse also exists when the i-th and j-th bodies are locked with respect to each other. Therefore, it should be checked if Eq. (17) holds for the found $\boldsymbol{x}$, $\boldsymbol{\lambda_1}$ and λ_2. If it does not hold, then the bodies are locked.

1) Example 2CS: The output bodies of this CEA are bodies 1 and 2, meaning that $\boldsymbol{d}$ is equal to

$$\boldsymbol{d}^T = \begin{bmatrix} 1 & -1 \end{bmatrix}$$

For the two possible states of the clutches, this gives the following outcomes:

- $\begin{bmatrix} l_1 \end{bmatrix} = [0]$: the spring is (un)loaded when moving the joint, meaning that this is a mode 2. $k_y = k$, $y_0 = Q_0 k^{-1}$.
- $\begin{bmatrix} l_1 \end{bmatrix} = [1]$: all bodies are locked, meaning that it is a mode 3.

2) Example (2,3)D-3S4C-4C: The output bodies of this CEA are bodies 1 and 4, meaning that $\boldsymbol{d}$ is equal to

$$\boldsymbol{d}^T = \begin{bmatrix} 1 & 0 & 0 & -1 \end{bmatrix}$$

For the four possible states of the clutches, this gives the following outcomes:

- $\begin{bmatrix} l_1 & l_2 \end{bmatrix} = \begin{bmatrix} 0 & 0 \end{bmatrix}$: the output can move freely, meaning that this is a mode 1. $k_y = 0$, $y_0 = 0$.
- $\begin{bmatrix} l_1 & l_2 \end{bmatrix} = \begin{bmatrix} 1 & 0 \end{bmatrix}$: the spring is (un)loaded when moving the joint, meaning that this is a mode 2. $k_y = 4k$, $y_0 = -2Q_0 k^{-1}$.
- $\begin{bmatrix} l_1 & l_2 \end{bmatrix} = \begin{bmatrix} 0 & 1 \end{bmatrix}$: the spring is (un)loaded when moving the joint, meaning that this is a mode 2. $k_y = 4k$, $y_0 = 2Q_0 k^{-1}$.
- $\begin{bmatrix} l_1 & l_2 \end{bmatrix} = \begin{bmatrix} 1 & 1 \end{bmatrix}$: all bodies are locked, meaning that it is a mode 3.

Note that when one of the clutches is engaged, the stiffness is always equal to $4k$. On the other hand, the force between bodies 1 and 4 can differ depending on the clutch that is locked, because the equilibrium position y_0 is different for the two modes 2.

G. Switching between modes

As mentioned in section IV-B, switching between modes can lead to energy loss, because a loaded spring might become disconnected from the output bodies without being locked by clutches. This energy loss is typically undesirable because it decreases the energy efficiency of the CEA. Therefore, before performing a switch, the energy in the springs before and after the switch can be calculated. Using Eq. (18), the position vector $\boldsymbol{x}$ can be calculated before and after the switch. Then, Eq. (9) can be used to calculate the energy in the springs to check if energy is lost by performing a certain switch.

VI. The future of CEA design

We envision future CEAs consisting of multiple springs and multiple clutches. Section III showed that there already is a trend towards such CEAs and Section V provided a method that eases the analysis of current and future CEA designs. This section focuses on the design of future CEAs. First, we discuss the synthesis of new CEAs. Secondly, we discuss the use of CEAs for stiffness control and force control. Thirdly, we propose a new CEA design in which the number of reachable combinations of k_y and y_0 grows exponentially with the number of clutches and springs.

A. Choosing a suitable CEA

The question now is how to select a suitable CEA for a certain application. We suggest three approaches that span the space of possible approaches from manual to automated design: optimization, heuristics and using building blocks.

In an optimization approach, the configuration of the clutches, springs and differentials are included in an optimization algorithm. This algorithm can either have the goal to approach a certain functionality or can be part of a co-optimization that optimizes both design and control. It should be noted that the amount of possible mechanisms grows fast with the amount of used components. Therefore, the search space might have to be limited or an optimization algorithm should be used that can handle large and odd-shaped spaces. In such an optimization, the method in Section V will be very useful. In a heuristic approach, the designer determines the functionality that he or she thinks is desired and tries to find a CEA that matches that functionality. The limitations of this approach are the skills, the knowledge and the time of the designer. There is a third approach that helps the designer to find a suitable CEA: using building blocks. Here we mention four building blocks that are particularly interesting. First, a type 2C-3CS CEA is a building block that can be placed between two bodies and can be used to arbitrarily connect those bodies, decouple them, or place a stiffness between the two. Secondly, a type (2,3)D-3S4C-4C CEA is a building block that can be used to reverse the torque between two joints. Thirdly, multiple type 2CS CEAs in series are a building block that can switch between being disconnected, being locked or having multiple different stiffnesses. And finally, a module of a type 4S-4C-4C CEA is a building block to switch a spring between being in series or in parallel with the motor.

B. Force control and stiffness control

The two main reasons for using CEAs is to control the force and to control the stiffness. These two reasons lead to

different CEA designs. For controlling the force Q_y, there are two techniques that can be used. First, when considering only one spring, the force on the output joint changes when changing the resulting transfer ratio between the spring and the output joint by switching the clutches. This influences both k_y and y_0. This technique is exploited in two existing CEA designs: the ones in Figs. 3c and 3g. Secondly, when using multiple springs, the springs can be placed in parallel, such that they connect and disconnect from the joint. An example would be to place multiple type 2C-3CS CEAs in parallel. Another example of such a CEA is the type 4S-4C-4C CEA in Fig. 3e. In such a CEA, the force is even fully controllable, because the motor can change the equilibrium positions of the springs.

For controlling the stiffness, the same techniques can be used as for controlling the force, since those techniques also change k_y. However, there is a third technique to change the stiffness that does not involve changing the force: placing multiple type 2CS CEAs in series (see Fig. 4a). The challenge in such a design is to keep the energy efficiency high, as discussed in section V-G. The general rule for keeping the efficiency high is to only unlock springs in which the force is similar to the force in the springs that are already unlocked. A new CEA design based on this principle is introduced in the next section.

C. A newly proposed CEA design

Based on the building block method, we propose a new CEA design in two steps. First, we repeat the 2CS building block to obtain the CEA in Fig. 4a. We used a for-loop in MATLAB to determine the combinations of k_y and y_0 for all combinations of states of the clutches as described in section V. This analysis showed that the number of resulting stiffnesses is equal to $2^p - 1$, where p is the number of clutches and that this CEA also has a locked mode. However, it has no moving-freely mode and the Q_y cannot be reversed arbitrarily.

To increase the functionality of the CEA in Fig. 4a further, we propose to use this CEA as a building block again and combine it with the type (2,3)D-3S4C-4C CEA in Fig. 3c. This results in the CEA in Fig. 4b, where bodies 1, 2 and 3 connect through a differential. Again we used the analysis from section V in MATLAB to obtain the modes and the number of possible combinations of k_y and y_0. This led to the conclusion that this CEA includes a moving-freely mode and a locked mode. Furthermore, given the states of the clutches $3 \ldots p$, Q_y can be positive or negative depending on the states of clutches 1 and 2. The number of resulting stiffnesses is $2^{p-2} - 1$. Since y_0 can be set by changing the states of clutches 1 and 2, the number of possible combinations of k_y and y_0 is $2^{p-1} - 1$. Note that in order to reach this exponential growth in resulting stiffnesses, the stiffnesses of the individual springs should all be different.

VII. Discussion

In this paper we analyzed the class of mechanisms called clutched elastic actuators (CEAs). Although CEAs have existed for decades, most studies that use CEAs date from after

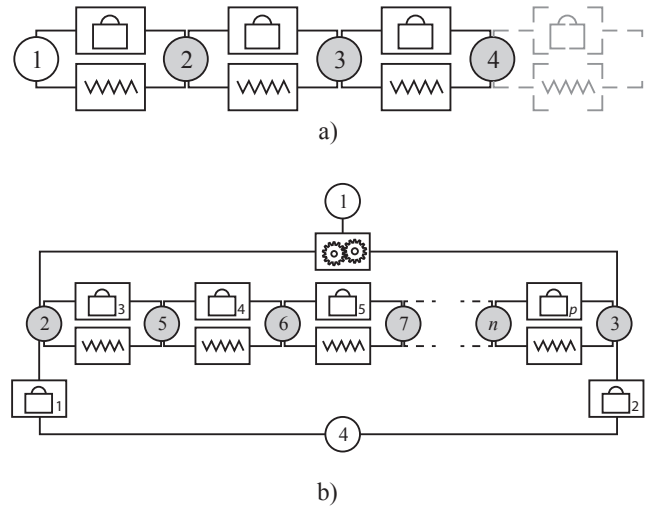

Figure 4. A visualization of two CEAs consisting of building blocks. a) A CEA where a type 2CS CEA is placed in series multiple times. b) A CEA in which the CEA of visualized in a. is placed inside a differential mechanism, allowing the force to be reversed.

2010. We provided a unified mathematical description that can be used to easily analyze the functionality of different CEAs. In this section, we discuss the current use of CEAs, series and parallel elasticity, the components that are used and the use and limitations of the introduced taxonomy.

A. Use and limitations of CEAs

The nine types of existing CEAs show that very different CEA designs have been implemented in robots. However, their functionalities are still limited. This follows from the fact that only one type of CEA has more than one spring and only a few have four or more clutches. As the reason for using multiple springs and many clutches, Mathijssen et al. mention that they 'believe that the way transmissions and springs are used, needs drastic innovation' [42]. In this paper we showed that with more complex CEAs, the possible combinations of k_y and y_0 can grow exponentially with the number of springs and clutches, meaning that the energy inflow and outflow of the springs can be controlled better.

Most CEAs are implemented to reduce the energy consumption, peak torque or peak power of robots and humans. Since CEAs are used for a wide range of applications and goals, it is hard to compare the quantitative results from the papers cited in this study. However, the underlying principle in all applications is the same. For instance, for reducing the energy consumption, springs are more efficient at storing and releasing energy than motors. By recapturing negative energy and releasing it at a later instance in time, the motor consumes less energy. Typically, reductions in the energy consumption of robots between 20 % and 80 % are reported. Since the energy efficiency of springs themselves is typically 90 %-95 %, we expect that reported reductions in the energy consumption will be even higher in the future. With the same line of reasoning, it can be shown that CEAs lead to a reduced peak torque and peak power. The improved energy consumption, peak torque and peak power comes at

the cost of partially losing control authority over the torques. Therefore, the challenge will be to use CEAs while keeping the versatility of the robot at an acceptable level.

Next to functionality, there are three main aspects of CEA designs that will determine their impact on robots. The first two aspects are mass and size. In many robots in which energy consumption, peak power and peak torque are important, size and mass have a large impact on the performance. In general, a higher number of clutches and springs leads to a higher mass and size of the CEA. Therefore, designers should always weigh the advantages of a complex CEA design agains the downside of an increased mass and size. The third important aspect of CEA designs is their energy efficiency. This efficiency is mainly determined by the energy consumption of the clutches and the friction of the CEA, while both the energy consumption and the friction might increase with the number of clutches. This means that there is also a design trade-off between functionality and efficiency.

B. Series elastic and parallel elastic

The taxonomy of CEAs includes both clutched parallel elastic actuators and clutched series elastic actuators. In some designs, the spring(s) can even be switched between a series and a parallel configuration. However, in most CEAs, the springs are placed in parallel to a motor. This matches with the main reasons for designers to use CEAs: energy efficiency, peak torque and peak power. The peak torque is not reduced by SEAs, because the torque on the joint also passes through the motor. For the same reason, the reduction in energy consumption is limited using SEAs, because the copper losses scale quadratically with the torque. The peak power can be reduced in some applications using SEAs, because the spring can be used as an energy buffer, separating high torques and high velocities in time. Therefore, we expect the best results from CEAs that are in parallel with the motor when energy efficiency, peak torque and peak power are important. CEAs that are in series with the motor can be used to increase robustness and shock resilience, similar to the use of elasticity in SEAs.

C. Components

The components of CEAs we considered in this study are springs, clutches and differentials. Springs are well studied, commercially available components with high energy efficiencies. They might still be improved by the use of materials that can store much energy per volume or per mass. The extent to which differentials are studied varies per amount of bodies that are involved. A two-body differential is the same as a gear, which is a well known component. Three-body differentials are also studied widely, since they are used in cars and planetary gearboxes. However, when they are to be widely applied in robots, they will need more development, especially in terms of compactness. Furthermore, four-and-more-body differentials are hardly studied at all. Clutches are still subject to many recent studies. The main challenge is to make clutches with a high torque density and low energy consumption and can lock at every position. Recent clutch designs include piezoelectric clutches [49], statically balanced brakes [50] and electro static clutches [32].

Two components that are related to CEAs but have not yet been applied in CEAs are continuously variable transmissions (CVTs) and dampers. A CVT could be interesting in combination with clutches and springs because it would allow for a more continuous variation of the stiffness instead of a discrete variation. A similar idea was proposed by Wang and Zhu [51]. Current limitations to CVTs include their compactness, efficiency and reliability. Dampers were omitted from this study because they are dissipative elements that are not ideal from an energy perspective. However, they might be useful to improve the control bandwidth of robots [52, 53]. Therefore, they might be implemented in CEAs in the future, changing their name to clutched impedance actuators (CIA).

D. Use and limitations of the introduced taxonomy

The taxonomy and mathematical description that were introduced in this paper can be used to analyze the different values for k_y and y_0 that can be reached given a certain morphology. In section VI-C, we used this method to derive the properties of two CEAs. In these symmetric and structured CEAs, this analysis could have been performed by hand. The full capacity of the mathematical description becomes clear when considering less structured, complex CEA designs, for instance in an optimization as described in section VI-A.

In the taxonomy, we used ideal clutches to categorize different CEAs. In practice, the choice for a certain type of clutch has an impact on the working of the CEA. Section IV-B discussed that with clutches that do not switch infinitely fast and perfectly timed, the functionality decreases.

In general, switches between modes can only be performed when it only requires one clutch to be switched. However, this general rule might not hold when passive clutches are used. An example of a passive clutch is a one way clutch that locks the motion in one direction and allows motion in the other direction. Such clutches react on a load and therefore react on the state of the other clutches. Therefore, future work should address the question how the choice for a certain type of clutch influences the functionality.

One final topic that should be addressed in future work is the use of motors. Many CEAs will have the function of supporting a motor, thereby the energy efficiency of the complete actuator. The performance of such motorized CEAs depends highly on the details regarding the motor. These details include both the type of motor that is used and the way it is controlled.

VIII. Conclusion

This paper presented an overview of current CEA designs and provided a taxonomy for analyzing functionalities of current and future CEAs. We conclude that functionality can be analyzed using a constraint matrix, a stiffness matrix and multiplication of a clutch dependent diagonal matrix with an oriented incidence matrix. With these matrices, it is possible to calculate the resulting stiffnesses and equilibrium positions and thus the resulting force on selected bodies.

Current CEA designs are split into nine types, based on the placement of the spring(s), clutch(es) and differential(s). In general, CEA designs are becoming more complex and their full potential will only be reached with multiple clutches, springs and differentials. Based on the introduced taxonomy, we proposed a new CEA design, showing that in CEAs, the number of resulting stiffnesses and equilibrium positions can grow exponentially with the number of clutches and springs.

Acknowledgement

This work is part of the research programme STW, which is (partly) financed by the Netherlands Organisation for Scientific Research (NWO). The authors thank Steve Collins, Heike Vallery and Bram Vanderborght for their useful comments on the manuscript of this paper.

References

[1] S. Collins *et al.*, "Efficient bipedal robots based on passive-dynamic walkers," *Science*, vol. 307, no. 5712, pp. 1082–1085, 2005.

[2] Y. Mei *et al.*, "Energy-efficient motion planning for mobile robots," in *Robot Autom, Proc. IEEE Int. Conf. on*, vol. 5, 2004, pp. 4344–4349 Vol.5.

[3] S. Au and H. Herr, "Powered ankle-foot prosthesis," *IEEE Robot. Autom. Mag.*, vol. 15, no. 3, pp. 52–59, 2008.

[4] F. Sup *et al.*, "Design and control of a powered transfemoral prosthesis," *Int J Robot Res*, vol. 27, no. 2, pp. 263–273, 2008.

[5] J. E. Pratt *et al.*, "The roboknee: an exoskeleton for enhancing strength and endurance during walking," in *Robot Autom, Proc. IEEE Int Conf on*, vol. 3. IEEE, 2004, pp. 2430–2435.

[6] A. M. Dollar and H. Herr, "Lower extremity exoskeletons and active orthoses: challenges and state-of-the-art," *IEEE Trans. Robot.*, vol. 24, no. 1, pp. 144–158, 2008.

[7] G. Pratt and M. Williamson, "Series elastic actuators," in *Intelligent Robots and Systems, Proc. IEEE/RSJ Int. Conf. on*, vol. 1, Aug 1995, pp. 399–406 vol.1.

[8] J. Herder, "Energy-free systems: Theory, conception and design of statically balanced spring mechanisms," 2001.

[9] V. I. Babitsky and A. Shipilov, *Resonant robotic systems*. Springer, 2003.

[10] S. Shirata, A. Konno, and M. Uchiyama, "Design and evaluation of a gravity compensation mechanism for a humanoid robot," in *Intelligent Robots and Systems, IEEE/RSJ Int. Conf. on*, Oct 2007, pp. 3635–3640.

[11] D. P. Ferris *et al.*, "Running in the real world: adjusting leg stiffness for different surfaces," *Proc. of the Royal Society of London. Series B: Biological Sciences*, vol. 265, no. 1400, pp. 989–994, 1998.

[12] K. Endo *et al.*, "A quasi-passive model of human leg function in level-ground walking," in *Intelligent Robots and Systems, IEEE/RSJ Int. Conf. on*, Oct 2006, pp. 4935–4939.

[13] K. Endo and H. Herr, "A model of muscle-tendon function in human walking," in *Robot Autom, IEEE Int. Conf. on*. IEEE, 2009, pp. 1909–1915.

[14] T. G. Sugar *et al.*, "Walking with springs," pp. 797 602–797 602–15, 2011.

[15] U. Mettin *et al.*, "Parallel elastic actuators as control tool for preplanned trajectories of underactuated mechanical systems," *Int J of Robot Res*, 2009.

[16] R. Ham *et al.*, "Compliant actuator designs," *IEEE Robot. Autom. Mag.*, vol. 16, no. 3, pp. 81–94, September 2009.

[17] B. Vanderborght *et al.*, "Variable impedance actuators: A review," *Robot Auton Syst*, vol. 61, no. 12, pp. 1601 – 1614, 2013.

[18] S. Stramigioli *et al.*, "A concept for a new energy efficient actuator," in *Advanced Intelligent Mechatronics, IEEE/ASME Int. Conf. on*, July 2008, pp. 671–675.

[19] M. Plooij *et al.*, "Lock your robot: A review of locking devices in robotics," *IEEE Robot. Autom. Mag.*, vol. 22, no. 1, pp. 106–117, March 2015.

[20] J. T. Finer *et al.*, "Single myosin molecule mechanics: piconewton forces and nanometre steps," *Nature*, vol. 368, no. 6467, pp. 113–119, 1994.

[21] D. F. B. Haeufle *et al.*, "A clutched parallel elastic actuator concept: Towards energy efficient powered legs in prosthetics and robotics," in *Biomedical Robotics and Biomechatronics, IEEE RAS EMBS Int. Conf. on*, June 2012, pp. 1614–1619.

[22] J. Karssen and M. Wisse, "Running robot phides," in *Dynamic Walking Conference*, 2012.

[23] S. Au *et al.*, "Powered ankle-foot prosthesis for the improvement of amputee ambulation," in *Engineering in Medicine and Biology Society, Int. Conf. on*, Aug 2007, pp. 3020–3026.

[24] M. Eslamy *et al.*, "Effects of unidirectional parallel springs on required peak power and energy in powered prosthetic ankles: Comparison between different active actuation concepts," in *Robotics and Biomimetics, IEEE Int. Conf. on*, Dec 2012, pp. 2406–2412.

[25] M. S. Cherry *et al.*, "An elastic exoskeleton for assisting human running," in *ASME Int. Design Engineering Technical Conferences and Computers and Information in Engineering Conference*, 2009, pp. 727–738.

[26] G. Elliott *et al.*, "The biomechanics and energetics of human running using an elastic knee exoskeleton," in *Rehabilitation Robotics, IEEE Int. Conf. on*, June 2013, pp. 1–6.

[27] G. Elliott *et al.*, "Design of a clutch-spring knee exoskeleton for running," *J Med Device*, vol. 8, no. 3, p. 031002, 2014.

[28] L. Flynn *et al.*, "Ankle–knee prosthesis with active ankle and energy transfer: Development of the cyberlegs alpha-prosthesis," *Robot Auton Syst*, 2014.

[29] K. Shamaei *et al.*, "Biomechanical effects of stiffness in parallel with the knee joint during walking," *IEEE Trans. Biomed. Eng.*, vol. PP, no. 99, pp. 1–1, 2015.

[30] M. Wiggin *et al.*, "An exoskeleton using controlled

energy storage and release to aid ankle propulsion," in *Rehabilitation Robotics, IEEE Int. Conf. on*, June 2011, pp. 1–5.

[31] S. H. Collins *et al.*, "Reducing the energy cost of human walking using an unpowered exoskeleton," *Nature*, 2015.

[32] S. Diller *et al.*, "A lightweight, low-power electroadhesive clutch and spring for exoskeleton actuation," in *Robot Autom, IEEE Int. Conf. on*, May 2016.

[33] E. C. Martinez-Villalpando and H. Herr, "Agonist-antagonist active knee prosthesis: A preliminary study in level-ground walking," *J. Rehabil. Res. Dev*, vol. 46, no. 3, pp. 361–374, 2009.

[34] N. Tsagarakis *et al.*, "An asymmetric compliant antagonistic joint design for high performance mobility," in *Intelligent Robots and Systems, IEEE/RSJ Int. Conf. on*, Nov 2013, pp. 5512–5517.

[35] E. Rouse *et al.*, "Clutchable series-elastic actuator: Design of a robotic knee prosthesis for minimum energy consumption," in *Rehabilitation Robotics, IEEE Int. Conf. on*, June 2013, pp. 1–6.

[36] P. Cherelle *et al.*, "The amp-foot 2.1: actuator design, control and experiments with an amputee," *Robotica*, vol. 32, no. 08, pp. 1347–1361, 2014.

[37] S. Collins and A. Ruina, "A bipedal walking robot with efficient and human-like gait," in *Robot Autom, Proc. of the IEEE Int. Conf. on*, April 2005, pp. 1983–1988.

[38] L. C. Rome *et al.*, "Biomechanics: Rubber bands reduce the cost of carrying loads," *Nature*, vol. 444, no. 7122, pp. 1023–1024, 2006.

[39] M. Plooij *et al.*, "Design and evaluation of the bi-directional clutched parallel elastic actuator (bic-pea)," in *Robot Autom, IEEE Int. Conf. on*, May 2015, pp. 1002–1009.

[40] M. Plooij *et al.*, "Reducing the energy consumption of robots using the bidirectional clutched parallel elastic actuator," *IEEE Transactions on Robotics*, vol. PP, no. 99, pp. 1–12, 2016.

[41] S. H. Collins and A. D. Kuo, "Recycling energy to restore impaired ankle function during human walking," *PLoS one*, vol. 5, no. 2, p. e9307, 2010.

[42] G. Mathijssen *et al.*, "Variable recruitment of parallel elastic elements: Series–parallel elastic actuators (spea) with dephased mutilated gears," *IEEE/ASME Trans. Mechatronics*, vol. 20, no. 2, pp. 594–602, 2015.

[43] M. Cortez and A. Forner-Cordero, "On the study of a clutch device for exoskeletons and robot joints: Energetic efficiency study and mechanism concept."

[44] M. Plooij and M. Wisse, "A novel spring mechanism to reduce energy consumption of robotic arms," in *Intelligent Robots and Systems, IEEE/RSJ Int. Conf. on*, Oct 2012, pp. 2901–2908.

[45] R. Unal *et al.*, "Prototype design and realization of an innovative energy efficient transfemoral prosthesis," in *Biomedical Robotics and Biomechatronics, IEEE RAS and EMBS Int. Conf. on*, Sept 2010, pp. 191–196.

[46] D. Leach *et al.*, "Linear multimodal actuation through discrete coupling," *IEEE/ASME Trans. Mechatronics*, vol. 19, no. 3, pp. 827–839, June 2014.

[47] J. Gilbert and A. Abu Hassan, "Design and control of a multi-mode drive system," in *Advanced Motion Control, 5th Int. Workshop on*, Jun 1998, pp. 611–616.

[48] N. Tsagarakis *et al.*, "Compliant antagonistic joint tuning for gravitational load cancellation and improved efficient mobility," in *Humanoid Robots, IEEE-RAS Int. Conf. on*, Nov 2014, pp. 924–929.

[49] M. Laffranchi *et al.*, "A variable physical damping actuator (vpda) for compliant robotic joints," in *IEEE Int. Conf. on Robot Autom*, 2010, pp. 1668–1674.

[50] M. Plooij *et al.*, "Statically balanced brakes," *Precision Engineering*, vol. 43, pp. 468 – 478, 2016.

[51] X. Wang and W. Zhu, "Design, modeling, and simulation of a geared infinitely variable transmission," *J Mech Design*, vol. 136, no. 7, p. 071011, 2014.

[52] A. Gosline and V. Hayward, "Eddy Current Brakes for Haptic Interfaces: Design, Identification, and Control," *IEEE/ASME Trans. Mechatronics*, vol. 13, no. 6, pp. 669 –677, 2008.

[53] F. Parietti *et al.*, "Series Viscoelastic Actuators Can Match Human Force Perception," *IEEE/ASME Trans. Mechatronics*, vol. 16, no. 5, pp. 853–860, 2011.

Michiel Plooij received both his MSc and PhD in Mechanical Engineering from the Delft University of Technology, The Netherlands and is currently working at Motekforce Link and as a Post-Doc at the Delft University of Technology. In the past has worked on medical devices (such as prostheses) and energy efficient robotic arms. His current research interests are rehabilitation robots, locking mechanisms, open loop control and spring mechanisms.

Wouter Wolfslag is currently a Ph.D. student at the Delft University of Technology, after receiving both his B.Sc. and M.Sc. in Mechanical Engineering from the Delft University of Technology, The Netherlands. In the past he worked on bi-pedal robots and efficient robotic arms. His current research interests are energy efficient robots, robotic manipulation, natural dynamics based control and feedforward control.

Martijn Wisse Martijn Wisse received both his MSc and PhD in Mechanical Engineering from the Delft University of Technology, The Netherlands, where he is currently appointed as a Professor. His previous research focused on passive dynamic walking robots, and now he is using concepts from that research (such as passive stability) for the field of robot manipulators for agile manufacturing. His current interests include underactuated grasping, open-loop stable manipulator control, design of robot arms and robot systems, agile manufacturing and the creation of startup companies in the same field.