Published in final edited form as:
Nat Photonics. 2014 May 1; 8(5): 375–380. doi:10.1038/nphoton.2014.57.

Coherent terabit communications with microresonator Kerr frequency combs

Joerg Pfeifle[1], **Victor Brasch**[2], **Matthias Lauermann**[1], **Yimin Yu**[1], **Daniel Wegner**[1], **Tobias Herr**[2], **Klaus Hartinger**[3], **Philipp Schindler**[1], **Jingshi Li**[1], **David Hillerkuss**[1,†], **Rene Schmogrow**[1], **Claudius Weimann**[1], **Ronald Holzwarth**[3], **Wolfgang Freude**[1], **Juerg Leuthold**[1,†], **Tobias J. Kippenberg**[2,#], and **Christian Koos**[1,*]

[1]Institute of Photonics and Quantum Electronics (IPQ) and Institute of Microstructure Technology (IMT), Karlsruhe Institute of Technology (KIT), 76131 Karlsruhe, Germany [2]Ecole Polytechnique Federale de Lausanne (EPFL), 1015 Lausanne, Switzerland [3]Menlo Systems GmbH, 82152 Martinsried, Germany

Abstract

Optical frequency combs have the potential to revolutionize terabit communications[1]. Generation of Kerr combs in nonlinear microresonators[2] represents a particularly promising option[3] enabling line spacings of tens of GHz. However, such combs may exhibit strong phase noise[4-6], which has made high-speed data transmission impossible up to now. Here we demonstrate that systematic adjustment of pump conditions for low phase noise[4,7-9] enables coherent data transmission with advanced modulation formats that pose stringent requirements on the spectral purity of the comb. In a first experiment, we encode a data stream of 392 Gbit/s on a Kerr comb using quadrature phase shift keying (QPSK) and 16-state quadrature amplitude modulation (16QAM). A second experiment demonstrates feedback-stabilization of the comb and transmission of a 1.44 Tbit/s data stream over up to 300 km. The results show that Kerr combs meet the highly demanding requirements of coherent communications and thus offer an attractive solution towards chip-scale terabit/s transceivers.

Optical interconnects providing multi-terabit/s data rates are the most promising option to overcome transmission bottlenecks in warehouse-scale data centres and world-wide communication networks. By using highly parallel wavelength division multiplexing (WDM) with tens or hundreds of channels in combination with spectrally efficient advanced

Authors contributions J.P. conceived and performed the data transmission experiments and analyzed the data. V.B. and K.H. conceived, designed and fabricated the devices, which were characterized jointly by V.B. and T.H.. M.L., Y.Y., D.W., P.S., and C.W. performed the data transmission experiments and analyzed. The feedback stabilization of the comb source for the second experiment was implemented jointly by J.P. and Y.Y.. J.Li, D.H., and R.S. contributed sub-systems to the data transmission experiments. The project was supervised by R.H., W.F., J.L., T.J.K. and C.K.. T.J.K. conceived and supervised the comb generation scheme and fabrication of the devices, C.K. conceived the data transmission and comb stabilization schemes and supervised the experiments. All authors discussed the data and wrote the manuscript jointly.

†now with Electromagnetic Fields & Microwave Electronics Laboratory (IFH), ETH Zurich, 8092 Zurich, Switzerland
#tobias.kippenberg@epfl.ch
*christian.koos@kit.edu

Europe PMC Funders Author Manuscripts

modulation formats, multi-terabit/s transmission capacity can be achieved while keeping symbol rates compliant with the electrical bandwidth of energy-efficient CMOS driver circuitry[10,11]. The silicon platform lends itself to integration of the associated photonic-electronic interfaces using large-scale fabless CMOS processing[12,13]. While integrated terabit/s WDM receivers have already been demonstrated[14], scalability of the transmitter capacity is still limited by the lack of adequate optical sources, especially when using advanced modulation formats that encode information on both the amplitude and the phase of the optical wave and therefore require optical carriers with particularly low phase and amplitude noise.

Optical carriers for WDM transmission are commonly generated by distributed feedback (DFB) laser arrays. Chip-scale transmitter systems with DFB lasers have been realized on indium phosphide (InP) substrates, showing potential for simultaneous operation of 40 channels[15]. However, these approaches cannot be directly transferred to the silicon photonic platform: Combining conventional DFB laser arrays with silicon photonic transmitters would require a multitude of chip-chip interfaces, increasing significantly the packaging effort. Hybrid integration of III-V dies on silicon substrates[16] avoids these interfaces, but scalability to large channel counts is still limited by the gain bandwidth of the semiconductor material and by thermal constraints. Moreover, spectral efficiency of DFB-based transmission systems suffers from the uncertainty of the individual emission frequencies, which is of the order of several GHz and requires appropriate guard bands to avoid spectral overlap of neighbouring WDM channels. For dense WDM with a channel spacing of, e.g., 25 GHz, the guard bands consume a significant fraction of the available transmission bandwidth.

These limitations can be overcome by exploiting optical frequency combs as sources for WDM transmission. Frequency combs consist of a multitude of equidistant spectral lines, each of which can be individually modulated[1,17,18]. The inherently constant frequency spacing of the comb lines enables transmission of orthogonal frequency division multiplexing (OFDM) signals[1] or of Nyquist-WDM signals[18] with closely spaced subcarriers. Frequency combs with line spacings in the GHz range can be generated by external modulation of a narrowband continuous-wave signal[19], by mode-locked lasers based on semiconductor quantum-dot or quantum-dash materials[20], or by exploiting parametric frequency conversion in Kerr-nonlinear high-Q microcavities[2]. In contrast to modulator-based approaches or mode-locked laser diodes, the bandwidth of Kerr combs is neither limited by the achievable modulation depth nor by the gain bandwidth of the active medium. Kerr combs can hence exhibit bandwidths of hundreds of nanometers[21], thereby covering multiple telecommunication bands (such as the C, L, and U band) with typical line spacings between 10 GHz and 100 GHz.

Kerr comb generation has been demonstrated using various different technology platforms[21] such as silica[2], calcium fluoride (CaF_2)[22], Hydex glass[23] or silicon nitride (Si_3N_4)[24]. Previous experiments have used such devices for data transmission with conventional 10 Gbit/s or 40 Gbit/s on-off-keying as modulation format[3,5,6]. However, Kerr frequency combs tend to exhibit multiplet spectral lines within a single resonance leading to strong amplitude fluctuations and phase noise[4,5]. Such fluctuations are prohibitive for spectrally

Europe PMC Funders Author Manuscripts

efficient data transmission with advanced modulation formats. While low phase-noise Kerr combs have been demonstrated recently[4,7-9], coherent transmission with Kerr combs has not yet been shown.

Here we report on the first experimental demonstration of coherent data transmission with amplitude- and phase-modulated carriers derived from a Kerr frequency comb. Coherent transmission allows to increase the information content and to boost the data rate, but also places stringent requirements on the phase and amplitude stability of the optical carrier. Our experiments build on systematic investigations of comb formation dynamics[4] to generate highly stable Kerr combs with low phase noise. We encode uncorrelated data on neighbouring comb lines using quadrature phase shift keying (QPSK) and 16-state quadrature amplitude modulation (16QAM) in combination with Nyquist pulses that have nearly rectangular power spectra and enable highest spectral efficiency. In a first experiment, we use polarization multiplexing and a symbol rate of 14 GBd on five QPSK and one 16QAM channel to obtain an aggregate data rate of 392 Gbit/s. This corresponds to a net spectral efficiency of 6 bit/s/Hz (3 bit/s/Hz) for the 16QAM (QPSK) channels. In a second experiment, we boost the data rate to 1.44 Tbit/s, encoded on 20 neighbouring comb lines and transmitted over a distance of 300 km. The comb is stabilized by a feedback loop that controls the pump wavelength. The results clearly demonstrate the large potential of Kerr frequency combs for future chip-scale terabit/s communication systems. As an integration platform for the comb source we chose silicon nitride (SiN) due to its reliability and its compatibility with CMOS processing[24].

The vision of a future chip-scale terabit/s transmitter is illustrated in Fig. 1a. A Kerr frequency comb is generated by exploiting multi-stage four-wave mixing (FWM) in a high-Q Kerr-nonlinear microresonator that is pumped with a strong continuous-wave (cw) laser[2,21]. The envisaged transmitter consists of a multi-chip assembly, where single-mode photonic wire bonds[25] connect the individual chips. In contrast to monolithic integration, this hybrid approach allows to combine the advantages of different photonic integration platforms: For the optical pump, III-V semiconductors can be used[15], while the high-Q ring resonator for Kerr comb generation could be fabricated using, e. g., low-loss silicon-nitride waveguides[24]. The optical carriers are separated and individually modulated on a transmitter chip, for which large-scale silicon photonic integration lends itself to realize particularly compact and energy-efficient MUX, and DEMUX filters[13] and IQ modulators[26,27].

Fig. 1b illustrates the basic principle of Kerr comb generation. Pump energy is transferred to the comb lines by two processes: Degenerate FWM, indicated as (1) in Fig. 1b, leads to formation of two side-modes by converting two pump photons into a pair of photons that are up- and downshifted in frequency. The magnitude of the frequency shift is determined by pump power and cavity dispersion[4]. A multitude of cascaded non-degenerate FWM processes, indicated as (2) in Fig. 1b, fully populates the remaining resonances. Kerr comb generators can be extremely compact – Fig. 1c shows a scanning electron microscope picture of a planar integrated SiN microresonator.

To maximize spectral efficiency, we use advanced modulation formats that encode data both on the amplitude and the phase of each comb line. This is illustrated in Fig. 1d for QPSK

Europe PMC Funders Author Manuscripts

and 16QAM: The complex electric field of the data signal is visualized by its in-phase (I, horizontal axis) and quadrature component (Q, vertical axis) in the complex plane. For QPSK, the I and the Q-component can assume two distinct values, leading to four signal states (symbols) in the complex plane. This represents an information content of two bits per symbol. Likewise, a 16QAM symbol can assume 16 states in the complex plane, corresponding to 4 bits of information per symbol. A densely packed optical signal spectrum as schematically depicted in the upper right corner of Fig. 1a can be achieved by using sinc-shaped Nyquist pulses with rectangular power spectra[28].

The viability of the concept illustrated in Fig. 1 is demonstrated in a proof-of-principle experiment with discrete photonic components. Kerr combs are generated with the setup depicted in Fig. 2. Pump light from a narrow-linewidth tunable laser source (TLS) is adjusted in polarization and amplified by an erbium-doped fibre amplifier (EDFA). Lensed fibres (LF) couple the light into a Si_3N_4 resonator with a free spectral range (FSR) of 17 GHz, Fig. 2. Inset 1 shows the waveguide cross section of the resonator and the calculated mode profile. The ring resonator waveguide is coiled up to reduce the footprint and exhibits a loaded Q-factor of 8×10^5. In contrast to the concept illustrated in Fig. 1, our experiments rely on comb generators with a single waveguide to couple pump light to the resonator and to extract the frequency comb. As a consequence, strong cw pump light can pass through the resonator and needs to be suppressed by a tunable fibre Bragg grating (FBG 1) at the output of the device. It has recently been shown that stability and phase noise of the Kerr comb are closely linked to the pump conditions[4]. Careful tuning of pump power, frequency, and polarization is therefore of prime importance. To adjust these parameters in the experiment we use two optimization criteria: The power of the newly generated comb lines measured behind a second fibre Bragg grating (FBG 2), and the radio frequency (RF) linewidth measured using a photodetector (PD) and electrical spectrum analyzer (ESA). A more detailed description of the adjustment of the pump parameters can be found in the Methods Section.

For data transmission, a 5 nm-wide spectral section (Fig. 2, Inset 5) is extracted from the comb using an optical band-pass filter (BPF). The carriers are modulated with QPSK and 16QAM signals at a symbol rate of 14 GBd. To enable dense packing of optical channels and to maximize the spectral efficiency, we use sinc-shaped Nyquist pulses with rectangular power spectra[28]. We transmit data streams on two orthogonal polarizations of a standard single-mode fibre (polarization-division multiplexing). The signal is detected with a commercial optical modulation analyser using a tunable laser as local oscillator. The experimental setup for data transmission and the digital post-processing techniques are described in more detail in the Supplementary Information (SI).

The results of the data transmission experiment are summarized in Fig. 3. Fig. 3a depicts the optical power spectrum of the modulated carriers for all six data channels. We did not flatten the comb spectrum prior to modulation for comparing the influence of different carrier powers on the transmission performance. As a quantitative measure of signal quality, we use the error vector magnitude (EVM), which describes the effective distance of a received complex symbol from its ideal position in the constellation diagram. When using a standard forward error-correction (FEC) scheme with 7 % overhead, the limits for error-free detection

Europe PMC Funders Author Manuscripts

are given by an EVM of 38 % (11 %) for QPSK (16QAM), see SI and the references therein. The constellation diagrams for each polarization of the six wavelength channels are depicted in Fig. 3b along with the measured EVM. All channels are well below the 38 % threshold for QPSK and channel 5 even shows well enough performance for 16QAM transmission. We transmit with a symbol rate of 14 GBd and choose QPSK for channels 1…4 and 6, and 16QAM for channel 5. Taking into account polarization multiplexing, we obtain an aggregate data rate of 392 Gbit/s. Considering the overhead of 7 % for FEC, the net spectral efficiency amounts to 3 bit/s/Hz for the QPSK and to 6 bit/s/Hz for the 16QAM channels.

When relating the EVM to the bit error ratio (BER), we assume that the signal is impaired by additive white Gaussian noise. The validity of this assumption is supported by the fact that the deviations of the measured from the ideal constellation points occur equally in all directions and do not show any sign of anisotropy. Excessive phase noise, in particular, can be excluded as a relevant impairment of data transmission as this would lead to constellation points which are elongated along the azimuthal direction. Instead, the signal impairments can be attributed to strong amplified spontaneous emission (ASE) originating from the high power pump EDFA. In the current configuration, ASE light passes straight through the resonator chip and superimposes the comparatively weak comb lines as additive white Gaussian noise; see SI for a more detailed discussion. The results indicate that Kerr combs are indeed perfectly suited for data transmission with phase-sensitive modulation formats.

In a second experiment, we use a resonator with a FSR of 25 GHz and a Q-factor of 2×10^6, which is higher than in the first experiment. This allows reducing the pump power to a level where filtering of the ASE noise from the EDFA is possible. To enable stable long-term operation of the Kerr comb for extended data transmission experiments, we implement a feedback loop, which locks the wavelength of the pump laser to a specified position within the resonance of the cavity, see Methods Section and SI for more details. In contrast to the previous experiment, we now flatten the comb lines prior to modulation using a programmable filter. For data transmission we use QPSK at a symbol rate of 18 GBd, and we insert up to four fibre spans of 75 km length between the transmitter and the receiver. The results are summarized in Fig. 4. We obtain 20 channels with an EVM below the threshold of 38 %. The total data stream amounts to 1.44 Tbit/s with a net spectral efficiency of 2.7 bit/s/Hz. This is the highest data rate that has ever been transmitted using a Kerr comb as WDM source.

In summary we demonstrate that Kerr frequency combs are well suited for high-capacity data transmission with phase-sensitive modulation formats. We show error-free transmission with data rates of up to 1.44 Tbit/s, spectral efficiencies of up to 6 bit/s/Hz, and transmission distances of up to 300 km. The received signals exhibit no sign of excessive phase noise. Assuming that the demonstrated spectral efficiency of 6 bit/s/Hz can be maintained over the entire bandwidth of the Kerr comb, we envision chip-scale transmitters providing aggregate data rates beyond 100 Tbit/s, only limited by nonlinear effects in the single-mode silica fibres used for transmission[29]. The combination of chip-scale Kerr frequency comb sources with large-scale silicon photonic integration could hence become a key concept for power-

efficient optical interconnects providing transmission rates that have hitherto been considered impossible.

Methods

Experimental setup and resonator design

The pump for Kerr comb generation is generated by an external-cavity laser (New Focus Velocity Model TLB-6728), a polarization controller (PC) and an erbium-doped fibre amplifier (EDFA) providing an output power of up to 37 dBm, see Fig. 2. The coupling loss between the lensed fibre and the Si_3N_4 chip amounts to approximately 3 dB per facet. In both data transmission experiments we pump a resonance near 1549.4 nm. The tunable fibre Bragg grating (FBG 1) at the output of the device suppresses the remaining cw pump wave by approximately 20 dB. The ring resonator consists of nearly stoichiometric Si_3N_4 grown in multiple layers with intermediate annealing steps[24]. The strip waveguides are patterned with electron-beam lithography and transferred to the substrate by reactive ion etching with SF_6/CH_4 chemistry. After etching, the structures are embedded into a SiO_2 cladding using low-pressure chemical vapour deposition (LPCVD). The waveguides are 2 μm wide and 750 nm high, and the sidewalls are inclined by 12° with respect to the vertical direction (Fig. 2, Inset 1).

The high-temperature growth technique used to fabricate the 750 nm thick layers of stoichiometric Si_3N_4 requires annealing at 1200 °C. This makes it difficult to fabricate SiN resonators in the framework of standard CMOS processes. One option to overcome these limitations is to use dedicated fabrication processes and multi-chip integration as illustrated in Fig. 1. Alternatively, it is possible is to deposit Si_3N_4 at 400 °C and to use UV thermal processing (UVTP) at lower temperatures to reduce the defect density. Both techniques are subject to ongoing research.

In the first data transmission experiment, the resonator exhibits a free spectral range (FSR) of 17 GHz and a loaded Q-factor of 8×10^5. Kerr combs are generated using an on-chip pump power of approximately 33 dBm. For the second experiment, we fabricated a resonator with a FSR of 25 GHz, which exhibits an increased Q-factor of 2×10^6. The comb is generated with approximately 29 dBm of on-chip pump power, and the measured line spacing deviates by less than 6 MHz from the designed 25 GHz. We expect that microresonators with further improved Q-factors will enable generation of broadband frequency combs with hundreds of lines that cover optical bandwidths of hundreds of nanometers – a multiple of what can be achieved with state-of-the-art distributed-feedback WDM laser arrays in InGaAsP technology.

In the first transmission experiment, amplified spontaneous emission (ASE) originating from the high-power pump EDFA was identified as the main source of signal impairment. To improve the signal quality, it is possible to filter out ASE by using a band-pass filter before the DUT as demonstrated in the second experiment. This was possible in the second experiment only, since we did not have any filters that could safely handle the 37 dBm of pump power right after the pump EDFA in the first experiment. In future configurations, the comb may be extracted by a second waveguide which is coupled to the microresonator as

Europe PMC Funders Author Manuscripts

Europe PMC Funders Author Manuscripts

illustrated in Fig. 1. This would avoid direct transmission of broadband ASE noise through the resonator device and could hence replace any additional ASE filters. Moreover, a second waveguide coupled to resonator will also render the FBG for pump light suppression superfluous as direct through-coupling of strong cw pump light is not possible.

Pumping schemes for low phase-noise Kerr combs

To obtain low phase-noise Kerr combs, the pump parameters are adjusted in two steps using the setup depicted in Fig. 2: First, the pump wavelength is periodically scanned across the resonance at a frequency of approximately 100 Hz while staying within the stop band of FBG 2 and continuously measuring the power conversion to the spectral region outside the stop band. During these scans the polarization of the pump signal is slowly varied to maximize the conversion. Maintaining this polarization, the detuning of the pump signal with respect to the resonance wavelength is then carefully adjusted until the initially broad RF spectrum (Fig. 2, Inset 3) exhibits a single narrow peak (Fig. 2, Inset 4). Note that the frequency axes of Insets 3 and 4 have different scales. For an on-chip pump power of approximately 33 dBm, the essential part of the optical comb spectrum is depicted in Inset 5 of Fig. 2. The comb lines for the first data transmission experiment were selected from this partial spectrum. Spectra of the comb used for the second experiment can be found in the SI.

The on-chip pump power needed for Kerr comb generation in the first and in the second experiment, still amounts to 33 dBm and 29 dBm, respectively. However, there is considerable room for future improvements – Kerr combs have been demonstrated with a threshold power as low as 50 μW in silica toroids[2]. In general, the threshold for Kerr comb generation scales inversely quadratic with the Q-factor of the resonator[21]. A 10-fold Q-factor improvement would lead to a reduction of the threshold pump power by a factor of 100, and the 2 W pump laser could be replaced by a 20 mW pump laser diode[2].

Feedback stabilization of a Kerr comb

To maintain low-phase noise comb states during an extended data transmission experiment, it is important to keep the pump conditions as constant as possible. In the first experiment, we found that the on-chip pump power is a crucial parameter and must be kept constant to approximately ± 5 % to maintain thermal locking of the cavity resonance to the pump wavelength[30]. The second experiment relies on stable comb generation for extended studies of data transmission performance. This is achieved by an independent control loop based on commercially available hardware (Melles Griot NanoTrak) that keeps the lensed fibres in the optimum coupling position. In addition, we implemented a second control loop using a commercially available PID controller (TEM Messtechnik LaseLock), which uses the power in the comb lines as feedback signal and controls the pump laser detuning such that thermal drifts of the resonator are followed by slight adaptation of the pump wavelength, see SI for a more detailed discussion. The combination of these two control loops enables stable Kerr comb operation over several hours without manual interaction.

Supplementary Material

Refer to Web version on PubMed Central for supplementary material.

Europe PMC Funders Author Manuscripts

Acknowledgements

This work was supported by the European Research Council (ERC Starting Grant 'EnTeraPIC', number 280145), by the Alfried Krupp von Bohlen und Halbach Foundation, by the Helmholtz International Research School for Teratronics (HIRST), by the EU-FP7 project BigPipes, by the Initiative and Networking Fund of the Helmholtz Association, by the Center for Functional Nanostructures (CFN) of the Deutsche Forschungsgemeinschaft (DFG) (project A 4.8), by the DFG Major Research Instrumentation Programme, by the Karlsruhe Nano-Micro Facility (KNMF), by the Karlsruhe School of Optics & Photonics (KSOP), by the Swiss National Science Foundation (NCCR Nano-Tera, NTF MCOMB), by a Marie Curie IAPP Action, by the Defense Advanced Research Projects Agency (DARPA) via the QuASAR program and by the European Space Agency (ESA) via a doctoral fellowship (V.B.). Samples have been fabricated at the EPFL Center for Micro- and Nanotechnology (CMI).

References

1. Hillerkuss D, et al. 26 Tbit s-1 line-rate super-channel transmission utilizing all-optical fast Fourier transform processing. Nature Photon. 2011; 5:364–371.
2. Del'Haye P, et al. Optical frequency comb generation from a monolithic microresonator. Nature. 2007; 450:1214–1217. [PubMed: 18097405]
3. Levy J, et al. High-performance silicon-nitride-based multiple-wavelength source. IEEE Photon. Technol. Lett. 2012; 24:1375–1377.
4. Herr T, et al. Universal formation dynamics and noise of Kerr-frequency combs in microresonators. Nature Photon. 2012; 6:480–487.
5. Pfeifle, J., et al. Microresonator-Based Optical Frequency Combs for High-Bitrate WDM Data Transmission. Optical Fiber Communication Conference; OSA; 2012. paper OW1C.4
6. Wang P-H, et al. Observation of correlation between route to formation, coherence, noise, and communication performance of Kerr combs. Opt. Express. 2012; 20:29284–29295. [PubMed: 23388754]
7. Herr T, et al. Temporal solitons in optical microresonators. Nature Photon. 2014; 8:145–152.
8. Li J, Lee H, Chen T, Vahala KJ. Low-Pump-Power, Low-Phase-Noise, and Microwave to Millimeter-Wave Repetition Rate Operation in Microcombs. Phys. Rev. Lett. 2012; 109:233901. [PubMed: 23368202]
9. Okawachi Y, et al. Octave-spanning frequency comb generation in a silicon nitride chip. Opt. Lett. 2011; 36:3398–3400. [PubMed: 21886223]
10. Miller D. Device requirements for optical interconnects to silicon chips. Proc. IEEE. 2009; 97:1166–1185.
11. Qian, D., et al. 101.7-Tb/s (370×294-Gb/s) PDM-128QAM-OFDM Transmission over 3×55-km SSMF using Pilot-based Phase Noise Mitigation. Optical Fiber Communication Conference; OSA; 2011. paper PDPB5
12. Hochberg M, Baehr-Jones T. Towards fabless silicon photonics. Nature Photon. 2010; 4:492–494.
13. Liu A, et al. Wavelength Division Multiplexing Based Photonic Integrated Circuits on Silicon-on-Insulator Platform. IEEE J. Sel. Top. Quant. 2010; 16:23–32.
14. Feng D, Qian W, Liang H, Luff J, Asghari M. High Speed Receiver Technology on the SOI Platform. IEEE J. Sel. Top. Quant. 2013; 19:3800108.
15. Nagarajan R, et al. InP photonic integrated circuits. IEEE J. Sel. Top. Quant. 2010; 16:1113–1125.
16. Park H, Fang A, Kodama S, Bowers J. Hybrid silicon evanescent laser fabricated with a silicon waveguide and III-V offset quantum wells. Opt. Express. 2005; 13:9460–9464. [PubMed: 19503148]
17. Witzens J, Baehr-Jones T, Hochberg M. Silicon photonics: On-chip OPOs. Nature Photon. 2010; 4:10–12.
18. Hillerkuss D, et al. Single-Laser 32.5 Tbit/s Nyquist WDM Transmission. J. Opt. Commun. Netw. 2012; 4:715–723.
19. Wu R, Supradeepa VR, Long CM, Leaird DE, Weiner AM. Generation of very flat optical frequency combs from continuous-wave lasers using cascaded intensity and phase modulators driven by tailored radio frequency waveforms. Opt. Lett. 2010; 35:3234–3236. [PubMed: 20890344]

Europe PMC Funders Author Manuscripts

20. Rosales R, et al. InAs/InP Quantum-Dot Passively Mode-Locked Lasers for 1.55-μm Applications. IEEE J. Sel. Top. Quant. 2011; 17:1292–1301.
21. Kippenberg TJ, Holzwarth R, Diddams SA. Microresonator-Based Optical Frequency Combs. Science. 2011; 332:555–559. [PubMed: 21527707]
22. Savchenkov AA, et al. Tunable Optical Frequency Comb with a Crystalline Whispering Gallery Mode Resonator. Phys. Rev. Lett. 2008; 101:093902. [PubMed: 18851613]
23. Razzari L, et al. CMOS-compatible integrated optical hyper-parametric oscillator. Nature Photon. 2010; 4:41–45.
24. Levy JS, et al. CMOS-compatible multiple-wavelength oscillator for on-chip optical interconnects. Nature Photon. 2010; 4:37–40.
25. Lindenmann N, et al. Photonic wire bonding: A novel concept for chip-scale interconnects. Opt. Express. 2012; 20:17667–17677. [PubMed: 23038318]
26. Dong P, Chen L, Xie C, Buhl LL, Chen Y-K. Gb/s silicon quadrature phase-shift keying modulator. Opt. Express. 2012; 20:21181–21186. [PubMed: 23037242]
27. Korn D, et al. Silicon-organic hybrid (SOH) IQ modulator using the linear electro-optic effect for transmitting 16QAM at 112 Gbit/s. Opt. Express. 2013; 21:13219–13227. [PubMed: 23736576]
28. Schmogrow R, et al. Real-time Nyquist pulse generation beyond 100 Gbit/s and its relation to OFDM. Opt. Express. 2012; 20:317–337. [PubMed: 22274355]
29. Essiambre R-J, Kramer G, Winzer P, Foschini G, Goebel B. Capacity Limits of Optical Fiber Networks. J. Lightw. Technol. 2010; 28:662–701.
30. Carmon T, Yang L, Vahala K. Dynamical thermal behavior and thermal self-stability of microcavities. Opt. Express. 2004; 12:4742–4750. [PubMed: 19484026]

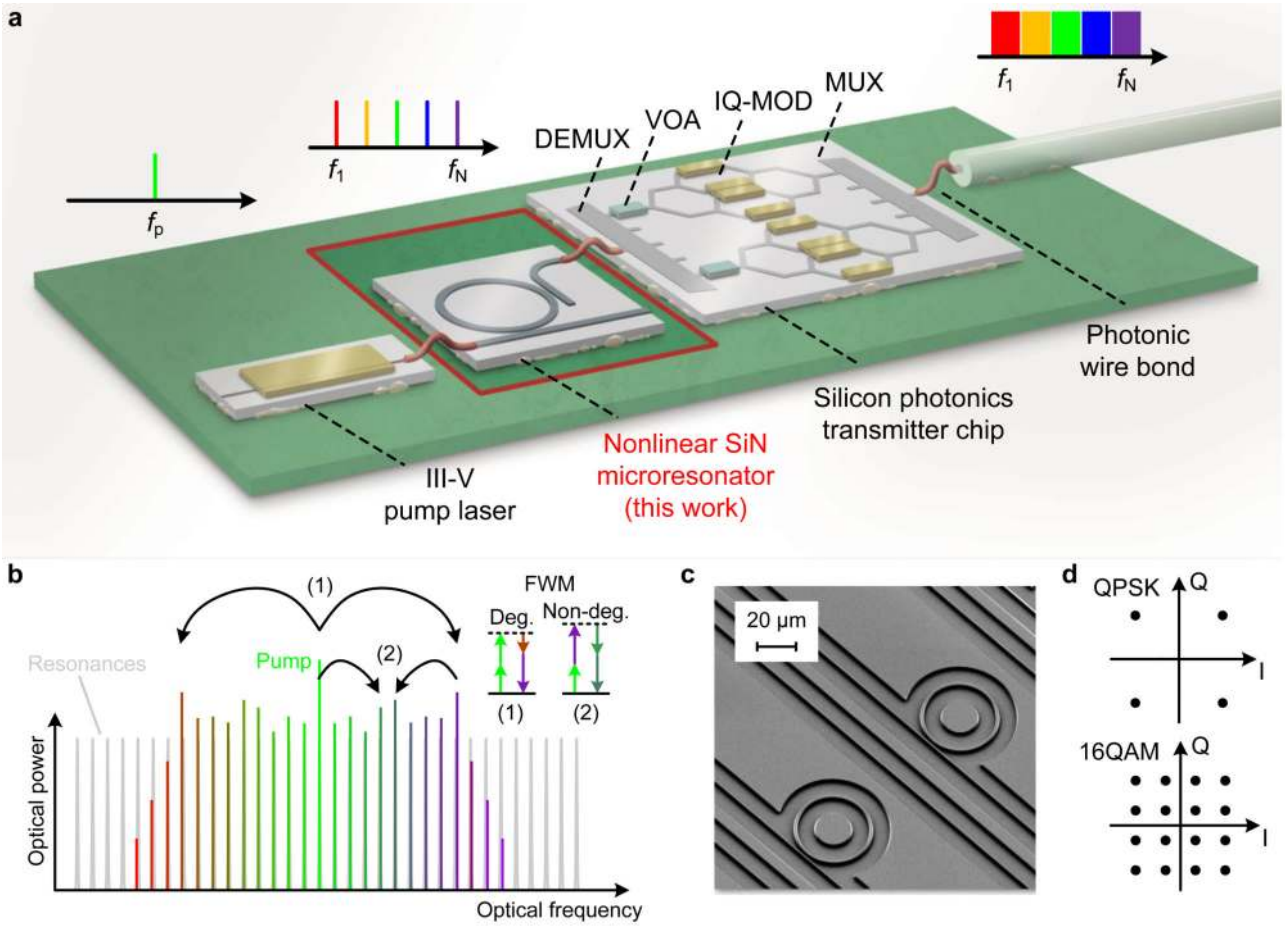

Fig. 1. Principles of coherent terabit/s communications with Kerr frequency combs

a, Artist's view of a future chip-scale terabit/s transmitter, leveraging a Kerr frequency comb source. The demonstration of coherent data transmission with Kerr combs is the subject of this work. (DEMUX: De-multiplexer, VOA: Variable optical attenuator, IQ-Mod: IQ-modulator, MUX: Multiplexer) **b**, Illustration of Kerr comb formation by multi-stage four-wave mixing (FWM). Degenerate FWM (1) converts two photons at the pump frequency to a pair of photons that are up- and downshifted in frequency, whereas cascaded non-degenerate FWM (2) populates the remaining resonances. **c**, Scanning-electron micrograph of an integrated high-Q SiN microresonator: High index-contrast SiN waveguides enable dense integration. **d**, Constellation diagrams of QPSK and 16QAM signals: Information is encoded both on the amplitude and the phase of the optical carrier, which can be represented by the in-phase (I, horizontal axis) and the quadrature component (Q, vertical axis) of the complex electrical field amplitude.

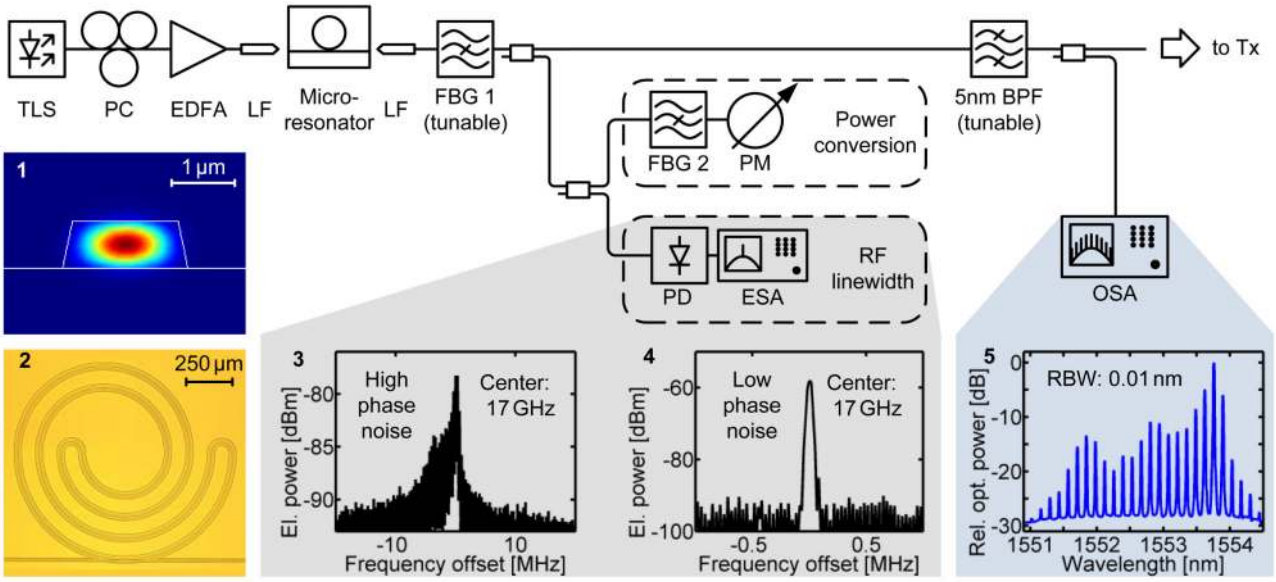

Fig. 2. Comb generation setup

The optical pump comprises a tunable laser source (TLS), a polarization controller (PC), and an erbium-doped fibre amplifier (EDFA). Lensed fibres (LF) couple light to and from the microresonator chip. A fibre Bragg grating (FBG 1) serves as a tunable narrowband notch filter to suppress residual pump light. For adjustment of the pump parameters, we monitor the power conversion from the pump to the adjacent lines (PM: Power meter). An electronic spectrum analyser (ESA) is used to measure the RF linewidth in the photocurrent spectrum of the photodetector (PD). A 5 nm-wide spectral section is extracted from the comb spectrum and used for data transmission. Insets: **1,** waveguide cross section and mode profile; **2,** optical micrograph of the resonator; **3,** RF spectrum of a high phase-noise comb state (RBW 10 kHz); **4,** RF spectrum of a low phase-noise comb state (RBW 30 kHz); **5,** Selected part of the comb spectrum (OSA: Optical spectrum analyser).

Europe PMC Funders Author Manuscripts

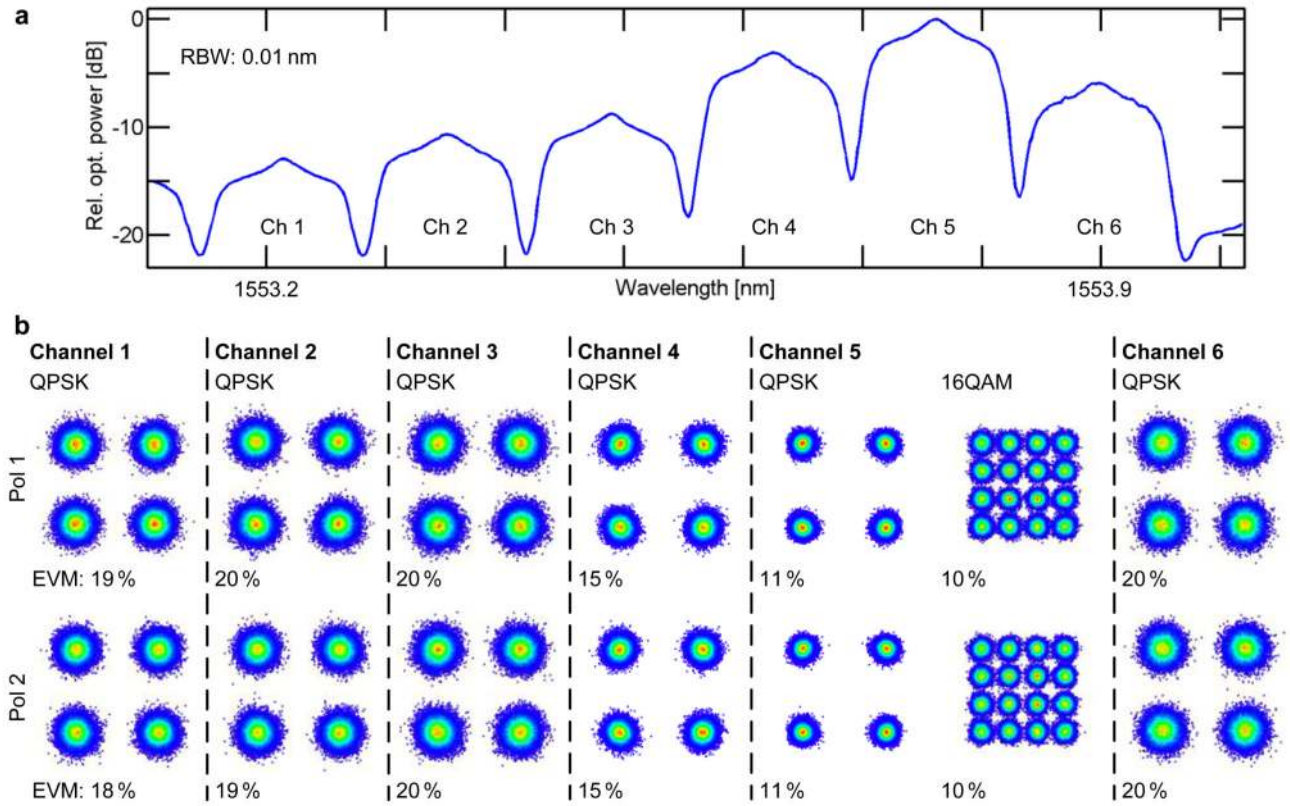

Fig. 3. Coherent data transmission using a Kerr microresonator frequency comb

a, Spectrum of modulated carriers for all six data channels, measured at the input of the optical modulating analyser (OMA). **b,** Constellation diagrams for each channel and for both polarizations along with the corresponding error vector magnitude (EVM). The constellation diagrams show no sign of excessive phase noise, which would result in constellation points that are elongated along the azimuthal direction. For QPSK, the BER of all channels is below 4.5×10^{-3}, which corresponds to an EVM of 38 %; for channels 4 and 5 the BER is even smaller than 10^{-9} (EVM < 16.7 %). The good quality of channel 5 enables transmission of a 16QAM signal with a measured BER of 7.5×10^{-4}.

Europe PMC Funders Author Manuscripts

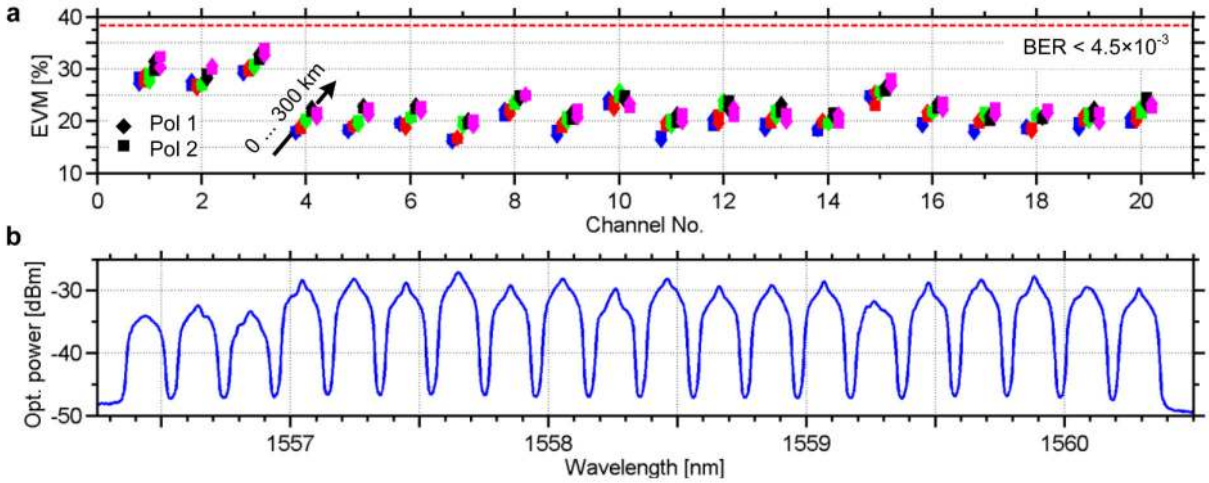

Fig. 4. Coherent terabit/s data transmission using a feedback-stabilized Kerr frequency comb

a, EVM for all data channels and fibre spans. The carriers are modulated at a symbol rate of 18 GBd using QPSK and Nyquist pulse shaping. Using polarization multiplexing at each of the 20 WDM channels, an aggregate data rate of 1.44 Tbit/s is achieved. The polarizations are distinguished by diamonds and squares, while the different fibre spans (0 km, 75 km, 150 km, 225 km, 300 km) are color-coded and slightly offset in the horizontal direction as indicated by the arrow. The red dashed line indicates an EVM of 38 %, which corresponds to the BER threshold for second-generation FEC. b, Optical spectrum of the 1.44 Tbit/s data stream. The spectrum was flattened prior to modulation.