UNCLASSIFIED

AD NUMBER

AD385553

CLASSIFICATION CHANGES

TO: **UNCLASSIFIED**

FROM: **CONFIDENTIAL**

LIMITATION CHANGES

TO:

Approved for public release; distribution is unlimited.

FROM:

Distribution authorized to U.S. Gov't. agencies and their contractors; Administrative/Operational Use; NOV 1967. Other requests shall be referred to Air Force Rocket Propulsion Lab., Research and Technology Div., Attn: RPPR-STINFO, Edwards AFB, CA 93523. NOFORN.

AUTHORITY

AFRPL ltr dtd 18 Jan 1978 AFRPL ltr dtd 18 Jan 1978

THIS PAGE IS UNCLASSIFIED

SECURITY

MARKING

The classified or limited status of this report applies to each page, unless otherwise marked.
Separate page printouts MUST be marked accordingly.

19

C89020

CONFIDENTIAL NOFORN

AFRPL-TR-67-282

835 PHASE I

COPY NO. ________

(UNCLASSIFIED TITLE)
COMBUSTION TAILORING CRITERIA FOR SOLID PROPELLANTS

LOCKHEED PROPULSION COMPANY
REDLANDS, CALIFORNIA

TECHNICAL REPORT AFRPL-TR-67-282

NOVEMBER 1967

GROUP – 4
Downgraded at 3 year intervals;
declassified after 12 years

DEC 5 1967

SPECIAL HANDLING REQUIRED

NOT RELEASABLE TO FOREIGN NATIONALS

Foreign National employees of the contractor or subcontractor(s) including those possessing Canadian or United Kingdom reciprocal clearances, are not authorized access to classified information resulting, or used in the performance of this contract unless authorized in writing by the procuring contracting activity.

AIR FORCE ROCKET PROPULSION LABORATORY
RESEARCH AND TECHNOLOGY DIVISION
AIR FORCE SYSTEMS COMMAND
UNITED STATES AIR FORCE
EDWARDS, CALIFORNIA

CONFIDENTIAL NOFORN

AFRPL-TR-67-282 LPC Report No. 835 Phase I

(Unclassified Title)

COMBUSTION TAILORING CRITERIA FOR SOLID PROPELLANTS

Lockheed Propulsion Company
P.O. Box 111
Redlands, California

GROUP – 4
Downgraded at 3 year intervals;
declassified after 12 years

SPECIAL HANDLING REQUIRED

NOT RELEASABLE TO FOREIGN NATIONALS

Foreign national employees of the contractor or subcontractor(s), including those possessing Canadian or United Kingdom reciprocal clearance, are not authorized access to classified information resulting from, or used in the performance of, this contract unless authorized in writing by the procuring contracting activity.

FOREWORD

This is the first Phase report issued under Contract F04611-67-C-0089. It is submitted by the authors 20 November 1967, and was prepared by N.S. Cohen and R.L. Derr, Engineering Research Department, Lockheed Propulsion Company (LPC). Contributors to this program include R.L. Coates, B.G. Doupe, W.R. Glace, T.L. Mills, C.F. Price, K.R. Small, and L.L. Stiles, all representing Lockheed Propulsion Company.

Work performed under this contract is monitored by the Air Force Rocket Propulsion Laboratory (AFRPL), Edwards, California. Project Officer is Captain Charles E. Payne, AFRPL/RPMCP.

Reported herein is research conducted between 15 March and 15 October 1967.

This report is classified CONFIDENTIAL-NOFORM because it makes reference to propellant formulations associated with the controllable solid rocket application, and presents detail breakdowns of formulation composition. This report contains confidential information extracted from Aerojet-General Corporation Document No. AFRPL-TR-65-147, Final Report 0855-81F, dated 19 July 1965.

Publication of this report does not constitute Air Force approval of the findings or conclusions. It is published only for the exchange and stimulation of ideas.

Captain C.E. Payne
AFRPL/RPMCP

ABSTRACT

The objective of this work is to study experimentally the fundamental combustion characteristics of solid propellants in a simulated motor environment, and to perform analytical work directed toward the scientific combustion tailoring of solid propellants for particular applications. The experiments are designed to investigate three basic phases of solid propellant combustion: steady state, transient conditions of instability and extinguishment, and induced oscillatory conditions. Propellants representing a wide range of both state-of-the-art and advanced constituents will be tested. In this phase of the program work has been directed towards the completion of a literature survey to establish the state of knowledge of the combustion of solid propellants. In addition, apparatus has been designed and fabricated for the experimental program. Techniques of using the apparatus have been established and pre-check testing of the equipment is in progress.

(The reverse is blank)

TABLE OF CONTENTS

Section Page

TABLE OF CONTENTS (Continued)

TABLE OF CONTENTS (Continued)

LIST OF ILLUSTRATIONS

LIST OF ILLUSTRATIONS (Continued)

LIST OF TABLES

(The reverse is blank)

SECTION I

INTRODUCTION

"The theoretical understanding of the combustion of solid propellants is not sufficient to be of much practical aid to the propellant chemist seeking formulations with improved properties." This quotation, made by Dr. Richard D. Geckler in a paper presented nearly fifteen years ago, remains true today despite extensive research in the intervening years. These writers have yet to meet a propellant development chemist who uses a computer program or combustion model of any kind to tailor solid propellants ballistically.

The problem involved becomes readily apparent when one looks at even a gross phenomenological model of combustion such as proposed by Corner(1) for double-base propellants. The model cannot be conveniently applied quantitatively because of the multitude of parameters that must be known numerically. Measurement of some of these parameters has been attempted experimentally, but generally under conditions representative of neither an integral propellant nor of an in-motor combustion environment. More sophisticated analyses only serve to complicate this problem and, as a result, application to combustion tailoring has not been analytically possible. Combustion tailoring therefore is an art based upon empirical information ranging from a great amount for some propellant families to a small amount for others, including advanced formulations of current interest.

The beginnings for the study of propellant ingredient combustion phenomena can be understood from the nature of the information called for in the theoretical analyses. Having arrived at a formidable barrier with respect to experimental study of a propellant, it was only logical to proceed with the constituents for which techniques were or could be made available for fundamental study. It was reasoned that through an understanding of the combustion mechanisms of a propellant's ingredients, including, e.g., measurement of decomposition or combustion kinetics, that the combustion mechanism of the propellant itself would be better characterized. Although there exists today considerable qualitative and quantitative information relative to the behavior of the propellant constituents, the manner in which these mechanisms manifest themselves in a propellant is not fully understood and is a subject of controversy. Consequently, the ultimate objective is not yet fulfilled. This has had, and will continue to have, adverse consequences regarding propellant development time and effort, particularly with the continued advent of new propellant families or the revival of previously dismissed ingredients to cover the ever-broadening applications spectrum.

To attempt to resolve existing questions and overcome some of the persisting deficiencies, the Air Force Rocket Propulsion Laboratory (AFRPL) contracted Lockheed Propulsion Company (LPC) to study the combustion of solid propellants in a motor environment. The program includes a comprehensive combustion literature survey to establish the present state of combustion knowledge and provide a baseline for the analytical and experimental work. A combustion research apparatus, representative of a motor amenable to instrumental monitoring of various facets of steady-state and transient combustion, is to be designed and fabricated. A series of well-characterized propellants will be used to check out the apparatus in the first year of this two-year program. In the second year, experiments will be performed with selected operational and advanced formulations. Subsequent to the literature review and paralleling the generation of experimental data, analytical work will be performed with the objective of combustion modeling and the establishment of combustion tailoring criteria.

Except for such effects as low combustion efficiency, erosive burning, and differences between strand and motor burning rates, the ballistic design procedures for steady-state solid propellant combustion are straightforward and present no particular problems. This is not the case where transient combustion behavior must be considered. While little attention has been paid to transient combustion processes during ignition and tail-off, acoustic combustion instability as a motor development problem provided the impetus for study within the past decade. More recently, transient combustion has become of great importance because of the controllable solid motor application and the associated interest in processes leading to extinguishment. At the same time, it became recognized by several research groups (Ref. 2 through Ref. 5) that the instability data being generated could, in theory, be used to calculate the effective combustion kinetics of a solid propellant in a motor environment. Such an application of transient combustion behavior would be an attractive new approach to the problem. The kinetics data so obtained establish not only the transient combustion behavior of a propellant but the steady-state behavior as well. Therefore, measurement and study of these parameters for a variety of propellants can be a significant step in the determination of kinetic effects on burning rate behavior. Because the combustion research apparatus is required to be able to characterize extinguishability regardless, this approach consequently has been adopted as an important part of the program.

Supplementing the transient combustion experiments will be series of experiments conducted under steady-state conditions. For example, knowledge of surface temperature is necessary to compute activation energies from the kinetic data. At the same time, data relevant to the energy balance across the burning surface can be obtained in the manner of Wenograd(6) for quantitative determination of energy generation from surface reactions. These data then can also be used for correlation with burning rate magnitude, π_K and erosive tendencies from additional measurements. It will be attempted to resolve differences between strand and motor burning rate data through review of the measurement techniques and assessment of convective and radiative heat transfer processes in the motor. The question of low combustion efficiency, generally attributed to incomplete metal combustion, will be examined through correlation of efficiency with product sampling, surface agglomeration, and particle residence time. The effect of metals on burning rate also will be studied. It is anticipated that the literature survey will assist in defining those experimental measurements and conditions promising to be most productive for each facet of combustion.

SECTION II

PROGRAM SUMMARY

The two-year combustion research program consists of five major tasks summarized as follows:

(1) Literature survey

(2) Design, fabrication, and pretest check of combustion research apparatus

(3) Experimental program with well-characterized propellants

(4) Experimental program with operational and advanced formulations

(5) Analysis and formulation of combustion tailoring model

The program will build upon previous analytical and experimental combustion research. A combustion apparatus representative of a motor environment will be designed and fabricated. The design concept was selected from a research apparatus used successfully for a number of years at LPC in the description of hybrid combustion processes. Supplementary equipment and instrumentation will be used in connection with the apparatus to improve its capabilities for transient as well as steady-state combustion research. Series of experiments will be performed with well-characterized, operational, and advanced formulations. The experimental program is designed (1) to provide the kind of combustion data that can contribute to analytical description of the combustion process, and (2) to enable quantitative determination of combustion kinetics in a motor environment, as related to recent theoretical developments. Analysis and correlation of data will be performed which, combined with information from a thorough literature review, will be used to attempt to establish combustion tailoring criteria.

1. EXPERIMENTAL PROGRAM

The Task 3 experimental program is designed to provide functional combustion data for a series of five propellants with well characterized ballistics and extinguishment properties. This program is divided into three subtasks, each classification following from a particular purpose and set of supplementary equipment:

- Ballistics and efficiency
- Instability and extinguishment
- Combustion kinetics

a. Ballistics and Efficiency

A series of tests will involve observation and measurement of the combustion process under steady-state conditions. These include photographic and photocell monitoring of the combustion zone, observation of particle accumulation and combustion, burning rate measurement, thermocouple monitoring of the combustion wave, measurement of convective and radiative heat flux from the combustion products, and sampling of combustion products. Tests will be performed for each propellant at various L* and pressure. Shadowgraph observation of the flow field will be made on a sufficient number of additional tests to characterize the flow under various conditions of pressure and L*, which are the independent variables for this test series. Knowledge of the flow will supplement photographic particle tracking data in defining particle residence time. In addition, a limited number of tests are suggested whereby the use of available spectrographic equipment to measure combustion zone gradients will be investigated.

b. Instability and Extinguishment

Another series of tests will involve study of the combustion process under the transient combustion conditions of L* instability, L* extinguishment, and $\dot{P}$ extinguishment. Critical relationships of L*, pressure, oscillatory frequency, and depressurization rate will be compared with those already established for the propellants and will be correlated with corresponding observations of the combustion zone. Tests will be made under vacuum conditions and ambient conditions to study and compare phenomena following temporary extinguishment or non-extinguishment with permanent extinguishment. The critical L*-pressure line will be crossed at a number of places and a number of d(lnP)/dt values about the known critical will be imposed.

c. Combustion Kinetics

In a third series of tests, the combustion zone will be observed under oscillatory conditions, a perturbation source being provided with the capability to oscillate at various frequencies. Recent work has indicated relationships between acoustic and L* combustion instabilities and between combustion instability and extinguishment through combustion kinetics properties. These analyses, moreover, reveal that the measurement of combustion and motor response to imposed perturbations, in conjunction with steady-state information and L* behavior, offers a promising method for the isolation and measurement of the surface and gas-phase reaction kinetics in a motor environment. These same kinetics properties determine the steady-state ballistics of a propellant. By varying perturbation frequency, response function, and phase, shift curves can be generated with which to verify the model's consistency. The self-excited L* instability data provide still another check.

The experiments conducted in Task 3 will be repeated in Task 4 for a number of selected operational and advanced formulations. Additional extinguishment tests will be made for propellants not previously so characterized. Specific formulations will be designated following a thorough review. It is anticipated that the generation of combustion data for a variety of propellant families for comparative study will reveal phenomenological descriptions which are of general applicability, or where modifications are required to account for specific processes, which may be unique.

2. ANALYSIS

Analysis of the experimental data will be conducted to assimilate the information obtained from the literature review and from each of the three test series for Tasks 3 and 4. Each of the data to be obtained has a specific purpose to provide certain information that can be fitted together to discern the overall picture of the combustion process and to improve existing models.

The properties of the combustion wave, including burning rate, thermal wave characteristic time, surface temperature, and heat of gasification, have a direct bearing on the propellant energy balance equation and on the subsequent determination of reaction kinetics. The calorimeter data will measure the influence of convective heat transfer on erosive burning (and consequent change in the thermal wave) and of radiative heat transfer in metalized propellant. Photocell measurement of flame intensity will supplement direct photographic observation of the combustion zone under steady-state, oscillatory, instability, and extinguishment conditions, and will serve to discern phase shifts between combustion oscillations, pressure oscillations, and input perturbations. These phase shifts, oscillatory frequencies, the magnitudes of the response functions, and the combustion wave data provide sufficient information with which to calculate the kinetics and activation energies of the surface and gas-phase reaction kinetics. These quantitative data, together with more qualitative observation of the nature of the burning surface and the flame, will provide the necessary information.

Particle tracking data in metalized propellants will be used to calculate residence time between the surface and the gas flow that turns toward the nozzle. Shadowgraph photography under various conditions with nonmetalized propellant will characterize sufficiently the flow field to establish particle residence time in the motor. Completeness of metal combustion, determined from product sampling, will be expressed as a function of pressure and residence time. Observation of metal agglomeration and ignition at the propellant surface will be correlated with efficiency data as a function of pressure (actually, of burning rate, which is expected to be a primary effect of pressure in promoting efficiency). These analyses also will include nonequilibrium combustion efficiency criteria derived at LPC. The influence of thermogen additives on the combustion process will be isolated and analyzed through comparison of the effects of metalized and nonmetalized counterparts, and the analysis will be accordingly extended. It also is planned to investigate catalyzed and uncatalyzed propellant.

The L* and P extinguishment characteristics of propellants will be expressed in terms of relationships between L* magnitude, critical pressure, L* instability frequency, and critical depressurization rate. These characteristics will be correlated with combustion kinetics data in conformance with one or more appropriate analytical models, and will be checked against kinetic data derived from the externally excited tests.

It is the quantitative determination of various facets of propellant combustion in a motor environment, particularly the reaction kinetics, which may help overcome past deficiencies in the development of combustion tailoring criteria.

SECTION III

COMBUSTION RESEARCH APPARATUS

(U) 1. REQUIREMENTS OF AN EXPERIMENTAL DEVICE TO STUDY THE COMBUSTION PROCESS IN A MOTOR ENVIRONMENT

a. Motor Simulation

The apparatus must simulate motor conditions to reproduce, as nearly as possible, the processes occurring within an actual motor. Specifically, propellant heating (including heat transfer and heat transfer gradients) and combustion product flow fields (including parallel gas velocity and velocity gradients) should be representative of actual motor conditions. Moreover, heat loss characteristics or, equally important, energy conservation within the apparatus, e.g., radiant heat, should reproduce the conditions in a motor. In short, the combustion research apparatus essentially should be a motor, but one designed to facilitate instrumental monitoring of the combustion process.

Small rocket motors equipped with windows are often used in the study of solid propellant combustion. For example, Huffington (7) used a small motor having a transparent case to study the phenomenon of chuffing. Interesting observations were made with this device on the appearance of the propellant surface during chuffing. Price (8), Strand (9), and Beckstead (3) all have employed window motors to study instability. The use of a window motor in these experiments has provided data for the phase relationships between pressure and radiation oscillations and also has permitted observation of aluminum particle combustion intermittent with and during L* instability.

Dickinson employed a window motor to study photographically both the transition from laminar to turbulent flow within a rocket motor grain and the appearance of the flame during longitudinal acoustic instability (10). High speed photography also was accomplished by Nachbar by employing a transparent quartz tube as a component of the combustion chamber of a small motor (11). Smoot and Price successfully used a windowed slab burner apparatus for photographic and shadowgraphic observation of the combustion zone of hybrid fuels (12 - 14). Results of these tests were extremely valuable in the understanding of the hybrid combustion mechanism, and consequent derivation of a regression rate equation.

A large number of experiments have been conducted with motors which make no provision for windows and in window bomb apparatus which do not simulate a motor. The proposed apparatus will have to combine the best features of both.

b. Operational Characteristics

To study various facets of propellant combustion, certain operational features are desirable. Of course it is necessary to vary pressure, but it should be possible to vary pressure independently of other governing factors, e.g., L*, to separate purely pressure effects from other effects, e.g., residence time. Similarly, it is desirable to vary L* independently of pressure. Grain neutrality also would be desirable.

In connection with L* and pressure variations, the apparatus should have the capability of varying both so that the regions of L* instability and L* extinguishment may be entered in the course of a test. This could be accomplished with a pintle nozzle; also, rapid retraction of the pintle would bring about rapid depressurization ($\dot{P}$) extinguishment. Pintle position should be monitored, and the pintle should be characterized so that nozzle throat area can be determined at a given instant of time. Tests should be made at both ambient and vacuum conditions to observe phenomena under temporary versus permanent extinguishment.

The apparatus also should be capable of driving oscillatory combustion. That is, it should be possible to impose low-amplitude pressure disturbances over a range of oscillatory frequencies. As discussed in Reference 2, monitoring the transient combustion properties of solid propellants by making use of the wealth of information generated in the area of combustion instability is a promising way to obtain measurement of propellant combustion kinetics in a motor. In this fashion, a rigorous description of both steady-state and transient burning can evolve, and the theoretician need no longer stop short of quantitative analysis for lack of sufficient kinetic data. This particular capability of the apparatus, properly used, may well be its most important feature. Price (15) has used a rotary valve emitting cyclic flow of an inert gas to measure acoustic losses of the nozzle.

Because the proposed program specifically (and combustion research generally) will involve advanced formulations, some of which produce toxic combustion products, the apparatus should be designed and located accordingly. It may be desirable that the apparatus, or at least portions of it, be transportable. Similarly, the apparatus should be designed for ease of operation and maintenance.

c. Suitable Observations and Measurements

Given a combustion apparatus adequately simulating motor conditions and possessing certain operational features, the question turns to the kinds of measurements and observations that can be made. Provision for these observations will, of course, affect the design of the apparatus.

Burning rate, its function of pressure, and gas flow velocity can be measured conveniently by sensing devices imbedded in the propellant at known locations. Provision can be made in the apparatus for lead wire inserts through which sensors are attached. The inserts can be made in a region of low gas velocity (forward end) and a region of high gas velocity (aft end) to discern erosion. Related to burning rate are the measurements of solid phase temperature profile (thermal wave) and imposed heat flux. The thermal wave is a consequence of burning rate, thermodynamic properties, and the energy balance across the propellant surface which is a consequence of the imposed flux. Therefore, these measurements can provide quantitative data regarding the energy balances used in combustion models. Measurement of the thermal wave with fine high-response thermocouples has previously been performed (6, 16-18). The thermocouples also can serve as the sensors to determine burning rate. Measurement of heat flux, including isolation of convective and radiative contributions, is feasible with suitable calorimeters (19-21).

Direct photographic or shadowgraph observation of the combustion zone and combustion product flow field can provide valuable insight to combustion phenomena and assist in the formulation of analytical models or the modification of existing models. Specifically, it is desirable to observe the flame location and appearance under various steady-state conditions and under transient conditions such as instability and extinguishment. Both direct observation and the supplemental monitoring of a photocell output can be used for this purpose. Direct observation also will reveal metal particle agglomeration, ignition, and combustion and trajectory phenomena in metalized formulations. Shadowgraph observation would materially assist in defining the combustion product flow field under various conditions, e.g., pressure and L*, which, in connection with particle tracking, would provide the necessary information for describing particle residence time having a bearing on particle combustion efficiency. LPC has performed observations of this type in both solid and hybrid combustion research (22). Photographic observation of the combustion zone has been a state-of-the-art technique for some time, although it has been difficult to define a single flame location from composite propellant combustion.

Routine determination of combustion species concentration and flame temperature through spectrographic observation of the combustion chamber is complex and not yet a state-of-the-art technique. However, useful information can be obtained regarding the combustion zone structure through determination of concentration, e.g., CN, NH, OH, or temperature gradients. This can be accomplished by focusing on various layers of the combustion zone and observing variations in characteristic spectral intensity (23, 24). LPC has used a spectrograph in fundamental combustion studies with capacitor discharge apparatus simulating motor heating rate, but tests were not made with a motor (25). The measurement would be difficult to define owing to the heterogeneity of composite propellants.

Meaningful direct sampling of combustion chamber species is, similarly, not state-of-the-art. The representativeness of such a sample, particularly with respect to the gaseous species, is highly questionable. The extremely rapid characteristic times for the gaseous reaction kinetics renders even exhaust sampling questionable. However, a meaningful exhaust sample of the metals and metal oxides of much slower kinetics can be obtained. Indeed, if it is contended that the residence time in the nozzle is small compared to that in the chamber, and if the back pressure is zero so that permanent rapid decompression extinguishment occurs via flow through the nozzle into the vacuum chamber, the particulate sample is very likely representative of the aft end of the combustion chamber. Moreover, it is believed that the metal combustion inefficiency and its dependence upon agglomeration (pressure) and chamber residence time (as correlated by L*) are factors that bear upon combustion efficiency. The characteristic times for the gaseous reactions are so short that it would be impractical to make a burner small enough to achieve reaction times of the same order as the residence time. Determination of metal combustion efficiency by direct sampling, therefore, is the most useful and probably the most meaningful sampling measurement.

d. Measurement of the Combustion Kinetics

The time-dependent processes occurring during combustion of a solid propellant have been subjected to considerable study, particularly regarding their effect on acoustic instability. The relationship of these processes to the overall residence time in the motor cavity has not received the same emphasis given to similar processes occurring in liquid engines. The ratio of combustion time to total residence time has an important effect on efficiency. In liquid engines, the combustion time is relatively long, and the combustion volume is designed to accommodate the required residence time for high efficiency. Because of the inherently high combustion efficiency in solid propellant motors, residence time has not been an important design parameter until relatively recently. It has gained importance, however, with the recognition that metal additives require appreciably longer combustion times than the oxidizer and binder components of the propellant. Residence time also has been recognized as having an important influence on the design of controllable rocket motors that are to be operated at very low pressure.

Accurate measurement of combustion times has been a difficult experimental problem for both liquid and solid propellants. The classical approach used in liquid propellant research is to make a series of test firings in which the only variable is the length of the combustion chamber. In each test, the mean value of the characteristic velocity, c*, is determined to indicate the degree of completion of the combustion process. For very short lengths, the combustion can be very far from completion, so that c* is very low. As the length is increased, the c* increases and passes through an optimum.

Transient state methods of determining combustion times also have been employed in liquid propellant research (26). In one method, the propellant flow into the combustion chamber is sinusoidally varied, and the resulting amplitude and phase angle of the combustion pressure response is measured. The combustion time then is computed directly from these measurements. In a second method, the propellant flow is abruptly interrupted at the injector for a short time, and the combustion time is computed from the rate of decay of pressure in the chamber.

Experimental approaches analogous to the classical methods for determining combustion times for liquid propellants can be employed in solid propellant research, and it is recognized that measurement of transient combustion characteristics is important. It is importan not only because of the current controllable solid rocket technological programs, but also because transient phenomena can be employed as a potentially useful combustion research tool. As an approach that is analogous to the controlled variation of liquid propellant injection rate, the flow of solid propellant products through the nozzle can be varied in a controlled manner using a pintle. The kinetics can be inferred from the resulting response and phase shift in combustion and chamber pressure. Alternatively, a more convenient technique than the oscillating pintle would be the admission of a small cyclic flow of inert gas as performed by Price (15). The data from these experiments can be compared directly with the results from L* instability tests, using a suitable combustion model to determine rate expressions as discussed by Coates, Cohen, and Harvill (2).

(U) 2. COMBUSTOR CONCEPT

The design philosophy of the combustor apparatus follows from work with a similar piece of equipment that has been in use at LPC in connection with fundamental hybrid combustion research. The two-dimensional slab burner apparatus located at the LPC Combustion Laboratory (Figure 1) provided considerable insight and fundamental information relative to hybrid combustion processes. Its use made it possible to predict accurately in-motor fuel regression rate and scale effects (22). However, as it now exists, the apparatus is not suited for this program. Designed to simulate hybrid combustion, its dimensions are too small to cope with the range of burning rates of which solid propellants are capable, and its design pressure limit is relatively low.

In choosing a combustor design, several factors have been considered:

- Motor simulation
- Compatibility with instrumental monitoring
- Ease of operation (turn-around time)
- Flexibility
- Convenient propellant sample preparation; grain neutrality

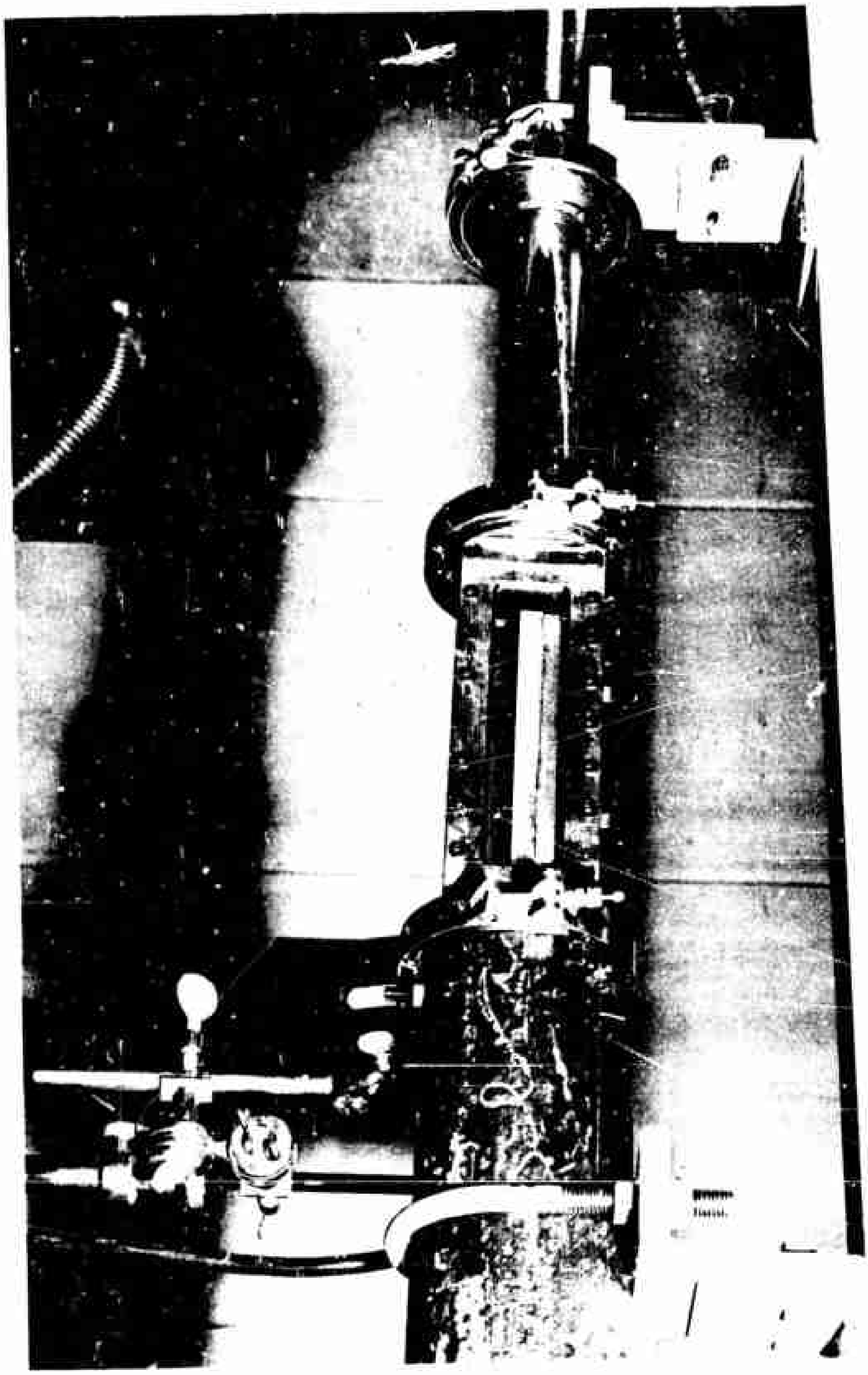

Figure 1 Slab Burner Apparatus for Fundamental Study of Hybrid Combustion

An optimum design evolved as a result of the desire to satisfy these criteria with a minimum of compromises.

Sketches of the combustor concept in two cross-sections are shown in Figures 2 and 3. As was the case with the hybrid fuel slab-burner apparatus, the rectangular geometry with opposed propellant slabs was seen to offer a number of advantages in satisfying the criteria for a good experimental burner. For example, it is important to be able to vary L* and pressure independently. Too often, researchers have changed pressure by varying throat area and leaving everything else constant, and then have attributed resulting effects to pressure while ignoring the fact of simultaneously changed residence time (L* or, probably more correctly, port-to-throat which influences port Mach number and which usually correlates with L* in internal-burners). With opposed slabs, the slab separation distance can be varied, without affecting pressure, by varying the thickness of the slab mounting block. Conversely, by judicious variation of the slab separation distance, pressure can be varied, leaving L* constant. Moreover, the burning surface is neutral with the sides inhibited. At the window section, the inhibitor can be a light grease coating that is less effective but which will allow observation of the combustion zone as the grain regresses. Any gradual failure of the grease coating as inhibitor of the side surface over this small area will not materially affect the overall neutrality, nor will it affect the observation of the combustion zone within the Fastax action time.

With cylindrical grain geometry, L* has been changed independently of pressure by adding inert chamber sections. This procedure is not flexible, introduces more heat loss, does not affect port-to-throat area ratio, and begins to lose motor simulation. Also, it becomes impractical to vary pressure independently of L*. Moreover, the symmetry of the cylindrical cross section does not permit one cross-section dimension to be smaller than another which results in too thick an optical path through the combustion gases for shadowgraph photography in a burner of reasonable dimensions. Finally, slots or holes would have to be made at the windows. An end-burner does not simulate the gas velocity flow field of more typical internal-burners, and heat losses can become excessive with an end burner. An internal-burning rectangular slab is easily processed and instrumented, and many can be prepared for rapid turn-around time by casting against insertion blocks in rectangular trays. No machining of the propellant is required.

The side walls of the combustor contain the windows and flush-mounted calorimeters, and are insulated to minimize heat losses. The exposed areas are greater than would exist with a cylindrical grain, except where inert chambers are added with the cylindrical configuration. The exposed area in the opposed slab configuration is believed to be a relatively minor compromise against eliminating heat losses entirely, compared to the overall advantages offered by the rectangular configuration. The walls of the combustor can be disassembled to re-insulate the side walls on occasion.

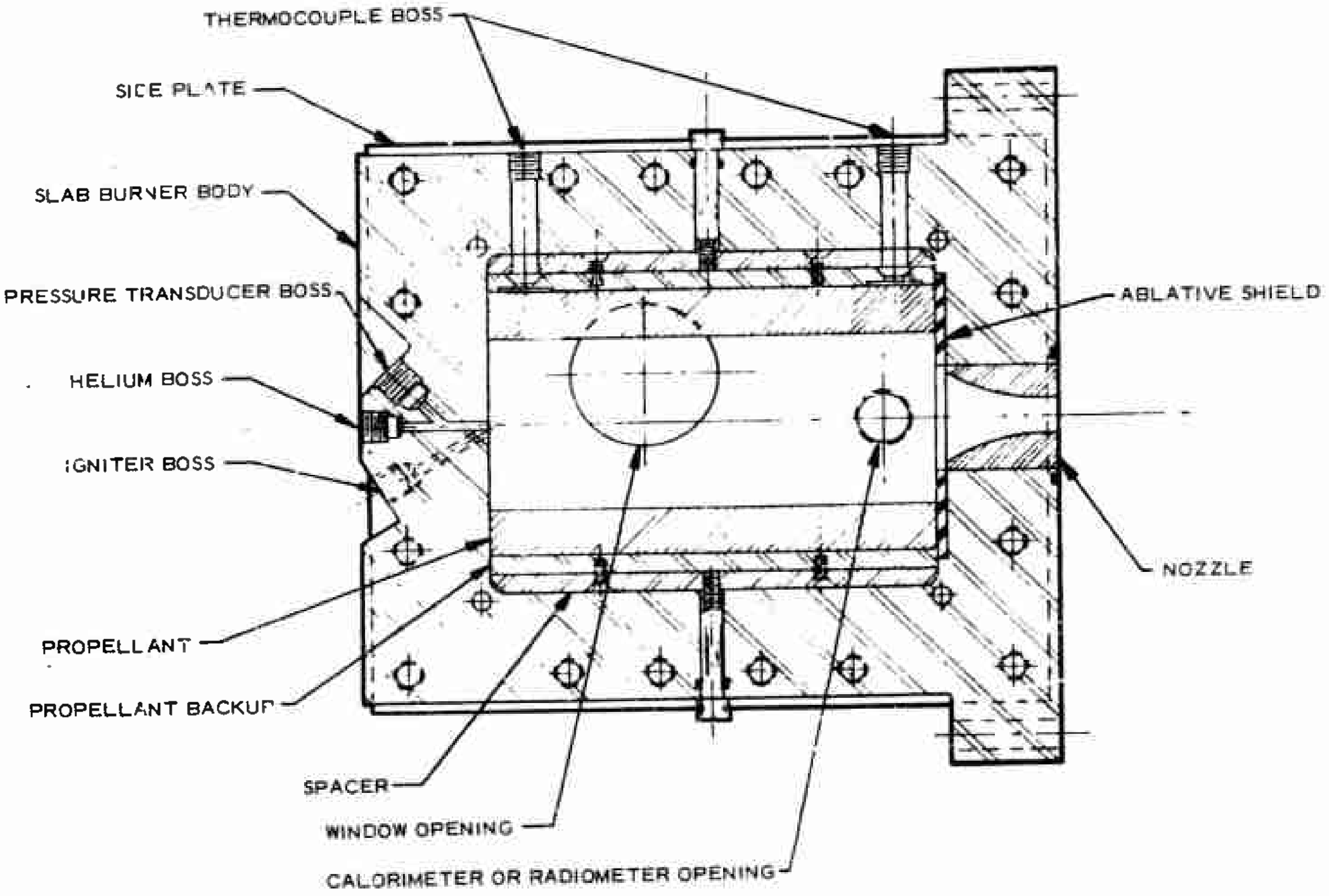

Figure 2 Side View of Combustor for Study of Solid Propellant Combustion

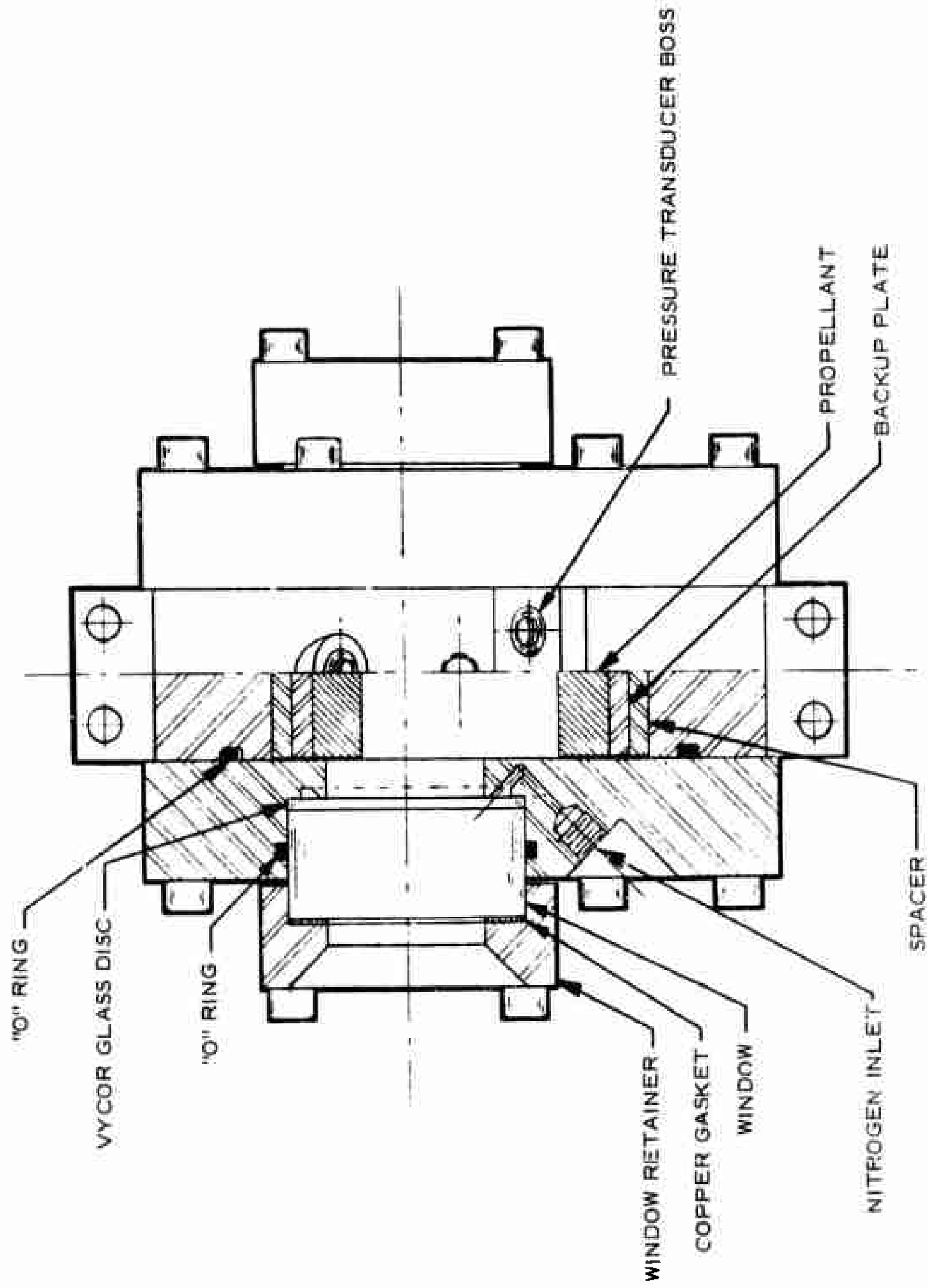

Figure 3 Front View of Combustor for Study of Solid Propellant Combustion

For the majority of the tests, all that needs to be done is to remove an end closure and the insertion blocks, and slip in new insertion blocks with the fresh slabs, and replace the end closure (with a new nozzle insert where necessary). The forward closure provides for igniter leads, a pressure transducer, and a port to emit and monitor the cyclic inert gas flow.

The windows are offset from the center both vertically and axially, to facilitate observation of the propellant surface regression and observe changes in the gas flow field from near the forward end to near the aft end (turning the side walls 180° for some of the tests). The windows are composed of quartz protected by a replaceable vicor disc. The window assembly is provided with a light nitrogen purge that will maintain window clarity at minimum interference with the combustion zone. There is a finite gap between the window and the propellant. The window is 2-1/2 inches in diameter, compromising between desirable view area, purge requirements, and stress. The actual view diameter is nearly 2 inches.

Without the insertion blocks and propellant, the internal dimensions of the combustor are 4 by 2 by 6 inches long. The 4-inch vertical dimension is a compromise between the desire to maximize L* flexibility (separation distance between the 5/8-inch thick slabs) and the need to keep a good portion of a slab within the view of the window of limited size. The web thickness is a compromise between the desire for a test of reasonable duration, but minimum L* variation in the course of a test. The width of the combustor is a compromise between optical path through the burner (gas cloud opacity) and the ratio of propellant-area-to-exposed-area to minimize heat loss. Finally, the length of the burner is sized to achieve reasonably representative residence time and to have sufficient surface area to keep the throat size from becoming too small. This is particularly important if a pintle is to be used to bring about instability and extinguishment. However, it is desirable to minimize sample weight, particularly with advanced formulations. The weight of each slab is approximately 0.4 pounds.

The burner essentially is a scale-up of the hybrid slab burner apparatus used successfully at LPC. The scale-up is to higher pressure and somewhat larger dimensions, as needed for the program. The geometry and propellant configuration, and the procedures for assembly and disassembly, are essentially the same.

(U) 3. SUPPLEMENTARY EQUIPMENT ASSOCIATED WITH SPECIFIC MEASUREMENTS

a. Measurements Associated with the Solid Propellant Energy Balance

<u>Solid phase thermal wave</u>. Wenograd used fine, high response Wollaston platinum-platinum 10 percent rhodium wire thermocouples imbedded in both double-base and composite propellants by either sandwiching between small bonded propellant samples or by imbedding directly into uncured samples. The preparation was facilitated by the use of micromanipulators

and with the aid of low-power magnification. The thermocouple dimension was made to be small compared to the thickness of the thermal wave; hence the need for fine material.

Wenograd successfully obtained measurements of the temperature profile in the solid, estimated the location of the surface (hence, surface temperature), and also was able to obtain a measurement of a portion of the gas-phase temperature profile before destruction of the thermocouple. The location of the surface was estimated from the nature of the temperature-distance curve. Theoretically, the gage temperature should be an exponential function of distance until chemical reactions indicative of surface phenomena manifest themselves. In double-base propellants, which are homogeneous, Wenograd observed perfectly smooth exponential temperature-distance traces up to a point where a sudden unmistakable change began to occur. The direction of the change indicates that exothermic surface reactions were occurring. The temperature at the break was consistent with measurement by radiation of surface temperature of similar propellants (27). In composite propellants, which are heterogeneous, the exponential dependency again was measured, but it was marked by temperature undulations about some mean. The undulations were correlated with oxidizer particle size, as might be expected, and should be even more noticeable with metals in the propellant. At some point, the undulating line sharply departed from exponential, the direction indicating endothermic reaction such as composite propellant decomposition before reaction of the decomposition products. In addition to the surface temperature measurement, measurement of the solid-side and gas-side temperature gradients at the surface provided a quantitative measurement of the energy balance across the surface and yielded an estimate of surface reaction energy.

The radiation technique surface temperature measurement, such as performed by Powling and Smith (27), is relatively involved and expensive, it cannot measure the thermal wave in the solid, it also is limited to low pressure so that radiation from the flame does not mask the surface, and it would be useless with metalized propellant. The observation of a crystallographic phase change in ammonium perchlorate by microtoming a quenched sample (28) does provide a temperature measurement, but only at the depth where the phase change occurs; it is not universally applicable, requires that the sample always be quenched, and does not provide an indication of transient phenomena during quenching. Contrary to this, the signal from the fine thermocouple can be used to trigger $\dot{P}$ extinguishment, and the ensuing transient temperature near the surface then can be monitored. The temperature decay during permanent extinguishment, or the temperature changes indicative of slow heating and re-ignition during temporary extinguishment, may be of great interest.

The thermocouple and sample preparation can be performed with a small sample of propellant as discussed in Section VI and Appendix I. The cured sample is then bonded on the slab mounting block with the lead wires through the block. The remainder of the propellant forming the slab then is cast over and around the sample in the tray. The cured slab-block assembly is slipped through an end of the burner, as described previously, with the lead wires lined up with the corresponding burner ports. Care must be exercised with the fine wire; however, the feasibility of its handling was demonstrated by Wenograd.

To promote thermocouple survivability and facilitate the implant, a thermocouple of specified design was prepared by the HY-CAL Engineering Company of Santa Fe Springs, California. Instead of Wollaston wire, the 0.3 mil sensor is comprised of much more rugged chromel-alumel. Chromel-alumel also puts out a much stronger signal than platinum-platinum/rhodium, and is much less expensive. Its chief disadvantage is its upper temperature capability as compared to platinum-platinum/rhodium[1], which is not necessary for the program because such temperatures are not reached until well out in the gas phase where the measurement is open to more serious question anyway. As shown in Section VI, the thermocouple junction has been successfully made without a bead. Consequently, the pressure can be increased about an order of magnitude from the Wenograd work yet retain the same sensor size as a proportion of the solid phase thermal wave thickness. The fine wire is joined to standard gage lead wire, the latter being all that is handled after the instrument is in place and the sample cured.

Burning rate. A measurement of in-motor propellant burning rate also can be provided by the thermocouple, supplemented by Fastax motion picture observation of the combustion zone and ballistic data reduction. The precise location of the thermocouple in the slab is known from the technique used to imbed the thermocouple assembly in the small sample. To monitor erosive effects, one thermocouple can be located near the forward end of the burner and one near the aft end.

Heat flux from combustion products. Conductive-convective and radiative heat transfer from the combustion products will be measured with calorimeters such as have been used in propellant ignition studies (19-21). It is of interest to compare the relative magnitudes of these modes between metalized and nonmetalized systems. Radiation and convection are considered the primary causes of differences between strand and motor burning rates. In the strand apparatus, there is no parallel gas flow and considerable radiant energy is lost to the surroundings.

The calorimeters are flush-mounted to the surface of the insulation along the side walls of the burner and lined up with the ports. A Conax fitting provides the seal and connector. There are two calorimeters, one to measure total flux and one sensitive to radiative flux only (Hy-Cal Model C-1320-A-600-072 water-cooled calorimeter and Model R-2049-A-300-072 gas-purged, water-cooled radiometer). They are mounted on opposing walls at the same axial position near the aft end of the burner.

In addition to isolating radiation heat transfer, the calorimeter measurements can supplement the data obtained from measurement of the temperature gradients at the propellant surface. These gradients are a

---

[1] -1372°C as compared to 1769°C, Ref. NBS Circular 561

result of the energy transfer processes in the combustion zone, of which the burning rate is a manifestation. Erosive burning would result in a change in the temperature gradients, which may be accountable by the measured convective heat transfer from the parallel gas flow.

b. Observation of the Combustion Zone and Product Flow Field

Spectrographic methods. At first glance, it would appear that spectrographic methods might offer a complete solution to the study of the combustion zone over a burning solid propellant. It is a remote, non-interacting method, offering such refinements as time resolution under ideal conditions. On closer examination, however, it can be recognized that only the gross identification of emitting species is an easy task in such an analysis. It is possible, through diligent study, to solve the complex interaction of temperature and emission characteristics and to be able to sort out the somewhat independent parameters. This has been done successfully in a number of cases where either the composition or temperature of the emitting gas was known. The simultaneous solution for both temperature and composition is time-consuming, and probably is beyond the scope of this program aimed at investigation of more than one chemical system. However, spectrographic methods will not be neglected. Without sophisticated analysis, spectrograms may be used to delineate major gradients of concentration and/or temperature in a flame structure, without differentiation between the causative effects. Much insight into the structure of a combustion zone may be obtained by such methods (23-25), and their limited use is clearly indicated in the present program. A one-meter grating spectrograph (Jarrell-Ash) is available for the purpose, and major radical species emission gradients can be measured with this instrument, e.g., CN, OH.

Photographic methods. Any optical method of investigation of flame processes is attractive because of the noninteractive characteristics. Spectrographic methods already have been discussed. In addition to this, of course, are direct photographic and shadowgraphic methods. In either method, the recording format may be that of intermittent stop-action movie or the single frame, high time resolution type. In most cases, it has been demonstrated that the motion pictures, although suffering slightly in time resolutions, offer the highly important advantage of time relation. Thus, the analyst may see numerous vignettes presented in such a manner that the development, as well as the existence, of phenomena may be observed, instead of viewing one frozen instant of time, perhaps unrelated to the average conditions of the experiment.

In flame photography experiments at LPC, as elsewhere, the advantage of direct color film presentation has been demonstrated. In addition to the "light" and "dark" areas usually representing areas of high and low emission, a further color differentiation is made available. Thus, a crude but effective time-resolved clue to spectral patterns is available from high-speed, color film motion pictures.

For particle tracking, for example, such direct photographic methods offer perhaps the only available method. As in any stop-action intermittent method, events occurring between exposures may become confused, leading to the use of higher and higher framing speeds. This can be carried to the extreme that a local perturbation of no relation to the average conditions is well-documented, but cannot be related. Coupled with this is the limitation of most available lens systems. As the image size of a given object is increased on the film plane, the usable (in-focus) range of depth becomes smaller. And, again, the relationship between successive frames becomes confused if identifiable objects are not within the field of view for more than one or two frames. On the other hand, the smallest practical field should be used in photographing an event, so that the finer details may not be lost because of the limited resolution of the camera-film system.

The above delineates some of the problems of direct photography, but it should not be implied that direct photographic methods are impractical. On the contrary, they are of utmost importance. The cited problems do indicate that optimum photographic techniques must be developed and employed for a given experimental configuration, and even perhaps for different propellant combinations within a given test vessel. It is not enough that a film be "well exposed," and a projectable image formed. A film should be created to best serve the analyst's purpose. Excellent photographs of the combustion zone have been presented by NOTS, using a Xenon arc for direct lighting (29, 30). Using a larger field of view, excellent particle tracking data were obtained from solid propellants with the hybrid slab burner (Figure 4). The trajectories and turning into the parallel stream are clearly visible.

Shadowgraphic methods. In addition to direct photography are shadowgraphic methods indicating the optical density instead of the emissivity of the chosen field. Shadow, Schlieren, and interferometric photography are prime examples. All of these techniques have a common disadvantage because they provide a two-dimensional presentation of density, and thus require a two-dimensional field for study. Every attempt has been made to design the experimental apparatus so that two-dimensionality is preserved. Under these conditions, any of the transmission methods can be of great use.

Taking them in their reverse order of complexity, the interferometer offers the most complete presentation of a flow field possible. Without the disturbance of probes or other sensors, the complete density (optical) field may be displayed. Coupled with this excellent display is a limitation of experimental conditions that almost precludes its use outside the most rigidly controlled laboratory. Schlieren photography offers the next compromise as far as information is concerned. Yet, even this method offers challenges. The requirement of two-dimensionality for any optical method places a nonuniform, transiently heated interface between the laboratory and the observer. In either the interferometer or the Schlieren method, such interposition of a reacting part of the system dooms the experiment to failure unless the time scale allows compensation

Figure 4 Particle Trading Observed with a Composite Propellant Containing 10 Percent Aluminum (Pressure = 100 psi). Framing Sequence is from Bottom to Top.

for such interfaces. On the other hand, shadowgraphic methods, although less sophisticated, allow a considerable distortion of the field due to such interfaces. Responding only to the second derivative of the optical density as far as presentation, and subject to minimum errors due to experimental interfaces, the shadowgraphic method appears to offer the best technique for studying flame and flow structure.

Experience with the examination of combustion flow fields at LPC (as evidenced by Figures 5 and 6) graphically illustrates the ability of shadowgraphic techniques to delineate flow fields and the advantage of movie shadowgraphs to illustrate phenomena. Successive frames of this type show the reaction to a change of wall fuel admission rate, corresponding to a perturbation of burning rate at a given location.

In summary, direct, color photography will be used for the purpose of observing the luminous flame and tracking luminous particles, and indirect shadowgraphic techniques coupled to high speed photography will display the flow fields above the propellant sample. In addition, as necessary, high time resolution particle and shadowgraphic exposures can be made at one-microsecond exposures. A photocell (International Rectifier Co., Model 49-06-14), directed at the combustion zone, will supplement the flame zone observations during steady-state and transient conditions.

c. Instability and Extinguishment - Combustion Kinetics

The initiation of L* instability and L* extinguishment, or rapid depressurization ($\dot{P}$) extinguishment, is brought about by the controlled retraction of a graduated pintle from the combustor nozzle. This technique has been applied by various groups, and is representative of one form of controllable solid motor under current development. The technique provides more flexibility and is more amenable to ballistics analysis than blow-out closures for rapid depressurization. For L* extinguishment, use of regressive-burning grains to reduce pressure introduces heat losses that can significantly affect the extinguishment. Moreover, the nature of the instability line renders it desirable to cross the line from a path of both decreasing pressure and L* to provide better definition of the line. This can be done more easily with pintle withdrawal, whereas with the regressive burning grain the L* increases as pressure decreases. Beckstead (3) employed a path of reduced L* at constant pressure by movement toward the nozzle of the end plate to which a propellant disc was attached. This technique, however, is not compatible with the combustor design from other considerations, and is not as versatile as the pintle for both types of extinguishment testing. The pintle area function can be recalibrated with inert gas flow if there is evidence of deposition or erosion from tests with metalized propellant.

A sketch of the pintle apparatus showing the operating mechanism is shown in Figure 7. The thoriated tungsten pintle is activated by a Tompkins-Johnson high pressure double-ended SH2B cylinder that can be operated

Figure 5 Shadowgraph of Hybrid Combustion Zone
(One Millisecond Exposure)

Figure 6 Shadowgraph of Hybrid Combustion Zone (One Microsecond Exposure)

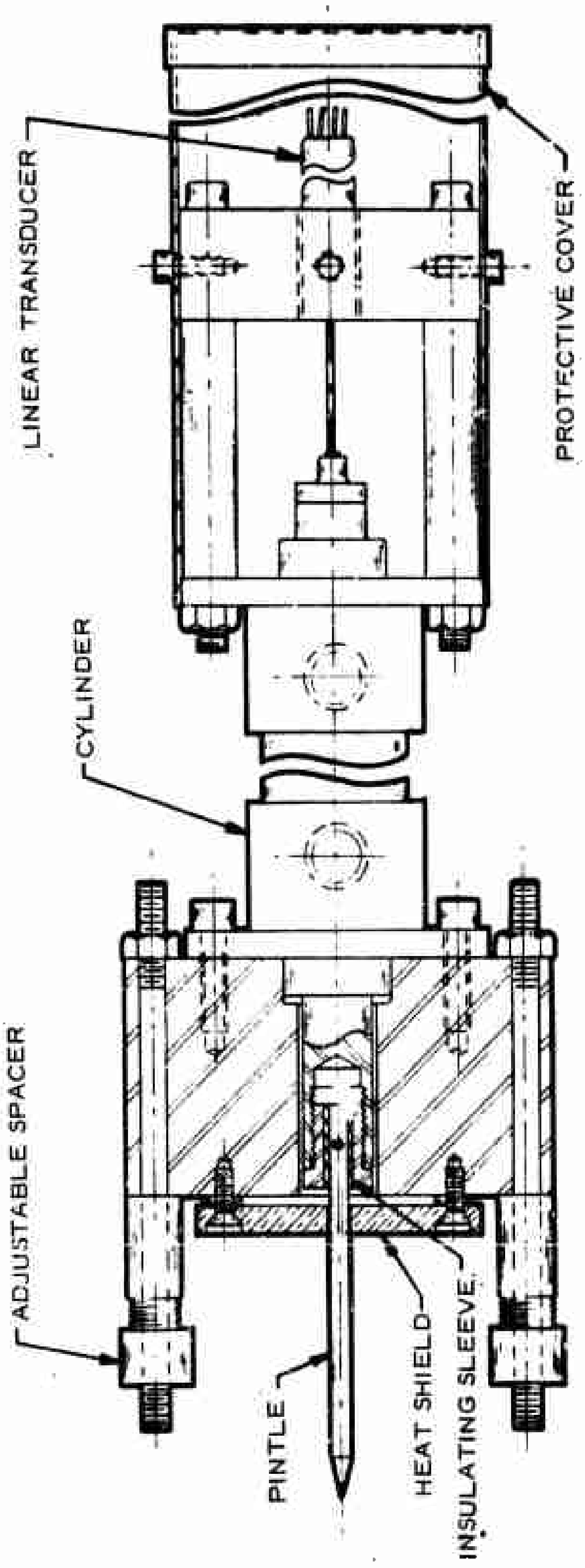

Figure 7 Pintle Extraction Apparatus

pneumatically or hydraulically. Pneumatic operation is preferable for the most rapid withdrawal rates, in order that the pintle action time be small compared to the chamber venting characteristic time so that the pintle area function does not enter into the transient ballistics. For tests where the pintle will be actuated by a signal from the thermocouple, extremely rapid response is required to prevent the combustion zone from regressing enough to destroy the thermocouple before extinguishment. If necessary, a Conax 1808-065 explosive latch pin assembly can be readily incorporated. For the slow withdrawal rates preferable for the L* tests, hydraulic operation provides better control. The pintle motion is monitored by a Collins SS-107 high response linear displacement transducer. The pintle, actuating mechanism, and linear transducer are mounted to the flange on the inside of a small vacuum chamber which, in turn, is connected to a 150 cu. ft. vacuum tank. A photograph of the pintle apparatus is presented in Figure 8, and of the combustor mounted to the small vacuum chamber (pintle inside) in Figure 9.

Excitation of oscillatory combustion for the purpose of additional motor-derived combustion kinetics data will be accomplished with an oscillatory flow of inert gas into the head-end of the motor. The perturbations will approximate a sine wave by flow through a rotary valve arrangement similar to that used at NOTS, the flow amounting to approximately five percent of the propellant flow. A sketch of the rotary valve is shown in Figure 10. Ten channels (grooves) per revolution reduce the RPM requirement for a given oscillation frequency by a factor of ten, and provide a smooth wave. The valve is driven by a Vickers MF24-3906-30BC-4 motor. A photograph of the apparatus is presented in Figure 11. The apparatus is mounted to the head-end of the combustor, as shown in Figure 12.

Oscillating the pintle to provide the perturbations was considered, but it was dismissed by the difficulty of acieving very high RPM. In addition, the area function of time would be uncertain if any deposition or erosion occurred (voiding any pre-or-post-calibration). Spinning a perforated wheel at the combustor exit also was considered, but again was ruled out by uncertainties in effective area. The gas flow system appears to be the cleanest and simplest approach, and most amenable to accurate data analysis. A port for inert gas flow also may be useful in other tests under conditions where additional smoke purging can improve observation. Moreover, the mechanism of operation of another form of controllable solid motor under current development can be represented by injecting reactive gases, thereby increasing the versatility of the apparatus.

d. Sampling of Combustion Products

Interpretation of the combustion of gaseous combustion species obtained by direct sampling has been questionable (31). The rapid kinetics typical of gas phase reactions, and response to changing environmental conditions, enable the composition to follow the pressure-temperature

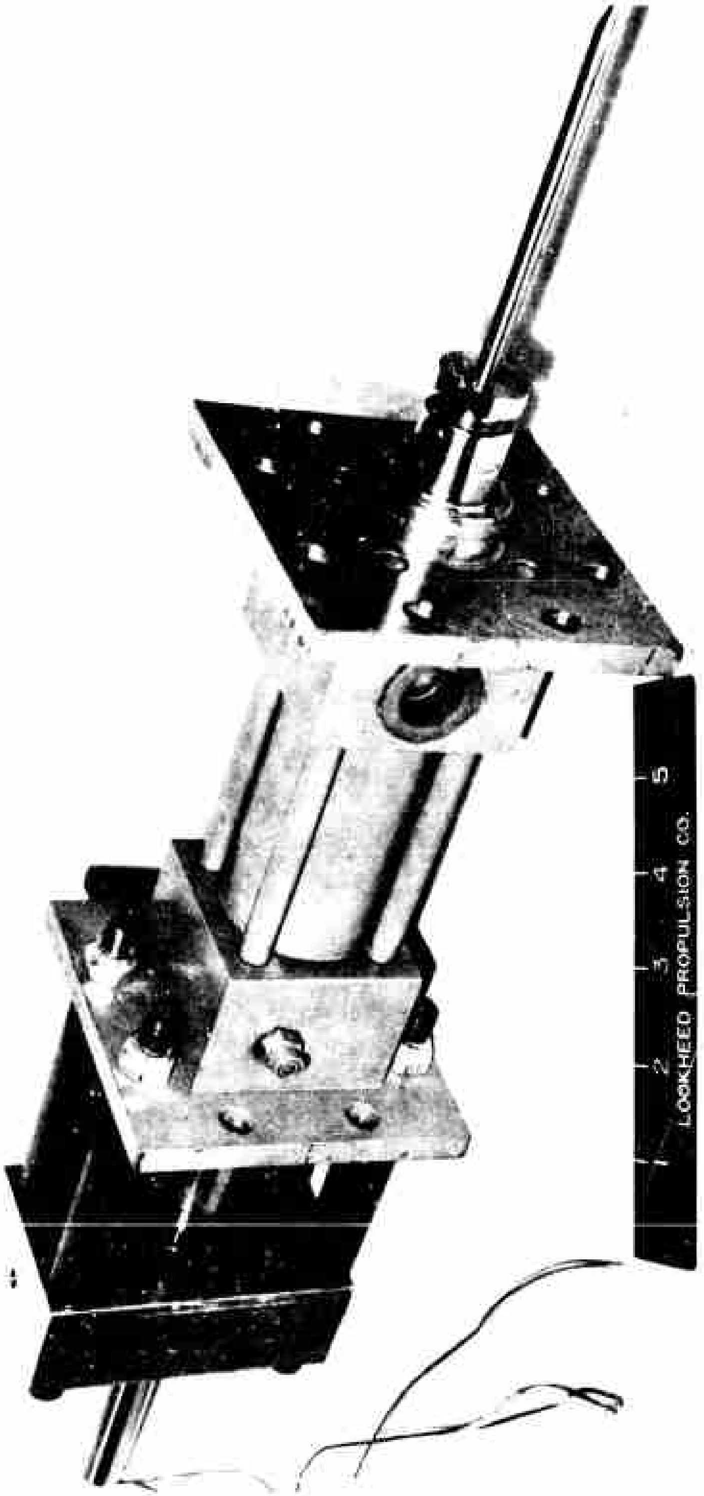

Figure 8 Photo of Pintle Extraction Apparatus

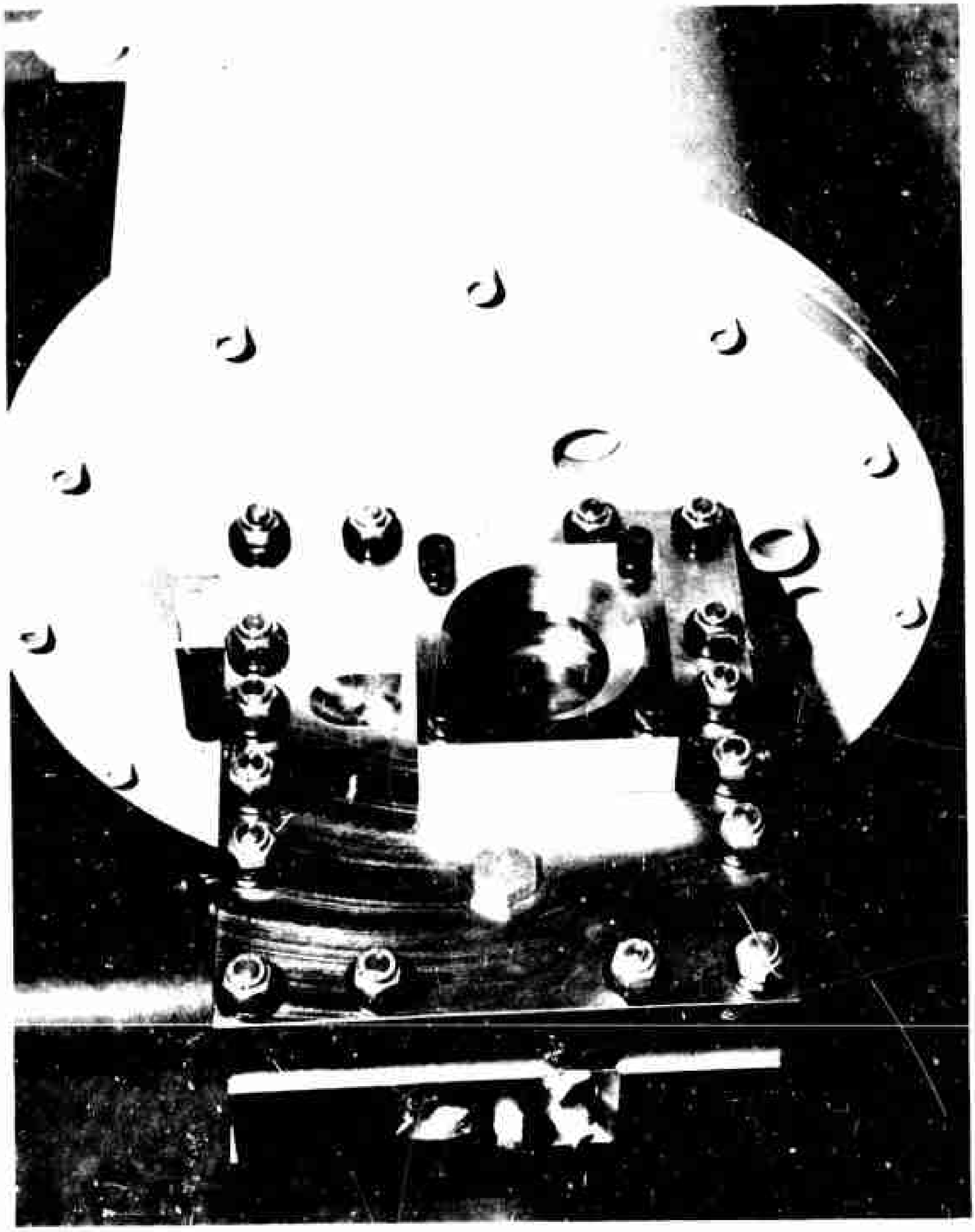

Figure 9 Photo of Combustor Mounted to Vacuum Chamber. Pintle Apparatus is Mounted to the Flange Inside Vacuum Chamber. Vacuum Chamber is connected to Large Vacuum Tank.

6838

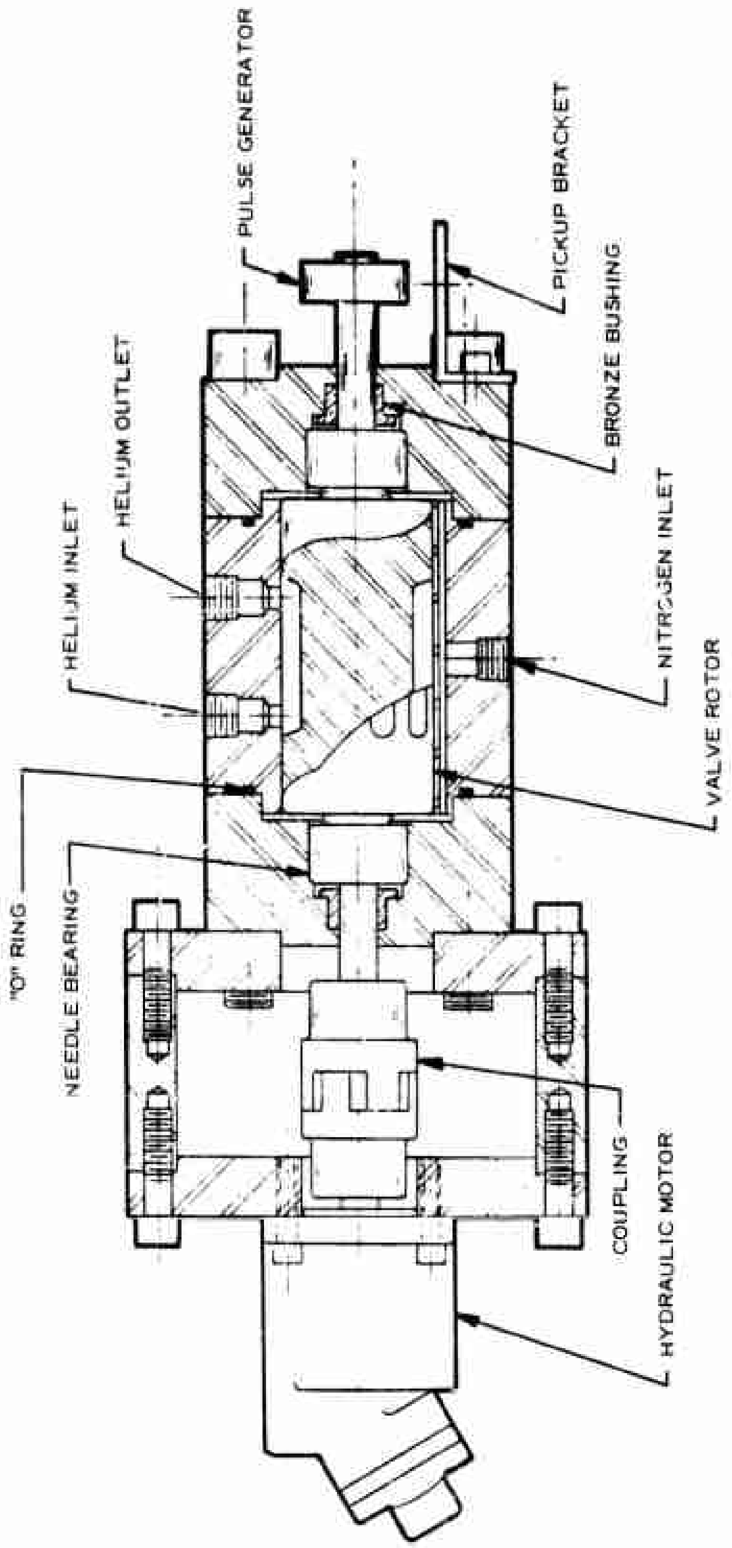

Figure 10 Sketch of Rotary Valve Assembly

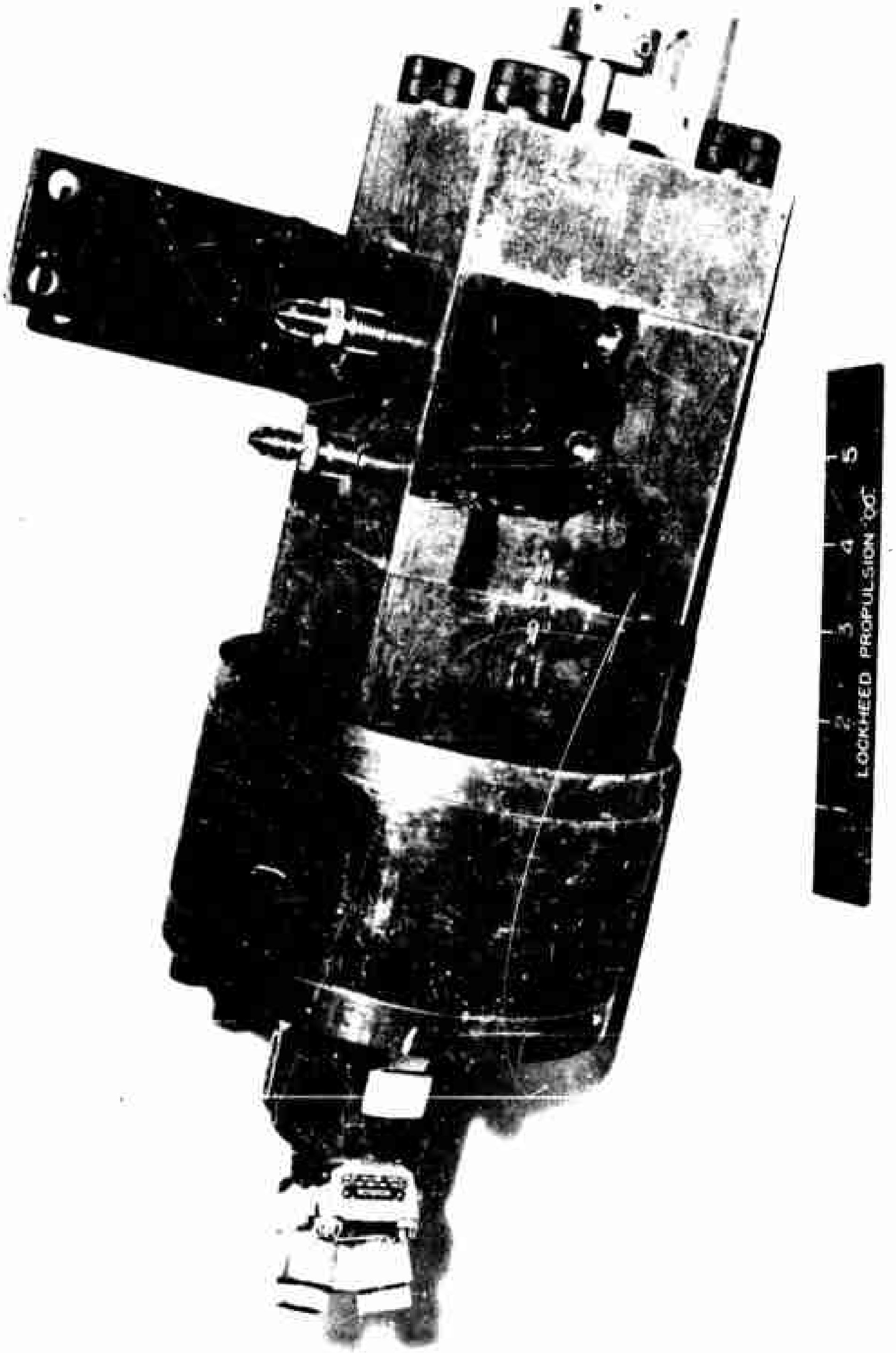

Figure 11 Photo of Rotary Valve Assembly with Hydraulic Motor

1589

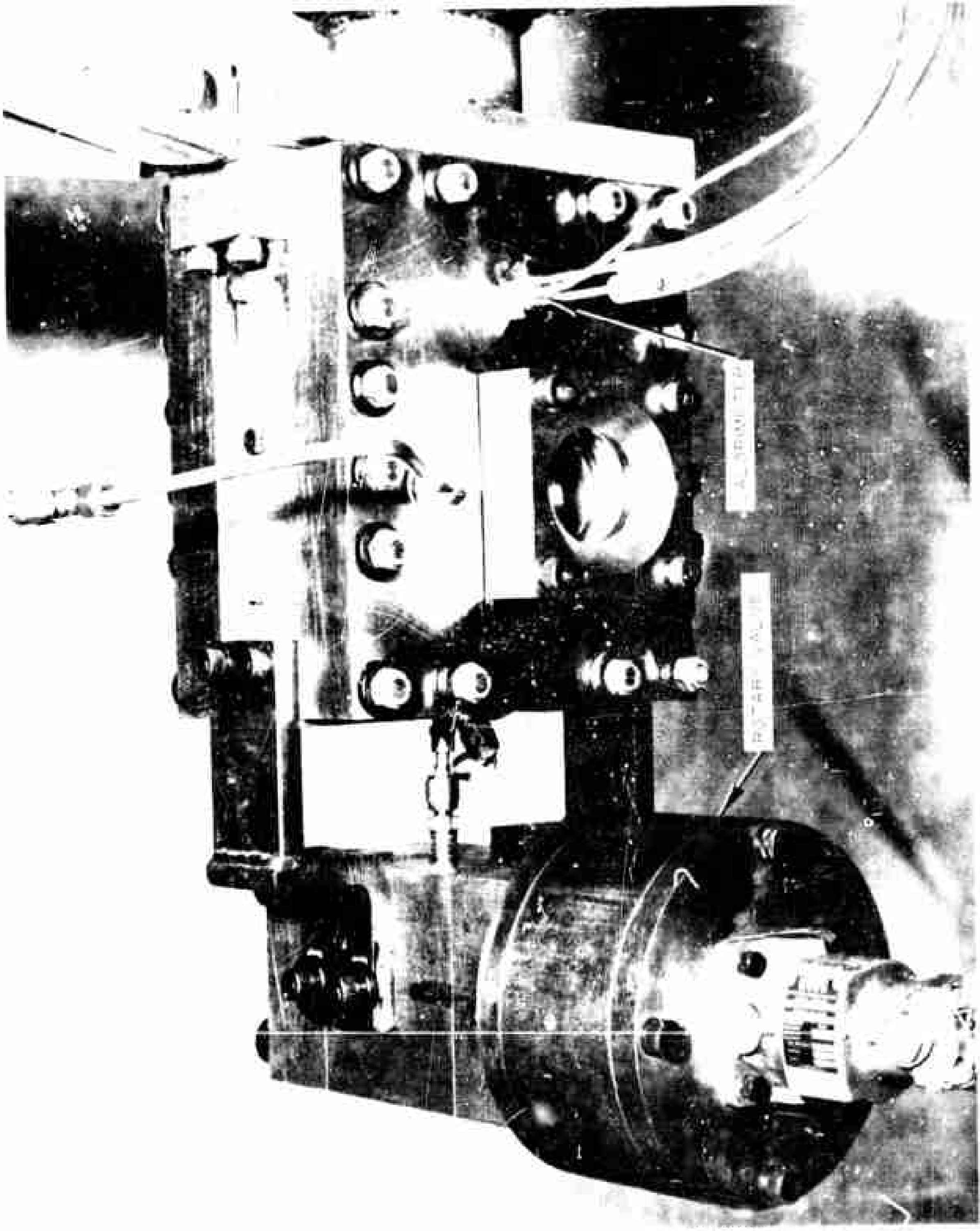

Figure 12 Photo of Rotary Valve Assembly Mounted to Combustor

history of its path from the combustion chamber to any probe, through probe-induced changes in the flow and while residing in the probe. Diluents or a vacuum in the probe are of no help because the reactions continue in the jet stream. Consequently, no satisfactory correlation or meaning ever has been achieved from the results of direct sampling of combustion gases.

In contrast, fruitful results have been achieved by direct sampling of metals and the products of metal combustion from rocket exhausts (31, 32). These results are attributed to the slow reaction kinetics of the metals (~two orders of magnitude slower than for the gases), which permits meaningful results to be obtained. However, even with metals, it appears necessary to sample in a vacuum environment instead of in an environment pressurized with inert gas diluent. Metal combustion will continue in the jet stream that sweeps the diluent aside, and the pressurization maintained by the diluent can sustain combustion (33). In an evacuated environment, however, combustion is extinguished in a fashion analogous to rapid depressurization extinguishment of solid propellants. As far as the metal particle is concerned, passage through the nozzle to an evacuated chamber is the same as being subjected to rapid decompression to a pressure level below its deflagration limit. If the residence time of the particle through the nozzle is small compared to that in the chamber, the degree of completeness of combustion as sampled is representative of that at the aft end of the chamber.

Combustion inefficiency, as determined by measurement of c^* with typical solid propellants, is universally attributed to incomplete combustion of the metal. The efficiency of nonmetallized systems is consistently 99 to 100 percent, except in instances where extensive heat losses are obvious. Even in aluminized propellants, c^* efficiencies often are close to 100 percent. However, the incorporation of advanced thermogens, such as suggested for study on this program, has resulted in considerably lower c^* efficiencies.

Operation at very low pressure, in the regions associated with L^* instability, also can produce low metal combustion efficiency (34, 35). The low pressure does have a tendency to slow the combustion kinetics, but of possibly greater importance are the reductions in motor residence time associated with the larger throat that brought about the reduction in pressure, and the promotion of agglomeration at low burning rate corresponding to low pressure. Price (35) has attributed low metal combustion efficiency under the L^* conditions as a primary cause for the enhancement of L^* instability and extinguishment in metalized propellants. If a nozzle is sized from a theoretical c^* for operation near the critical region, and this c^* is not realized because of inefficient metal combustion, the nozzle throat then can become too large for stable combustion to be sustained. Indeed, the large throat is basic to the design procedure for terminating a controllable solid motor (36, 37).

For the reasons mentioned above, namely the practicability of the sampling and the most useful information to be obtained, only the metal and metal combustion products will be analyzed by sampling. The sampling will be conducted with a cyclone separator apparatus (drawing presented in Figure 13. Cyclone separators offer one of the least expensive means of particle collection both from an operational and investment viewpoint. Collection efficiencies as high as 98 percent have been reported on particulate samples having particle sizes as small as 0.1 micron (38). Particle-laden gas enters a conical chamber tangentially and the cleaned gas leaves through a central opening. In the cyclone separator, the gas path involves a double vortex with the gas spiraling downward at the outside of the separator and upward at the inside. When the gas enters the cyclone separator, its velocity undergoes a redistribution so that the tangential component of velocity increases with decreasing radius. The spiral velocity in a cyclone separator may reach a value several times the average inlet gas velocity. A cyclone separator essentially is a settling chamber in which gravitational acceleration is replaced by centrifugal acceleration. Fine particles will tend to move toward the outside separator wall from which they are led into a receiver. The separator has the additional feature of a removable stainless steel collector to capture and hold the exhaust particles. A photograph of the apparatus is presented in Figure 14.

The feasibility of the chemical analysis of exhaust products of propellants, where metals and oxides will be present, has been established. A search of the recent literature in the area of analytical chemistry of metals and their respective oxides reveals X-ray diffraction to be the most favorable technique for the determination of metal-to-oxide ratios. Samples will be analyzed at Sloan Research Industries, Santa Barbara, California. Samples of tank residue will be dried and pulverized, packaged, and delivered.

(The reverse is blank)

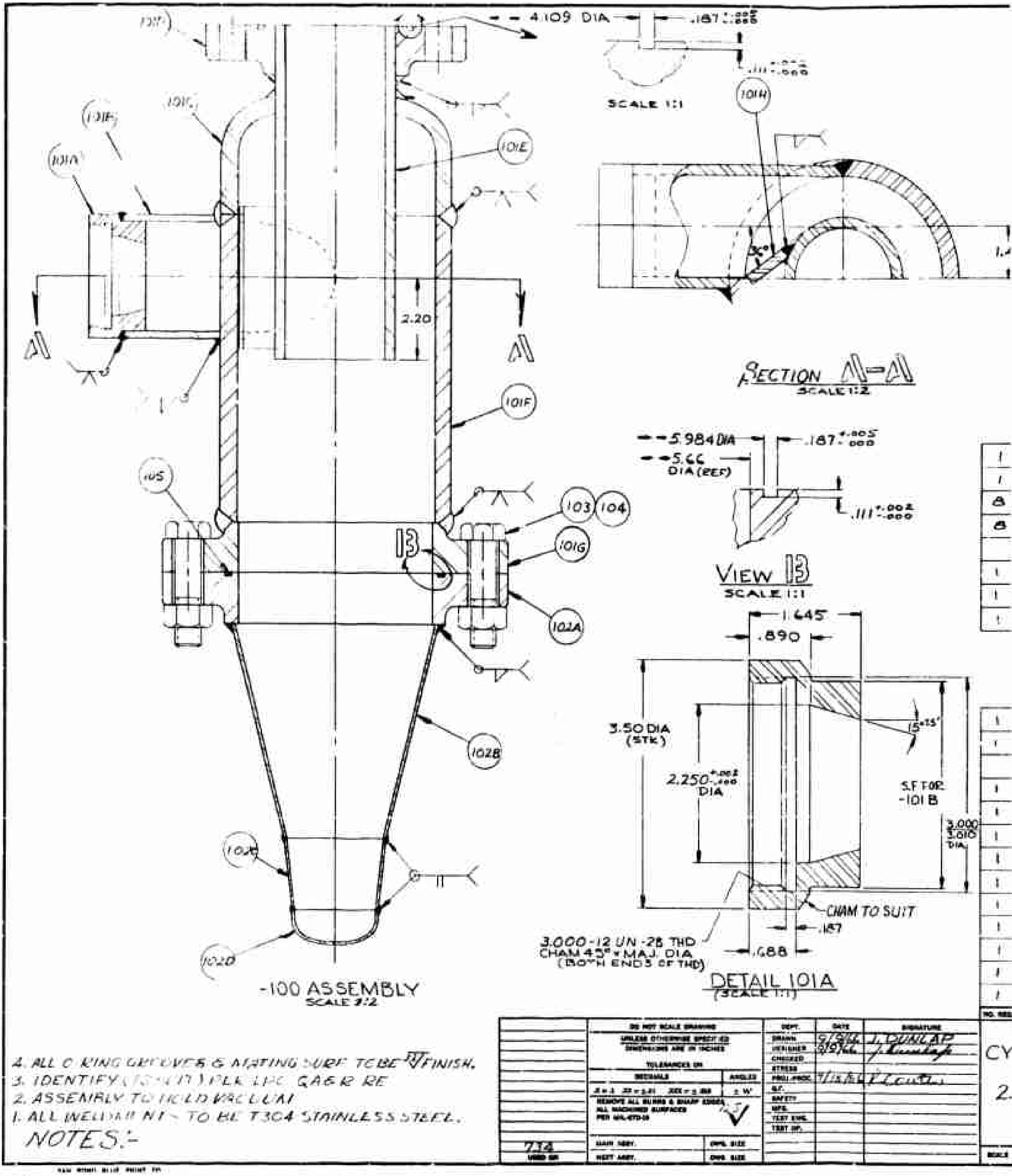

NOTES:-

1. ALL WELDMENT TO BE T304 STAINLESS STEEL.
2. ASSEMBLY TO HOLD VACUUM
3. IDENTIFY ( ) PER LPC GAER RE
4. ALL O RING GROOVES & MATING SURF TO BE 32 FINISH.

REVISIONS			
SYM	DESCRIPTION	DATE	APPROVAL

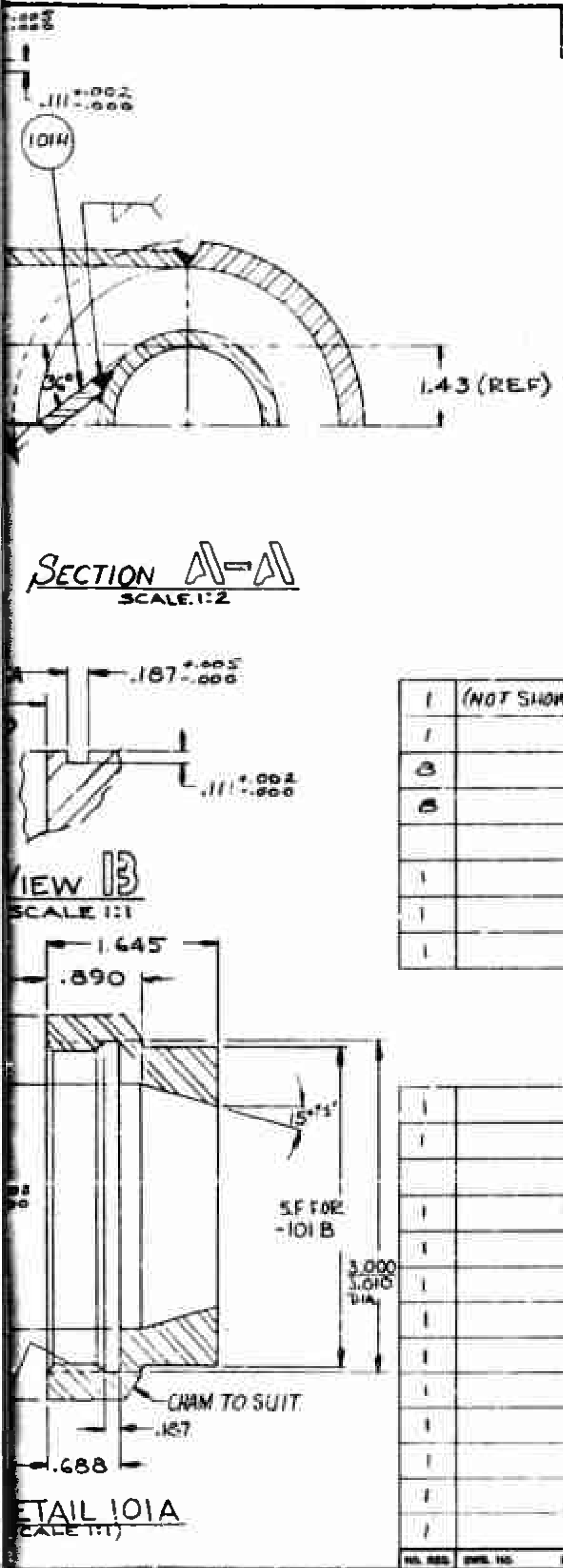

NO. REQ.	DWG. NO.	DET. NO.	TITLE — MATERIAL SIZE — DESCRIPTION
1	(NOT SHOWN)	106	2-243 COMP. VITON O-RING
1		105	2-258 COMPOUND VITON O-RING
8		104	¾-10UNC HEX NUT STL
8		103	¾-10 UNC × 3LG HEX HD CAP SCR STL
1		102D	2½ DIA S STL TUBE CAP
1		102C	3DIA × 2½ DIA S STL TUBE CONC. REDUCE
1		102B	6DIA × 3 DIA S STL TUBE CONC. REDUCER
1		102A	5φ NOM DIA 150# S STL SLIP-ON PIPE FLANGE
1		102	WELDMENT
1		101H	⅜ × 1¼ × 4 T304 S STL
1		101G	5φ NOM DIA 150# S STL SLIP-ON PIPE FLANGE
1		101F	6φ NOM DIA × 8¾ LG SCH80 S STL PIPE
1		101E	3φ NOM DIA × 9¾ LG SCH80 S STL PIPE
1		101D	3φ NOM DIA 150# S STL SLIP-ON PIPE FLANG
1		101C	6φ NOM DIA SCHED 80 S STL WELD CAP
1		101B	3φ NOM DIA × 6¼ LG SCH 80 S STL PIPE
1		101A	3½ DIA × 1¾ LG T304 S STL
1		-101	WELDMENT
1		100	ASSEMBLY

ERS 2619

COPY NO.

	DEPT.	DATE	SIGNATURE
	DRAWN	9/9/66	J. DUNLAP
	DESIGNER	9/9/66	
	CHECKED		
	STRESS		
ANGLES	PROJ. ENGR.	9/15/66	R. Coate
± ½°	Q.C.		
	SAFETY		
	MFG.		
	TEST ENG.		
	TEST OP.		

TITLE

CYCLONE SEPARATOR

2.5 DIA MOTOR

LOCKHEED PROPULSION CO.

LOCKHEED

REDLANDS CALIFORNIA

DWG. NO. ERS 2619

Figure 13 Cyclone Separator Drawin

(The reverse is blank)

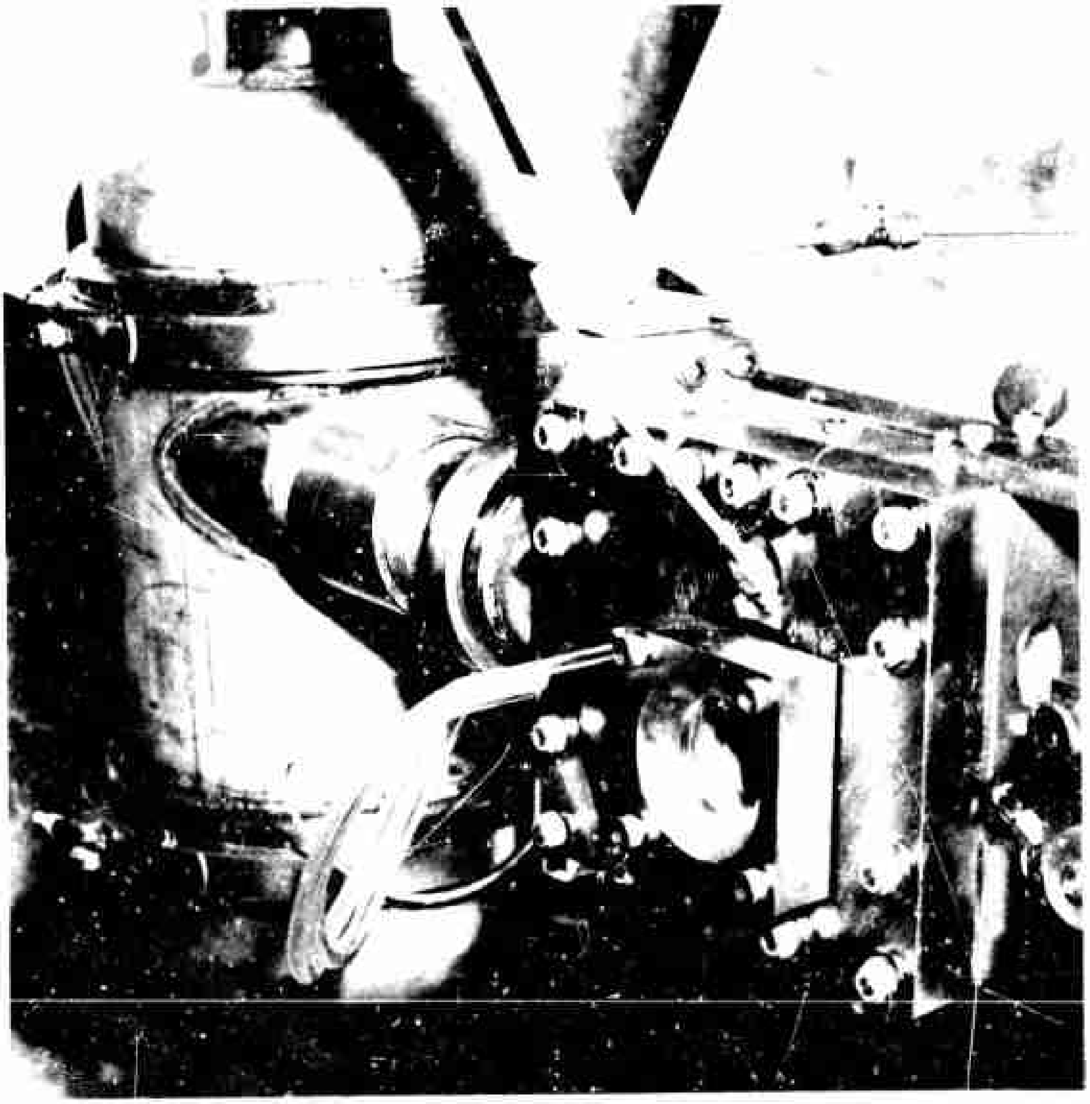

Figure 14 Photo of Cyclone Separator Mounted to Combustor and Vacuum Chamber

(The reverse is blank)

6839

SECTION IV

WELL CHARACTERIZED PROPELLANTS

(U) Experiments in the first year of this program will be performed with five control propellants possessing ballistics, instability, and extinguishment properties already characterized. Data to be obtained on this program with these propellants will be compared to the existing data, comprising a series of apparatus check-out testing. The formulations were selected as a result of a literature survey revealing that not too many propellants have been characterized in the literature with respect to both L* and $\dot{P}$ extinguishment properties. It was desired, in keeping with the general program objective, to select both composite and CMDB propellants. In addition, one of each should be metalized and non-metalized. Fortunately, there also existed data for a catalyzed version of one of the composite propellants constituting the fifth formulation. Consequently, the following formulations are considered suitable for these tests.

1. COMPOSITE PROPELLANTS

a. Nonmetalized Ammonium Perchlorate - Rubber Base

(U) Two propellants fitting this category have been extensively tested at the University of Utah, and they are designated as Utah F and Utah G. These formulations are summarized in Table I. Burning rate data are provided in Figure 15, and reported L* and P properties are shown in Figure 16 and in Table I. This information was given in References 3, 39, which also report additional propellant properties.

As Utah F is a catalyzed version of Utah G, the difference in observed ballistics characteristics suggests that these propellants would serve as excellent samples for making measurements and observations designed to provide basic understanding of the combustion and extinguishment processes.

b. Aluminized Ammonium Perchlorate - Rubber Base

(U) A suitable propellant in this category is one that was employed as a control formulation at the Aerojet-General Corporation, designated as Aerojet formulation 64-1106 (40, 41). Its properties are given in Table I, and in Figures 15 and 16.

From the standpoint of optical studies of the combustion zone in the combustor, the 10 percent aluminum content of this formulation may prove to be a disadvantage. If so, a backup characterized formulation can be the University of Utah TF formulation (3). Utah TF is analogous to Utah F, with the exception that it contains 5 percent aluminum, offering the additional advantage of a controlled experiment. However, the disadvantage of Utah TF is that it is not as representative of operational metalized propellants as is the Aerojet formulation. Apart from a change in binder,

TABLE I

RUBBER BASE PROPELLANT FORMULATIONS

	Aerojet Formulation 64-1106 (LPC Modified)	Utah G	Utah F
AP (+48 mesh)	51.80	-	
AP(MA, 3-9μ)	22.20	-	
AP(Type II, Size II)	-	41.0	40.0
AP(50% less than 15μ)	-	41.0	40.0
Copper Chromite (Harshaw)	-	-	2.0
Aluminum (25μ)	10.00	-	-
PBAA (Thiokol)	-	15.3	15.3
Epon 828 (Shell)	-	2.7	2.7
Butarez II	13.41	-	-
Circo Light Oil	2.00	-	-
HX 868 (3M Corp)	0.59	-	-

$\dot{P}$ Extinguishment Requirements

$\frac{d\ln p}{dt} = 150\ \text{sec}^{-1}$	$\frac{d\ln p}{dt} = 50\text{-}60\ \text{sec}^{-1}$	$\frac{d\ln p}{dt} = 600\text{-}800\ \text{sec}^{-1}$
for initial pressures from 150-600 psi	for initial pressures from 50 to 165 psi	for initial pressures from 50 to 165 psi

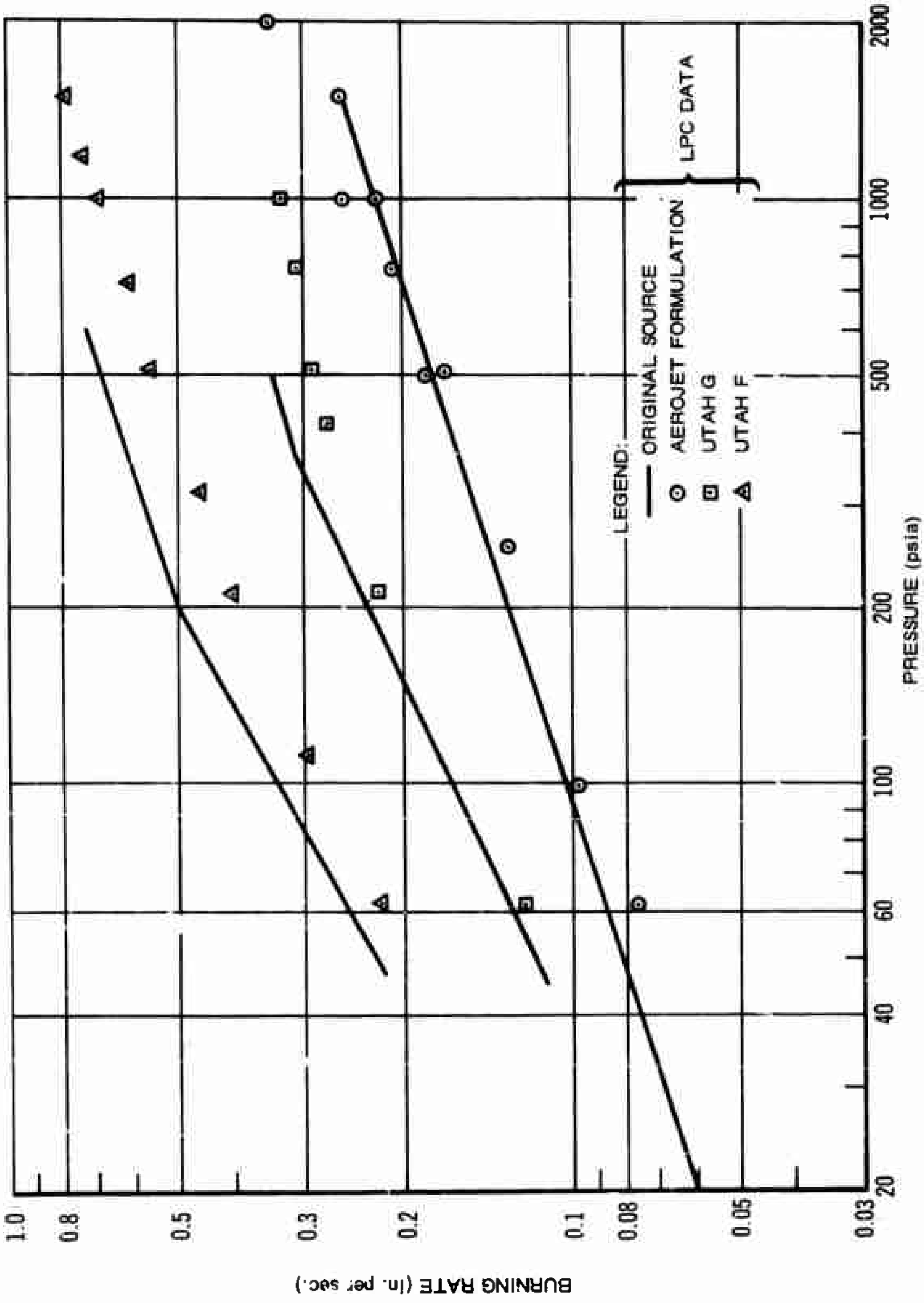

Figure 15 Burning Rate Characteristics of Rubber-Base Propellants

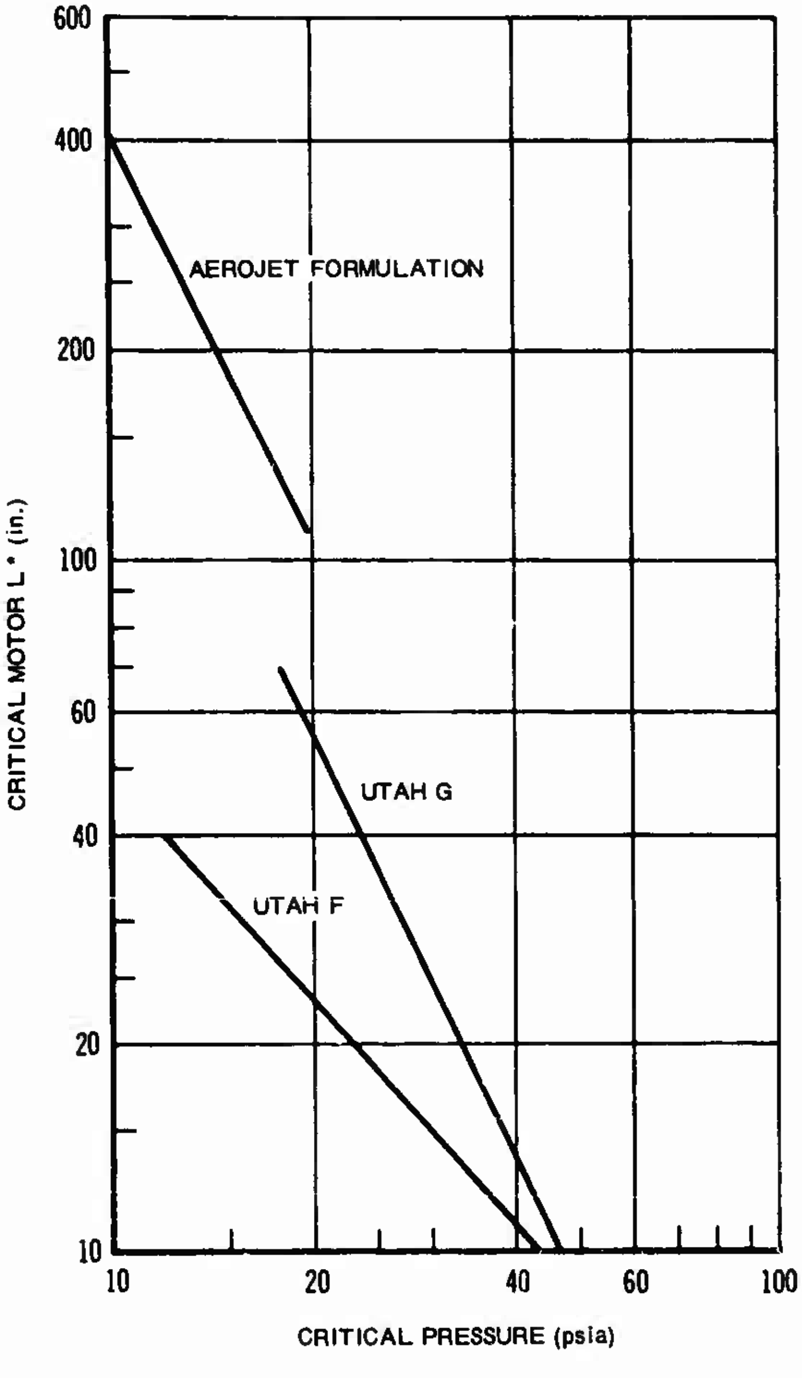

Figure 16 L* Instability Plots for Rubber-Base Propellants

which may not be too important, the Aerojet formulation can be construed as being of the same propellant type as the Utah formulations. Consequently, the Aerojet formulation is preferred at this time.

2. COMPOSITE-MODIFIED DOUBLE-BASE (CMDB) PROPELLANTS

a. Metalized CMDB Propellant

(C) As the composite propellants selected all use ammonium perchlorate (AP) as solid oxidizer, it would appear desirable from the standpoint of a controlled experiment that the selected CMDB propellant also use AP as the solid oxidizer. However, because of the controllable solid motor application that has provided the impetus for much of the propellant development involving transient ballistics studies, and the need for fairly high burn rate-pressure exponents in this application, the best-characterized CMDB propellants use cyclotetramethylenetetranitramine (HMX) as the solid ingredient. For the single chamber controllable solid application, a small amount of AP is mixed in to reduce the pressure exponent to a more tolerable level. The AP also serves to improve metal combustion efficiency. Consequently, as a well-characterized system (Refs. 36, 37), propellant LPC-1034 is selected for the initial testing. Its properties are provided in Table II, and in Figures 17 and 18. An AP-CMDB formulation can be among those propellants to be selected for study subsequently in the program.

b. Nonmetalized CMDB Propellant

(C) The nonmetalized analog of LPC-1034 is selected as representative of this category. Its properties are given in Table II, and Figures 17 and 18. It has not been as well characterized as LPC-1034, but other sources of transient combustion data for nonmetalized HMX-CMDB formulations were not found in the literature.

TABLE II

CMDB PROPELLANT FORMULATIONS

	LPC-1034	LPC-Formulation A24-45-3
Ball Powder B	14.0	15.3
Ball Powder C	1.0	1.0
TEGON	12.0	13.0
TMETN	20.0	21.7
Resorcinal	1.0	1.0
HMX (Class A)	40.0	38.0
AP (Type II, Size I)	4.0	10.0
Aluminum (Volley, H-S)	8.0	-
$\dot{P}$ EXTINGUISHMENT REQUIREMENTS		
	$\frac{d\ln p}{dt} = 10 \text{ sec}^{-1}$	$\frac{d\ln p}{dt} = 10 \text{ sec}^{-1}$

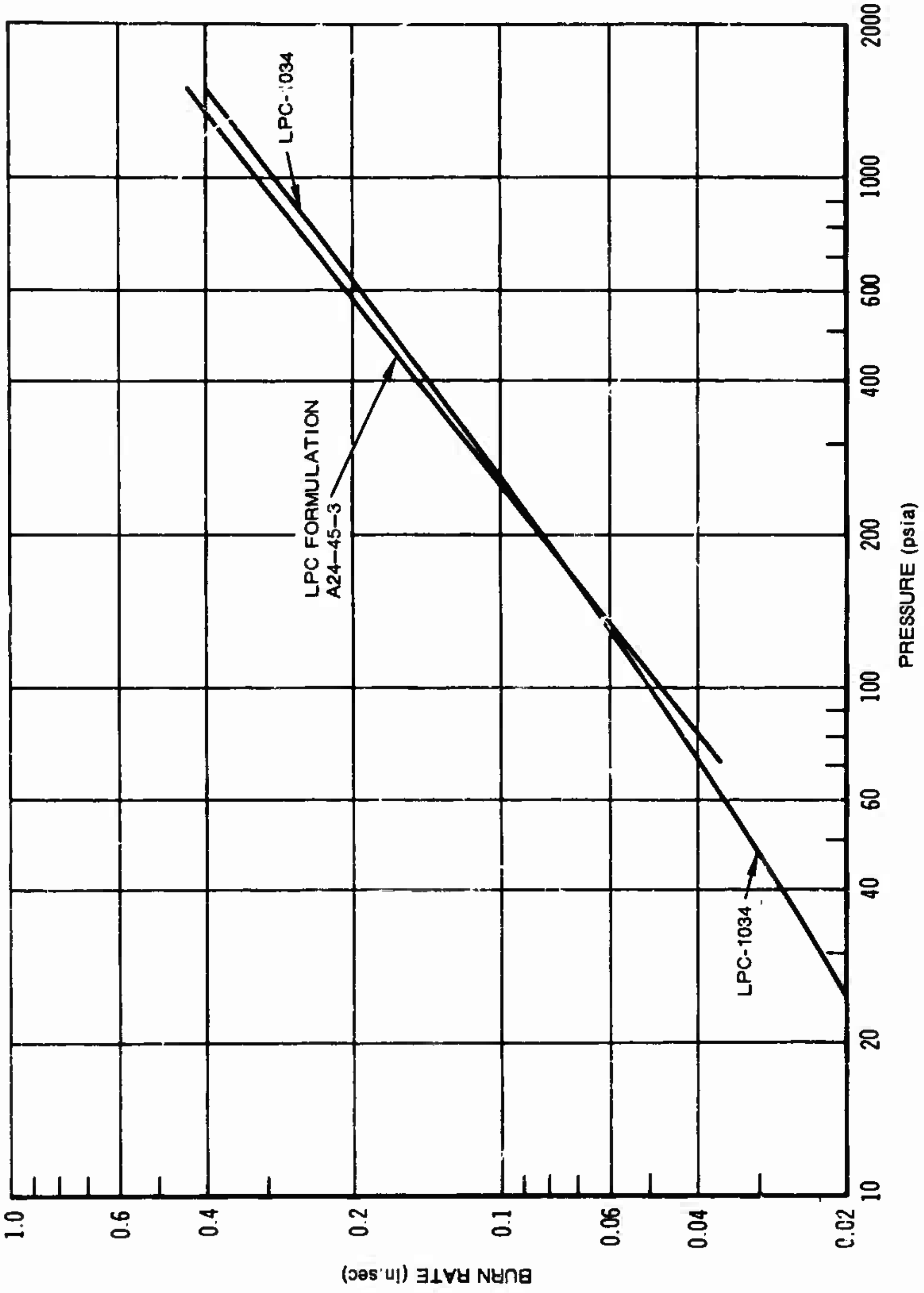

Figure 17 Burn Rate Characteristics of CMDB Propellants

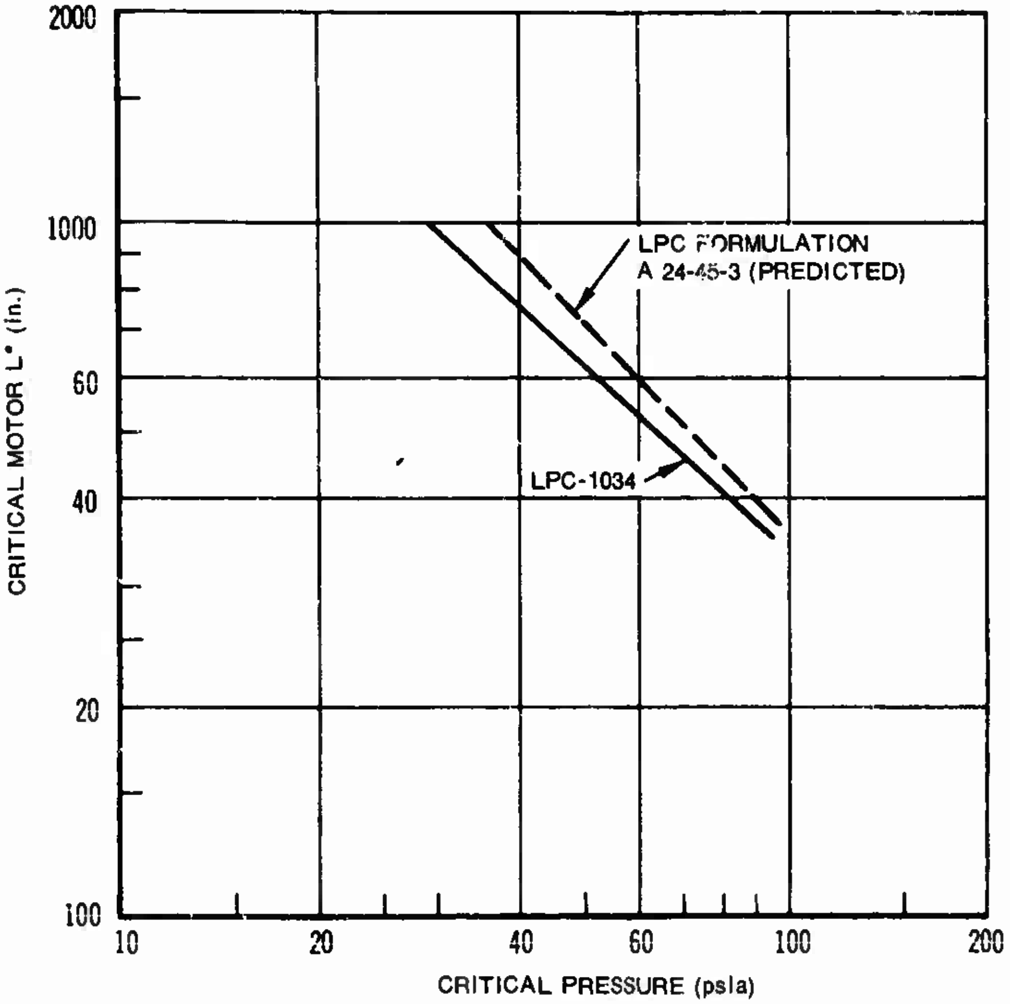

Figure 18 L* Instability Plots for CMDB Formulations

SECTION V

LITERATURE SURVEY

To present a complete assessment of the extent or state of available knowledge relative to solid propellant combustion processes, a thorough literature review is being conducted as part of this program. The review includes analytical and experimental work concerned with propellant ingredient combustion phenomena, (i.e., oxidizer decomposition and combustion, binder decomposition and combustion of oxidizer-containing binders, and metal combustion), as well as the combustion of aggregate propellants. The assimilation of these data will provide the maximum benefit from the work already performed, present a baseline and some guidelines for the current efforts, and serve as the initial stage of a continuing analysis that eventually will make use of the data obtained in the course of this program. The review begins with the state of combustion knowledge as of approximately 1950, and it traces developments to the present.

Various propellant ingredients and families are being studied, i.e. double-base, composite, and CMDB propellants, and various oxidizers, binders, and additives. In this fashion it is hoped to broaden or to seek areas of generality within existing hypotheses, and to evaluate more critically and/or more fruitfully tie together existing pieces of information that may have been generated at a particular time, for a particular type of propellant, within a particular range of data. Also, by reviewing experimental techniques that have been used in combustion research, it will be possible to confirm or amend the present approach with respect to particular observations and conditions needed to contribute most profitably to the project objective.

Several hundred publications were reviewed, and references were listed and grouped within a particular format conforming to the organization of the report established. The organization itself was somewhat of a problem because nearly a hundred topical items can be discerned from the information gathered. These topics can be grouped into classifications in various ways, yet they still require excessive cross-discussion. Presenting the material as a sequence of these items could be cumbersome, confusing, and much of the information likely would be out of contex, making it difficult to read. Consequently, considerable thought went into the organization of the material under the groundrules of palatability, logical sequencing, and the avoidance of repetition borne of topical interfaces. It is hoped thereby that the number of discussion pages will be minimized within the consideration that the extent of combustion research to date is truly overwhelming. A tentative outline is presented in Appendix II. The effort in the coming months will complete the tabulation, charting, analysis, and write-up of the information gathered. It is planned to submit the literature survey as a separate report three months hence.

Concerning the relationship between the literature survey and the experimental work to be performed on this program, nothing has been uncovered from the survey suggesting modification of the approach, considering that the combustion of solid propellants is to be studied in a motor environment. However, it does appear from the survey that a majority of useful data, both instrumental and visual, is more readily and conveniently obtained at low pressure. At the same time, comparatively simple combustion models are applicable at low pressure for convenient data use, e. g., computation of combustion kinetics, more accurate thermal profile measurement for determination of surface effects, better resolution of flame stand-off distance to correlate with gas phase processes, etc. Fundamental quantities so determined may well hold at higher pressures, with changes in behavior coming from the change in predominance of a particular factor or process for which a unique quantity has been established. Nevertheless, experiments will be performed over a wide range of pressure on this program, as warranted by particular information that is desired e. g., burning rate, heat transfer, completeness of metal combustion, flow characterization, and any instrumental and visual data for which adequate resolution can still be achieved.

A particular series of experiments to be performed on this program makes use of the finding that phenomena such as combustion instability, heretofore a motor development problem, can be tapped as a potentially useful combustion research tool. One problem of steady-combustion analysis is the inherent limitation of the steady-state process. Because of the number of processes governing burning rate and the burning rate-pressure relationship (in the solid phase, at the surface, and in the gas phase), the steady-state model is analogous to the use of one equation to solve for several unknowns. Research conducted in the area of transient combustion processes (mostly with respect to acoustic combustion instability and recently with respect to L* instability and extinguishability) has evolved to the point where the "additional equations" may now be available. Under transient conditions, and by varying the nature of the transient, surface kinetic effects and gas-phase kinetic effects are more easily isolated and determined. Of course, the analyses themselves are sophisticated because of the time-dependencies involved, but the results have been prepared in such a way that they can be applied to experimental measurement. It is by this approach that in-motor quantitative data as necessary for improved understanding of combustion may be obtained. Burning rate-temperature sensitivity, also considered as an undesirable ballistic property, appears to be another useful property from the standpoint of combustion research. Through proper interpretation of the mechanism by which the π_K effect is brought about, it appears possible to make straightforward estimates of surface temperature from

$$\pi_K \left(\text{or } \sigma_p = \frac{\partial r}{\partial T} \bigg|_p \right)$$

data. Similarly, the erosive burning properties of a propellant can provide at least a qualitative assessment of the relative importance of energy

SECTION VI

PRE-CHECK TESTING OF EXPERIMENTAL APPARATUS

1. OBJECTIVES OF THE PRE-CHECK TESTS

To employ the previously described experimental apparatus in both a reliable and efficient manner during the course of the program, a preliminary check of the procedure and operation of all the equipment associated with the experiments was deemed advisable. This phase of the program, termed pre-check tests, includes establishing exact procedures for mixing the five well characterized propellants and casting fine-wire thermocouples in the propellant slabs. In addition, the pre-check tests include checking the operation of the combustor, the pintle extractor, and the rotary valve to establish if the performance of these units conforms to their respective design criteria. The following is a summary of the results obtained from the pre-check tests and, where applicable, the modifications made to rectify limitations in the operation of the apparatus.

2. CHECK OF COMPOSITE PROPELLANT MIX PROCEDURE

a. Nonmetalized Ammonium Perchlorate - Rubber Base

The formulations for the Utah F and Utah G propellants were taken from Reference 3 and have been presented in Table I. To duplicate these propellants, an attempt was made to obtain the ingredients listed; however, it was found that the oxidizer grind of mean diameter equal to 15 microns as supplied by the American Potash and Chemical Corporation no longer was available. As a result, a coarse grind of oxidizer was obtained from that source and was ground to a mean diameter closely approximating that of the specified 15 micron grind. All other ingredients in the Utah propellant formulations are the same as those specified in Reference 3.

The burning rates of the Utah G and Utah F propellants as mixed at LPC are presented as a function of pressure in Figure 15, and are compared to the rates reported by Utah. It can be observed that the burning rates found are approximately 20 percent less than those reported by Utah. The reason for the lower burning rates could be a result of the different oxidizer grind distribution; as a result, the size of the fine grind of oxidizer will be reduced in future mixes to increase the burning rate and match the rates given in Reference 3.

b. Aluminized Ammonium Perchlorate - Rubber Base

The formulation for the Aerojet propellant (designated 64-1106) was taken from Reference 40. In attempting to obtain materials for this propellant, it was found that the cure catalyst and wetting agent, "Surfac OS," could not be obtained from Aerojet because it is a company proprietary ingredient. Attempts to mix the propellant without "Surfac OS" resulted in mixes with poor physical properties. As a result, the curing agent and plasticizer were replaced as shown in the listing of the formulation presented in Table I. The resulting propellant (designated Modified 64-1106) exhibited excellent physical properties and the burning rate (Figure 15) compared favorably with that of the data obtained from Reference 40.

3. CHECK OF COMPOSITE-MODIFIED DOUBLE-BASE (CMDB) PROPELLANT MIX PROCEDURE

a. Metalized CMDB Propellant

Since this propellant formulation was developed at LPC, the mixing procedure has been well established in the LPC mix facilities. Thus, the LPC-1034 propellant was deemed acceptable for the experiment.

b. Nonmetalized CMDB Propellant

As mentioned previously, this propellant is actually a nonmetalized analog of the LPC-1034 propellant. In early attempts (prior to this program) to establish a propellant of this type, the aluminum content of the propellant was replaced with the other ingredients ratioed upward in similar proportion. However, the slope of the burning rate was found to be excessive for single chamber controllable solid motors. As a result, a change was made in the relative proportion of the solid oxidizers. This change resulted in the formulation listed in Table II. The burning rate characteristics shown in Figure 17 are felt to be satisfactory for the nonmetalized CMDB propellant.

4. TECHNIQUE OF CASTING PROPELLANT SLABS

The use of fine-wire thermocouples to measure the thermal wave within the propellant and the burning rate of the propellant poses three difficult problems when the technique of casting the propellant slabs is considered. First, to measure the thermal wave in the solid phase, a thermocouple junction must be constructed which is considerably smaller than the thickness of the thermal wave. Second, once the thermocouple is cast in the propellant, no voids in the propellant can be tolerated close to the thermocouple junction. Third, for the thermocouple output to be utilized to measure burning rate, the thermocouple junction must be located accurately with respect to the propellant surface.

To overcome the first problem mentioned, HY-CAL Engineering was contracted to make thermocouples from very fine chromel/alumel wire (0.0003 inch diameter). A photomicrograph of the fine-wire thermocouple as manufactured by HY-CAL Engineering is presented in Figure 19. The fine wires are joined in such a manner that essentially no thermocouple bead is visible and no wires protrude from the junction point. The resulting thermocouple will allow the measurement of temperatures over a region of approximately 7 microns, which is within 10 percent of the thermal wave thickness in the solid for pressures ranging from 50 psi for the Utah F to 250 psi for LPC-1034.

The technique of mounting the fine-wire thermocouples in the propellant slabs can be divided into two parts: (1) casting the thermocouple in a

Figure 19 Photomicrograph of Fine-Wire Thermocouple

propellant pill, and (2) casting the propellant pill, which contains the thermocouple, into a slab of propellant. In the following discussion, a brief explanation of the techniques developed is presented. These techniques were developed to circumvent the second and third problems mentioned previously.

a. Casting Propellant Pills Containing Thermocouples

The mold in which the propellant pills are cast is shown in Figure 20. The mold has the capability of casting twenty propellant pills with a thermocouple mounted in each pill. The procedure followed in fabricating a pill consists in vacuum casting propellant into one of the shallow depressions in the mold and laying a thermocouple above the surface of the propellant in the manner depicted in Figure 20. The thermocouple junction is located accurately with respect to one of the pill surfaces and propellant is added until the thermocouple junction is submerged in the uncured propellant. A photograph of a propellant pill containing a thermocouple is presented in Figure 21.

To establish that the thermocouple junction is not surrounded by voids in the propellant and that the thermocouple wire location remains fixed after the propellant cures, X-ray photographs were taken of a thermocouple embedded in a pill of Aerojet (Modified 64-1106) propellant and a pill of Utah G propellant. Although it was difficult to resolve the fine-wire thermocouple in the X-ray, it was possible to conclude that the fine-wire thermocouple had not shifted during the time the propellant cured and that no voids were present in the pill about the thermocouple junction.

The precise technique employed in casting the propellant pill and mounting the thermocouple has been documented in a Standard Operating Procedure (SOP 835-1). The SOP was written with the intent that the technician use the SOP at the time he is fabricating the propellant pills. A copy of this SOP is included in Appendix I of this report.

b. Casting the Propellant Pill in a Propellant Slab

The technique of casting the propellant pill containing a thermocouple into a propellant slab involves mounting the propellant pill in the propellant slab mold and vacuum casting propellant around the pill. The propellant slab mold is shown in Figure 22 and is capable of casting twenty propellant slabs, of which ten can be fitted with propellant pills containing thermocouples. The procedure for this casting operation was outlined in detail in a second Standard Operating Procedure (SOP 835-2) which is used by the technician when fabricating the propellant slabs. A copy of that SOP is included in Appendix I of this report.

Figure 23 shows a propellant slab that has a propellant pill mounted within the slab. The propellant is cast against a back-up plate serving to mount the propellant slab in the combustor. The thermocouple sheath passes through holes drilled through the back-up plate.

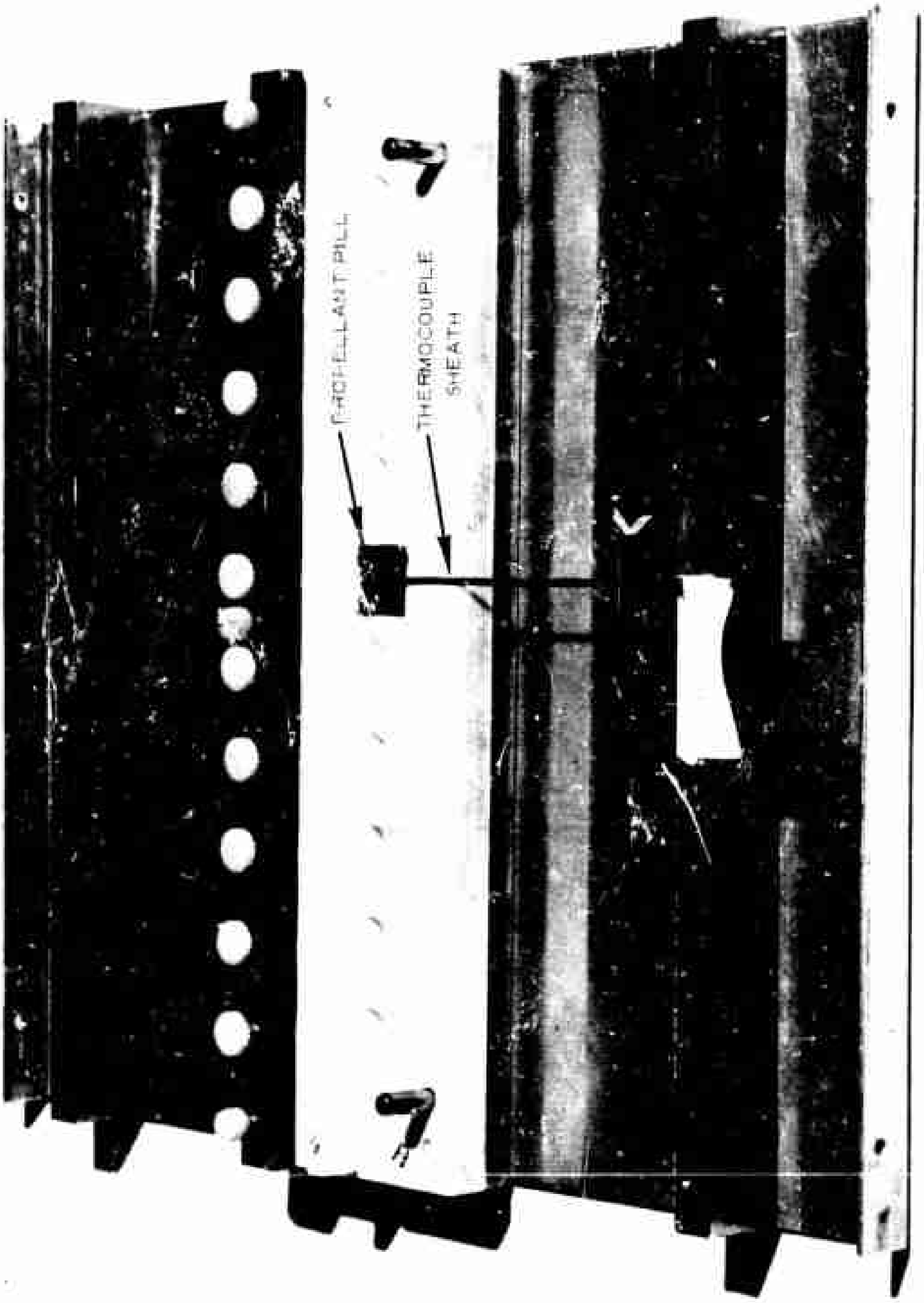

Figure 20 Propellant Pill Mold with a Propellant Pill Containing a Thermocouple

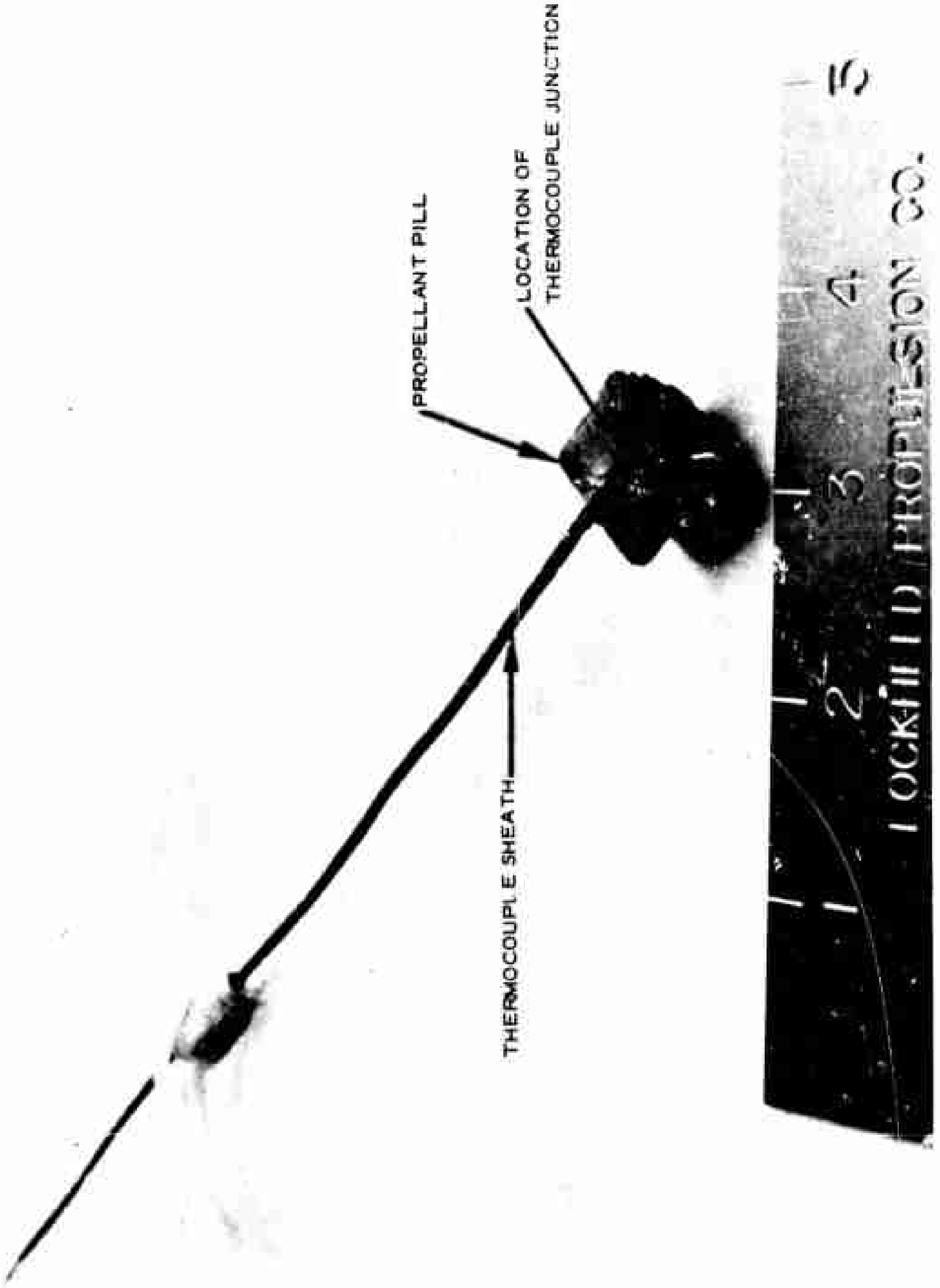

Figure 21 Propellant Pill Containing a Thermocouple

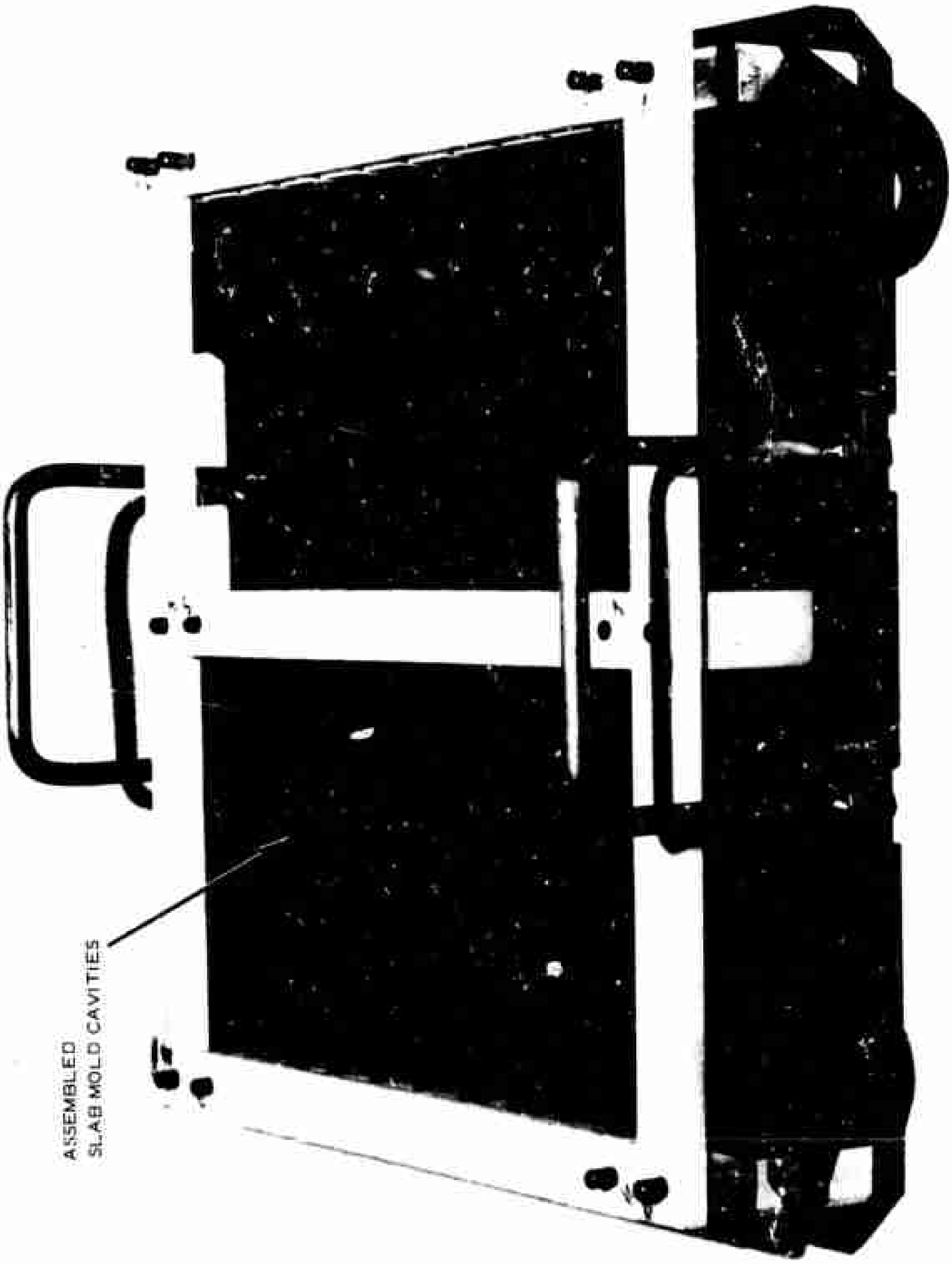

Figure 22 Propellant Slab Mold

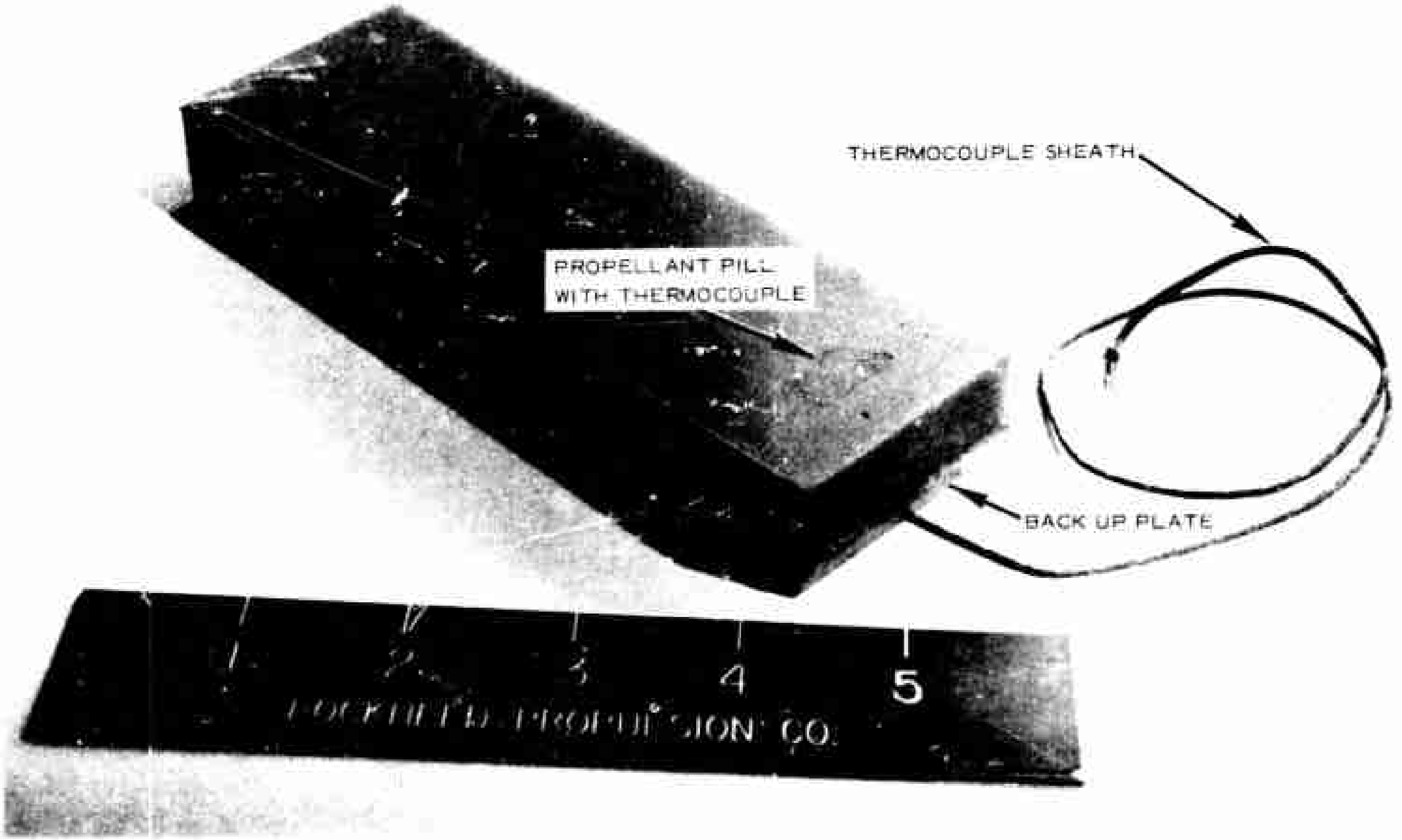

Figure 23 Propellant Slab with Propellant Pill Containing a Thermocouple

The techniques developed for fabricating the complete propellant slab have been employed in casting slabs of propellant for each of the five well characterized propellants. The most severe problem encountered in the fabrication procedure was establishing a uniform flow of uncured propellant around the propellant pill so that voids are not present in the slab corners. This problem was particularly severe with the Utah propellants because of their very high viscosity. However, an acceptable solution to the problem has been found by vacuum casting the propellant into the slab mold and vibrating the mold thus promoting propellant flow around the propellant pills. The pill is readily seen in Figure 23 because of its slight surface roughness.

5. TESTING OF THE COMBUSTOR AND ASSOCIATED EQUIPMENT

a. The Test Cell, Combustor, and Vacuum Tank

Before testing the combustor in the test cell, a pressure test was made of the combustor and the vacuum tank. The combustor was tested hydrostatically to a pressure of 1500 psi and cycled back to atmospheric pressure several times. No leaks were observed along the sealing surfaces of the combustor during the periods of high pressure and no structural limitations were noted in the design.

To test the vacuum sealing capabilities of the vacuum tank, the vacuum pump was employed to evacuate the tank to a vacuum of 28 inches of Hg. After disengaging the vacuum pump and waiting for a period of three hours, it was found that the pressure in the tank had increased to only 27 inches of Hg. Thus, it was concluded that both the combustor and vacuum tank were sufficiently leakproof and that their structural designs were satisfactory for the pressure range of interest in the experimental program.

b. The Combustor Performance

The firings of the combustor in the pre-check test series conducted to date have used only single slabs of propellant. In these tests, the attempt was made to check the operation procedures to be followed in order to operate the combustor successfully. In addition, critical settings (such as purge flow rate, camera aperture settings, etc.) were examined to obtain data in a reliable manner during the first phase of experiments concerned with the five well characterized propellants. Also, the pre-check experiments yielded information indicating the type of igniter that should be used in the combustor and the type of material necessary to insulate the combustor walls. The following is a summary of results obtained from two pre-check motor firings.

The first pre-check firings were made with single slabs of Aerojet propellant (modified 64-1106) located in the lower slab position of the combustor and inhibited with a thin layer (0.010 inch) of epoxy. The upper slab position was occupied by an insulated back-up plate that reduced the heat loss over that area. The insulation used on the combustor walls and on the upper back-up plate was a GE silicone compound (RTV-88). This insulating material was of an ablative type intended to be capable of withstanding at least two firings in the combustor before replacement became necessary.

The flow rate of the window purge was regulated in such a manner that at equilibrium chamber pressure choked flow existed at the purge entrance slot located between the window surface and the combustor surface. The igniter was a bag type containing a type 103 Atlas match surrounded by a 100 mg layer of B-KNO_3 powder (30 mesh) and eleven B-KNO_3 pellets (type 20). A high-speed motion picture was made with a Fastax camera which was focused through one of the purged windows on the edge of the propellant slab. The speed of the camera was approximately 2000 frames per second and the f stop was f/16.

The results of the first test showed inhibitor failure attributed to insufficient inhibitor on the slab sides. Proof of the inhibitor failure was derived from the combustor interior ballistics and the burn pattern created on the back-up plate as the propellant slab completed burning.

The nitrogen purge did not maintain the window sufficiently clean for satisfactory filming of the combustion process within the combustor. One possible explanation for the clouding of the window was the existence of a jet pump effect from the window purge tending to draw combustion products from the combustor and into the purge flow. Once entrained in the purge flow, the products coated the inside surface of the viewing window.

An observation from the first test was that the wall insulation was satisfactory for only a single test. It was noted that a layer of insulation still remained on the wall after the test. However, the thickness of that layer was insufficient to insulate the combustor for a second test.

To rectify the problems delineated, several changes were made to the combustor and additional firings were performed to check operation of the modified combustor. The single slab of Aerojet propellant was used in the same orientation as described in the first test. However, the epoxy slab inhibitor was replaced with a silicone coating of RTV-88. As a result of clearance limitations between the slab sides and motor wall, the thickness of the inhibitor was again only 0.010 inch. The technique of purging the viewing window was modified such that the velocity of the purge was not sonic across the window surface. The Fastax camera still was mounted and focused on the edge of the propellant slab.

The results showed that the equilibrium chamber pressure was 40 percent greater than the design equilibrium pressure. A rough check of the pattern burned on the back-up plate showed that the inhibitor had failed, yielding approximately a 40-percent increase in burning area. Thus, it was concluded that the inhibitor thickness was not sufficient for these tests.

The window purge again proved to be entirely unsatisfactory. The films showed that the window surface was clouded during ignition and remained clouded through the entire period of burning. Also the $^1/_8$-inch thick Vycor window protecting the quartz window fractured at the end of one firing. As a result, it was deemed necessary to redesign the sidewalls of the combustor and obtain a cleaner ignition source.

The new design of the sidewall plates incorporated modifications which were based upon the problem of window clouding and wall insulation. In the new design, the window was recessed one inch from the propellant surface as opposed to the ½-inch recess existing in the former window design. For additional window surface protection, provision was made for an aperture plate between the window and propellant surface which, if necessary, would reduce the area over which the combustion gases can become entrained with the nitrogen purge. A method of insulating the sidewall with a replaceable ⅛-inch phenolic sheet was incorporated in this design to eliminate the problem of recoating the walls with an insulation material. The phenolic sheet will be recessed in the new design to allow additional clearance between the propellant slab and the motor wall. Thus, the capability of a thick inhibitor (⅛-inch) along the propellant slab will be possible. The new design has been completed and the modified sidewalls are presently being fabricated.

The B-KNO_3 bag igniter was suspected of contributing to the window clouding problem because of the large amount of solid products in the combustion products. As a result, the ignition source will be replaced in future test firings with a ball powder bag igniter yielding less solid particles in its combustion products. In that igniter, approximately one gram of ball powder (depending on the motor L*) is contained in a bag and an Atlas match (type m-100) is used to ignite the ball powder.

c. The Rotary Valve

The function of the rotary valve is to supply a sinusoidal inert gas flow into the head-end of the combustor for the purpose of motor-derived combustion kinetics.

A pre-check test of the rotary valve assembly has been completed. The rotary valve was driven by the hydraulic pump as described in subsection III 3.c.of this report and the valve operation was checked for defects in design and workmanship. The rotary valve was mounted on the fore end of the combustor as shown in Figure 12 in Section III and nitrogen was applied to the valve input at a pressure of 50 psi. The nitrogen passed through the valve, into the combustor wall passage, and out of this passage into the combustor chamber. No propellant was burned and the combustor nozzle was removed to allow complete chamber venting. The pressure was monitored at a point within the combustor passage and the speed of the valve shaft was determined from the output of a rigidly mounted coil that detected the passing of a small magnet fixed to the periphery of the rotating valve shaft.

The results demonstrated that the rotary valve is capable of operating at shaft speeds up to 6000 rpm resulting in a 1000 cps upper limit on the siren frequency which is an acceptable upper limit for the instability experiments. A typical output of the pressure transducer and coil pick-up is presented in Figure 24 for a shaft rotation of 300 rpm. The resulting pressure fluctuations are at a frequency of 50 cps.

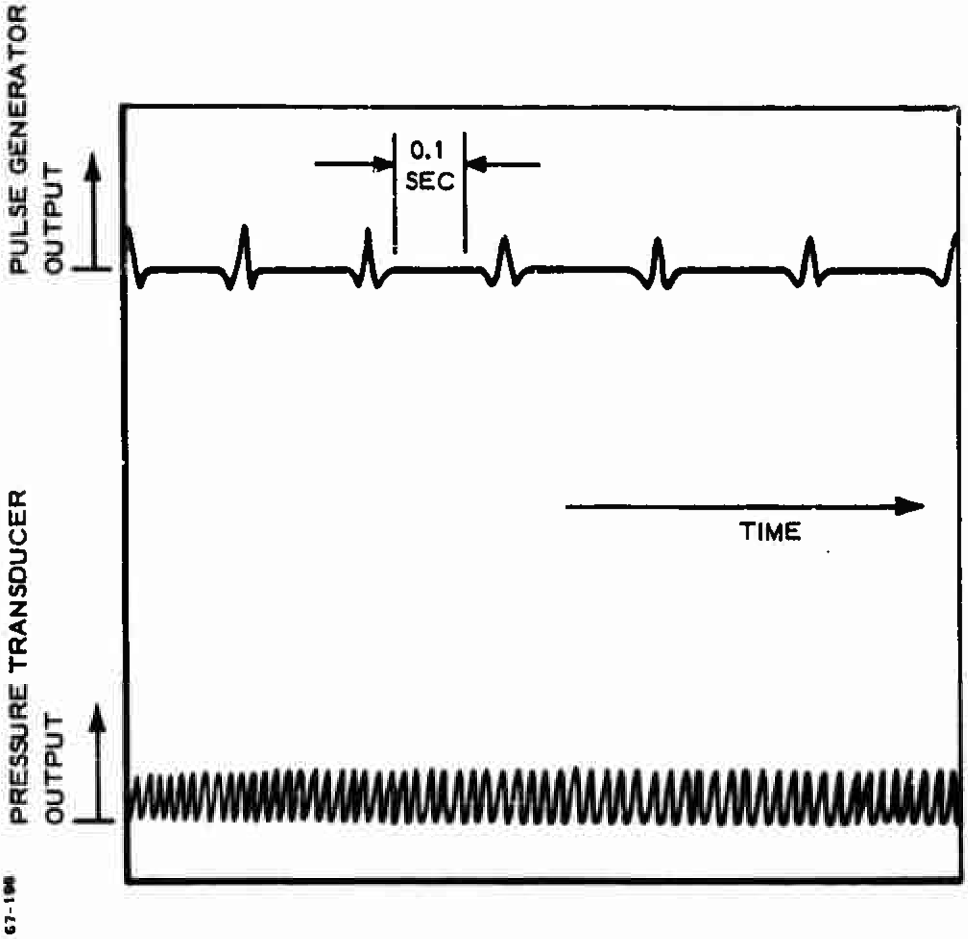

Figure 24 Rotary Valve Frequency and Pressure Pulses Passed by the Rotary Valve

Some frequency modulation was detected, probably due to the close tolerances to which the valve was constructed and the fact that the bearings have not been completely worn smooth. To correct this problem, the rotary valve will be run with no gas passing through the valve for a period necessary to smooth the bearings.

d. The Pintle Apparatus

The pintle extraction apparatus will be employed to initiate L* and rapid depressurization extinguishment by the movement of a graduated pintle inserted and slowly or rapidly withdrawn through the aft end of the combustor nozzle.

The pintle extraction apparatus has been tested to determine the feasibility of its operation in a pneumatic mode. To obtain this information, the extractor was not mounted in the test cell as described in subsection III 3.c. of this report. Instead, the apparatus was installed in a manner in which rapid installation and easy access to all important connecting points was possible. As a result, the extractor was not mounted suitably for a full pressure (2200 psi) rapid extraction test in the double-ended cylinder. A maximum pressure of 400 psi was relied upon instead for the information desired in pre-check tests.

Both sides of the double-ended cylinder were pressurized initially to 400 psi. The end of the cylinder toward which the piston was to move was blocked by a solenoid valve and the other side was connected to a 400 psi nitrogen supply. The movement of the piston was initiated by opening the solenoid valve that allowed one side of the double-ended cylinder to vent, thereby creating a force on the piston dictated by the pressure differential on the two piston forces. The linear position of the pintle was monitored along with the time of switch activation on an oscillograph. A typical output is presented in Figure 25 in which the time interval from switch activation to start of pintle movement is shown to be about 38 msec. The time elapsed from the time of first pintle movement to pintle movement equal to the entire stroke (1.8 inches) is approximately 20 msec, so that the nozzle area charge is accomplished in 5 msec. It is obvious that the longer time delay is a result of solenoid valve delay instead of the pintle velocity. As a result, if the thermocouple output is to trigger the pintle extractor as described in subsection III 3.c. the need of an explosive latch actuator is required.

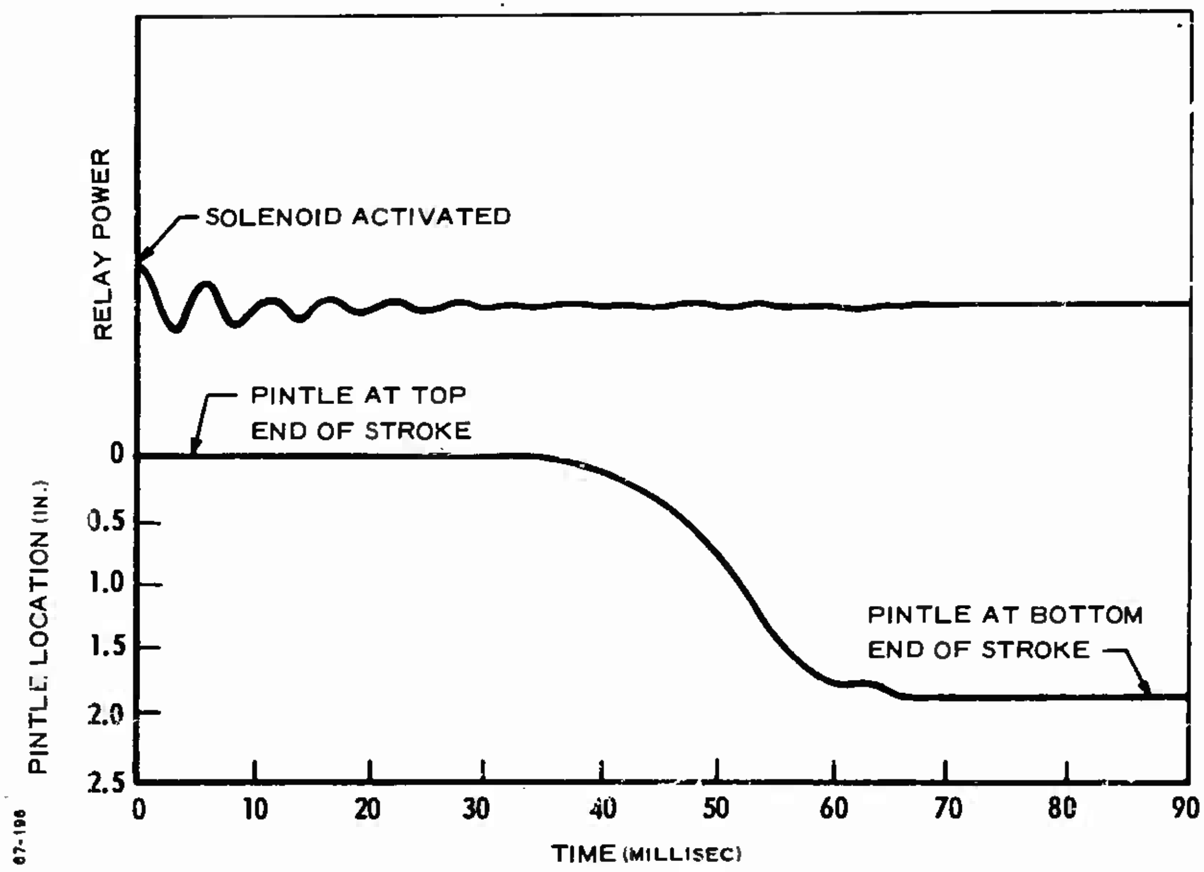

Figure 25 Time Elapsed during Pintle Extraction Test

SECTION VII

PLANS FOR THE NEXT PHASE

Pre-check tests of the combustor operation will be completed in the next phase. In these final tests, double propellant slabs will be fired in the chamber and the operation of the calorimeter, radiometer, and photo cell will be checked. Also, a thermocouple will be mounted in one of the propellant slabs so that the circuitry for the thermocouple can be checked for response and noise levels during a motor firing. It probably will not be possible to conduct all of these tests with the new combustor sidewall design; however, the information pertaining to instrumentation response will not be impaired by employing the present sidewalls in those tests. When the new sidewalls are available, it will be necessary to conduct at least one test to check out the window purge and the wall insulation techniques.

Upon completion of the pre-check tests, it is planned to proceed to Task 3 of the program in which the ballistics, instability, and extinguishment properties of the five well characterized propellants will be established. With the experience gained from the pre-check tests, it is planned to make two or three firings per day in the combustor. Schedules for propellant processing have been established and the fabrication of propellant pills and propellant slabs at a rate amenable to the test schedule will be initiated when the pre-check tests are complete.

(The reverse is blank)

APPENDIX I

PROCEDURE FOR CASTING PROPELLANT PILLS AND SLABS

1.0 STANDARD OPERATING PROCEDURE 835 NO. 1 -- MOUNTING FINE-WIRE THERMOCOUPLES IN PROPELLANT PILLS

1.1 Equipment Required

(1) Thermocouple pill casting bed assembly
  (a) Movable depth indicator
  (b) Ten knurled locking screws
  (c) Six slotted locking screws
  (d) Two thermocouple clamping plates
  (e) One Teflon slide rail
  (f) One curing oven lid
  (g) One casting bed
(2) Swing-arm 3-D microscope
(3) 500-gram mixer
(4) Vacuum casting equipment
(5) Fine-wire thermocouples as specified on laboratory work request
(6) Hypodermic needle
(7) Masking tape
(8) Flat-end spatula
(9) Screwdriver

1.2 Procedure

(1) Prepare thermocouple pill casting bed for casting.

(a) Remove curing oven lid from casting bed.

(b) Unscrew the six slotted locking screws from casting bed.

(c) Remove the two thermocouple clamping strips from casting bed.

(d) Remove movable depth indicator from Teflon slide rail.

(e) Cover all locating pins and holes with masking tape.

(2) Prepare HYCAL fine-wire thermocouples for installation.

NOTE: The junction of the HYCAL fine-wire thermocouple is fabricated of 0.0003 inch wire. Each thermocouple costs approximately $50. Handle thermocouples with extreme care.

(a) Place the wood housing in which each thermocouple is stored on the table such that the mounting slot is facing up.

(b) Carefully remove packing material from each slot for removal of thermocouple.

(c) Remove one thermocouple from its wood housing and cut to an overall length of 5¾ inches.

NOTE: Do not cut off junction end of thermocouple.

(d) Observe thermocouple junction under the microscope.

(e) If the fine thermocouple wires are bent, note orientation of thermocouple junction.

(f) Replace thermocouple in the wood housing so that junction is facing up.

(g) Repeat steps 2c through 2f for remaining thermocouples.

(3) Mix a 600-gram batch of the specified propellant.

(4) Vacuum cast propellant into the thermocouple pill casting bed.

(5) Cast remainder of the propellant into a ⅓-quart milk carton for burning rate strands.

(6) Remove excess propellant from casting bed with flat-end spatula and smooth top layer of each pill.

(7) Remove all masking tape from casting bed.

(8) Position microscope and casting bed such so the microscope can be moved for viewing each propellant pill location.

(9) Position each thermocouple over a propellant pill.

(a) Place one thermocouple on casting bed and support block so that the junction is over the propellant pill and the cut end lies on the support block. Also, if the junction wires were found to be bent in step 2e, position the thermocouple so that the junction points away from the propellant pill (that is, ... up).

(b) Align thermocouple sheath on the scribe found on the vertical face of the casting bed and position the thermocouple so that the end of the thermocouple sheath is even with the edge of the propellant pill. (Figure 26)

(c) Fix the thermocouple sheath to the support rail with a piece of masking tape.

(d) Repeat steps 9a through 9c for remaining thermocouples.

(10) Inspect the two thermocouples clamping plates and check that each knurled locking screw is positioned so that the screw's tip is not protruding into the thermocouple slot. (Figure 27)

(11) Position one of the thermocouple clamping plates over its locating pins and insert the three slotted locking screws in their respective holes.

NOTE: Make certain that each thermocouple sheath is in its respective slot.

(12) Tighten the three slotted locking screws.

(13) Repeat steps 12 and 13 for the second thermocouple clamping plate.

(14) Clean any excess propellant from the slide rail.

(15) Place the movable depth indicator over the Teflon slide rail.

(16) Position the movable depth indicator over a propellant pill as shown in Figure 27.

(17) Position the microscope over the same pill and focus the microscope on the leading edge of the movable depth indicator and the thermocouple junction.

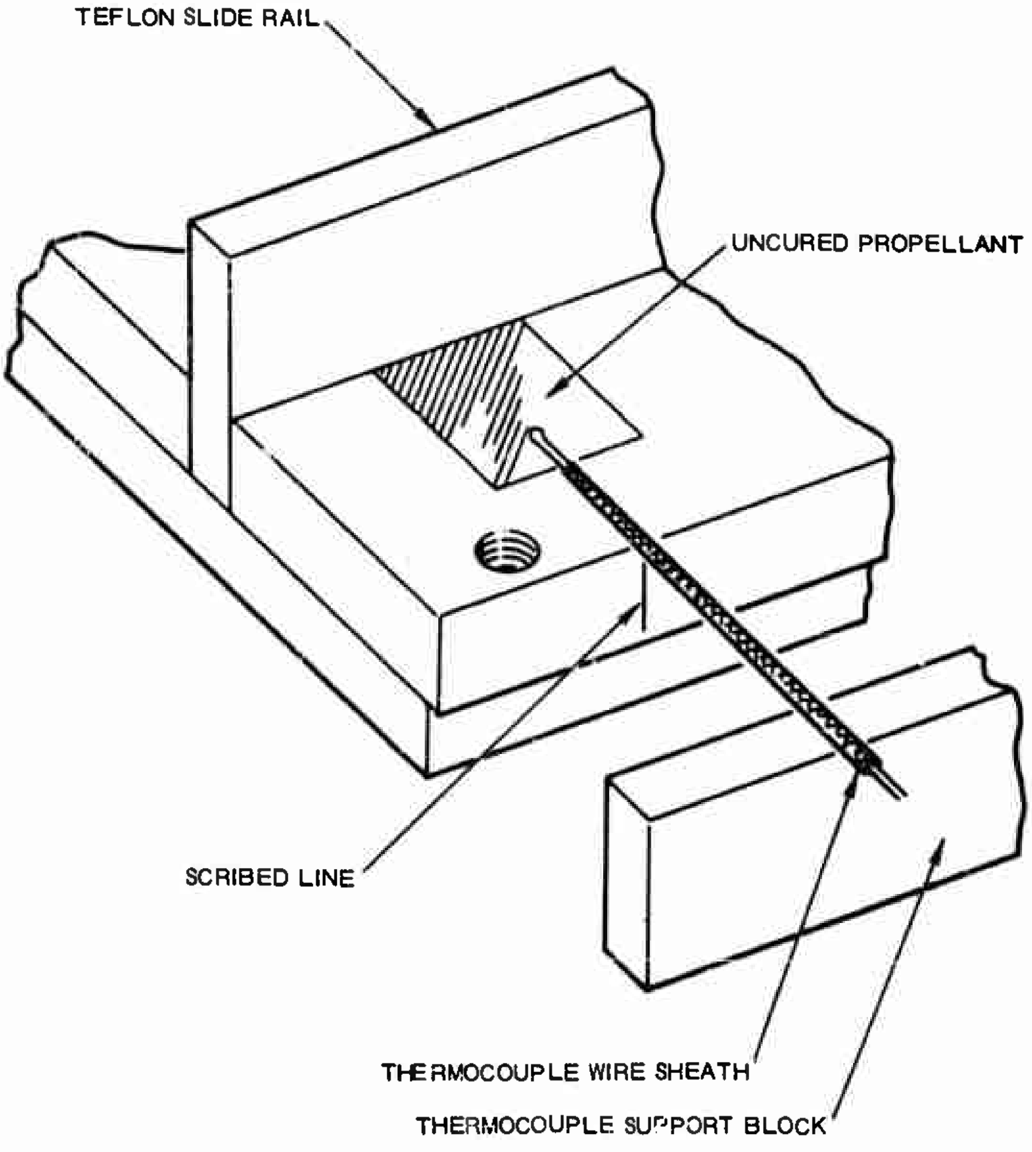

Figure 26 Initial Placement of Thermocouple Wire

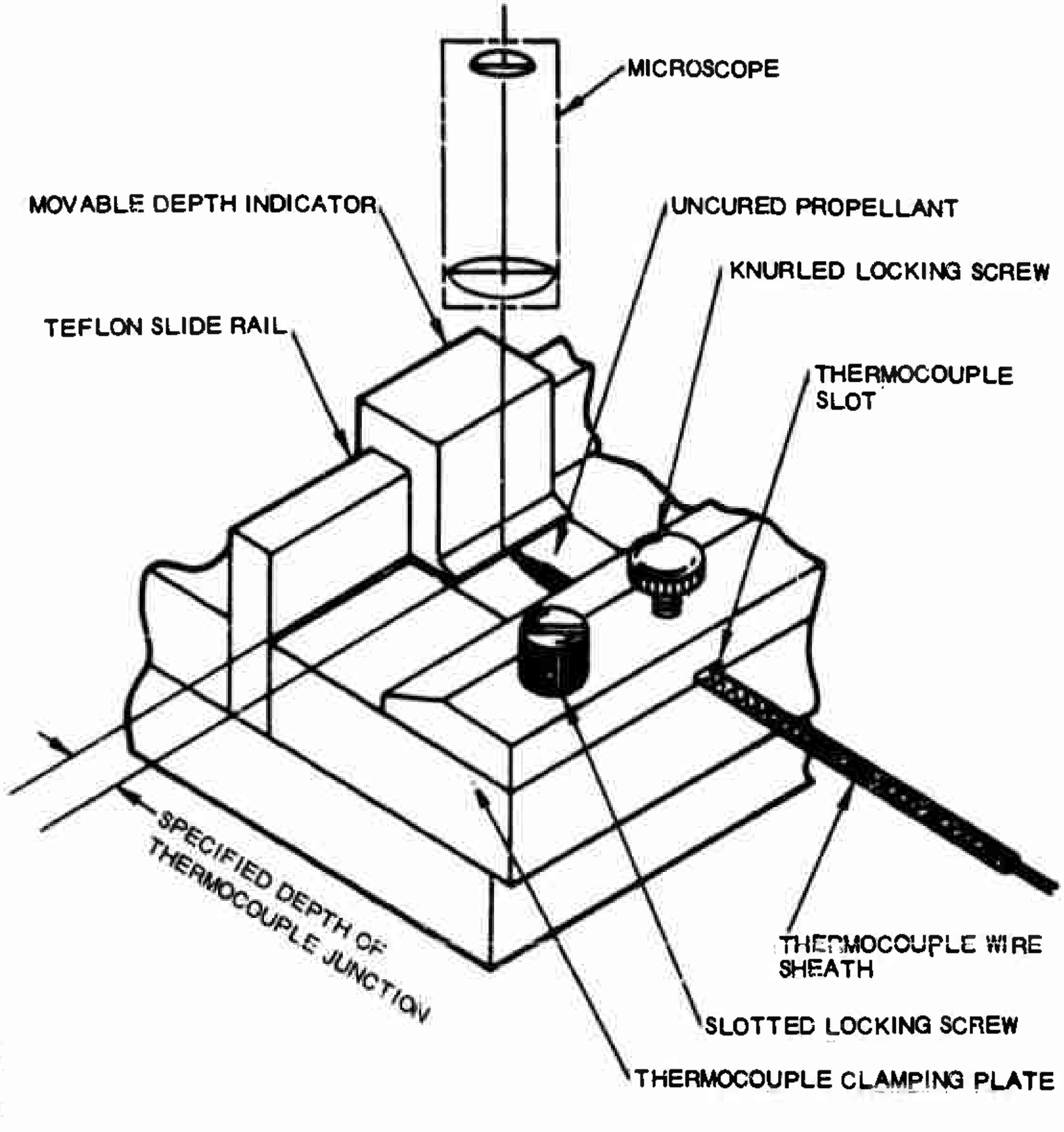

Figure 27 Location of Thermocouple Junction in Propellant Pill Mold

(18) Tighten the corresponding knurled locking screw until the thermocouple is held only loosely.

(19) While viewing through the microscope and grasping the thermocouple sheath, move the thermocouple junction toward the leading edge of the movable depth indicator until the thermocouple junction touches the leading edge.

(20) While viewing through the microscope and grasping the thermocouple sheath, move the thermocouple junction away from the leading edge until the junction rests one junction diameter from the leading edge.

(21) While viewing through the microscope, tighten the knurled locking screw, making certain the thermocouple junction does not move from the position described in step 20.

(22) If junction does move, adjust the sheath position and repeat steps 18 through 20.

(23) Move the microscope to observe the propellant pill on the other side of the Teflon slide rail (the pill having the other side of the movable depth indicator in position).

(24) Repeat steps 17 through 22.

(25) Re-check all critical distances with depth indicator.

(26) Remove the movable depth indicator from the Teflon slide rail.

(27) Submerge the fine-wire thermocouple junction.

- (a) Adjust the microscope so that the thermocouple junction is centered in the microscope field of view.
- (b) While viewing through the microscope, add small amounts of propellant to the pill mold so that the propellant level rises and flows around the large thermocouple wires. (Use the hypodermic for this operation.)
- (c) When the level of propellant is such that the large thermocouple wires are submerged, carefully push the fine thermocouple wire junction under the propellant surface.

NOTE: Do not bend the wires away from the center of the microscope field of view. If this is done, the junction will not be at the desired position. This step is critical and must be done with extreme care.

(d) When the junction is submerged in the propellant, place an additional portion of propellant over its location.

NOTE: Do not create voids in the propellant over the thermocouple junction.

(28) Repeat steps 16 through 28 for the remaining thermocouples.

NOTE: Do not jar wires when transferring casting bed to curing oven container.

(29) Place the curing oven lid over the casting bed and tighten the locking thumb screws.

(30) Place curing oven container in curing oven for the specified time period.

(31) Place burning rate sample in curing oven for the specified time period.

(32) Remove curing oven container from curing oven.

(33) Remove propellant pills from the casting bed.

(a) Remove the curing oven cover from the casting bed.

(b) Loosen each of the knurled lock screws holding the thermocouple sheath in place.

(c) Remove the six slotted lock screws holding the thermocouple clamping plates in place.

(d) Remove both thermocouple clamping plates.

(e) Insert a screwdriver blade under the edge of the Teflon slide rail and pry rail up and off casting bed.

(f) Remove the pills that do not contain thermocouples by freeing the bottom (rounded) surface of the pill first.

(g) Remove each of the pills containing a thermocouple in the same manner.

NOTE: Do not exert force on the thermocouple sheath when freeing pill. Lift the pill upward from the mold so that the sheath does not exert a force on the propellant pill mold surface.

(h) Place the propellant pills with thermocouples on the table so that the weight of the thermocouple sheath is supported by the table (rounded side up).

(34) Examine the propellant pills for voids.

(35) If voids are evident, trim the propellant from the edge of the voids to reduce surface discontinuities. (Do not trim from critical dimension surface.)

NOTE: Do not cut propellant from the region of the thermocouple junction. If this appears necessary, telephone R. Derr (Ext. 3289) for advice.

(36) If requested on the laboratory work request, store pills in the magazine assigned to MPO-835.

2.0 STANDARD OPERATING PROCEDURE 835 No. 2 -- CASTING PROPELLANT PILLS IN THE PROPELLANT SLAB CASTING BED

2.1 Equipment Required

(1) Propellant casting bed assembly

  (a) One base plate

  (b) Two aluminum side plates with clamps (S/Ns 5 and 7)

  (c) Two Teflon-notched guide plates (S/Ns 2 and 3)

  (d) Two three-hole Teflon strips (S/Ns 1, 7, 8, and 4, 56)

  (e) Three two-hole Teflon strips (S/Ns 4, 8, 5, 7, and 9, 2)

  (f) Back-up plates for each slab to be cast (see laboratory work request)

  (g) One divider plate alignment tool (S/N 10)

  (h) Teflon-coated divider plates with and without channels as required according to Standard Operating Procedure instructions.

(2) Propellant pills (see laboratory work request)

(3) 5000-gram mixer

(4) Vacuum casting equipment with shaker table

(5) Laboratory bench vise

(6) Long-nosed pliers

(7) Non-sparking knife

(8) Masking tape

2.2 Procedure

(1) Place casting assembly base plate on the work table.

(2) Prepare a steel back-up plate for mounting a propellant pill containing a thermocouple.

(a) Identify a steel back-up plate with two ¼-inch diameter holes drilled through the plate. Note that one side of the plate has four drilled and tapped holes, while the other side has a milled depression centered on each of the ¼-inch diameter holes.

(b) Lock the back-up plate in the laboratory vise as shown in Figure 28.

(3) Prepare a propellant pill containing a thermocouple for mounting in the back-up plate.

(a) Grasp the sheath of the thermocouple with the long-nosed pliers adjacent to the propellant surface as shown in Figure 29.

(b) Bend the sheath of the thermocouple sheath such that the sheath makes a 90° angle with the flat portion of the propellant pill as shown in Figure 29.

NOTE: Do not rely upon the propellant surrounding the thermocouple junction to support the thermocouple sheath during bending.

(4) Mount the propellant pill containing the thermocouple in the back-up plate.

(a) Carefully insert the thermocouple sheath through one of the ¼-inch diameter holes (on the milled depression side) until the propellant pill base is in contact with the back-up plate. (Figure 28)

(b) Center the sheath on the back side of the back-up plate and tape sheath in this position with a strip of masking tape. (Cover the complete length of the sheath.)

NOTE: Do not create forces on the thermocouple junction. If necessary, remove the pill and bend the sheath for a pill placement yielding minimum forces on the thermocouple wire.

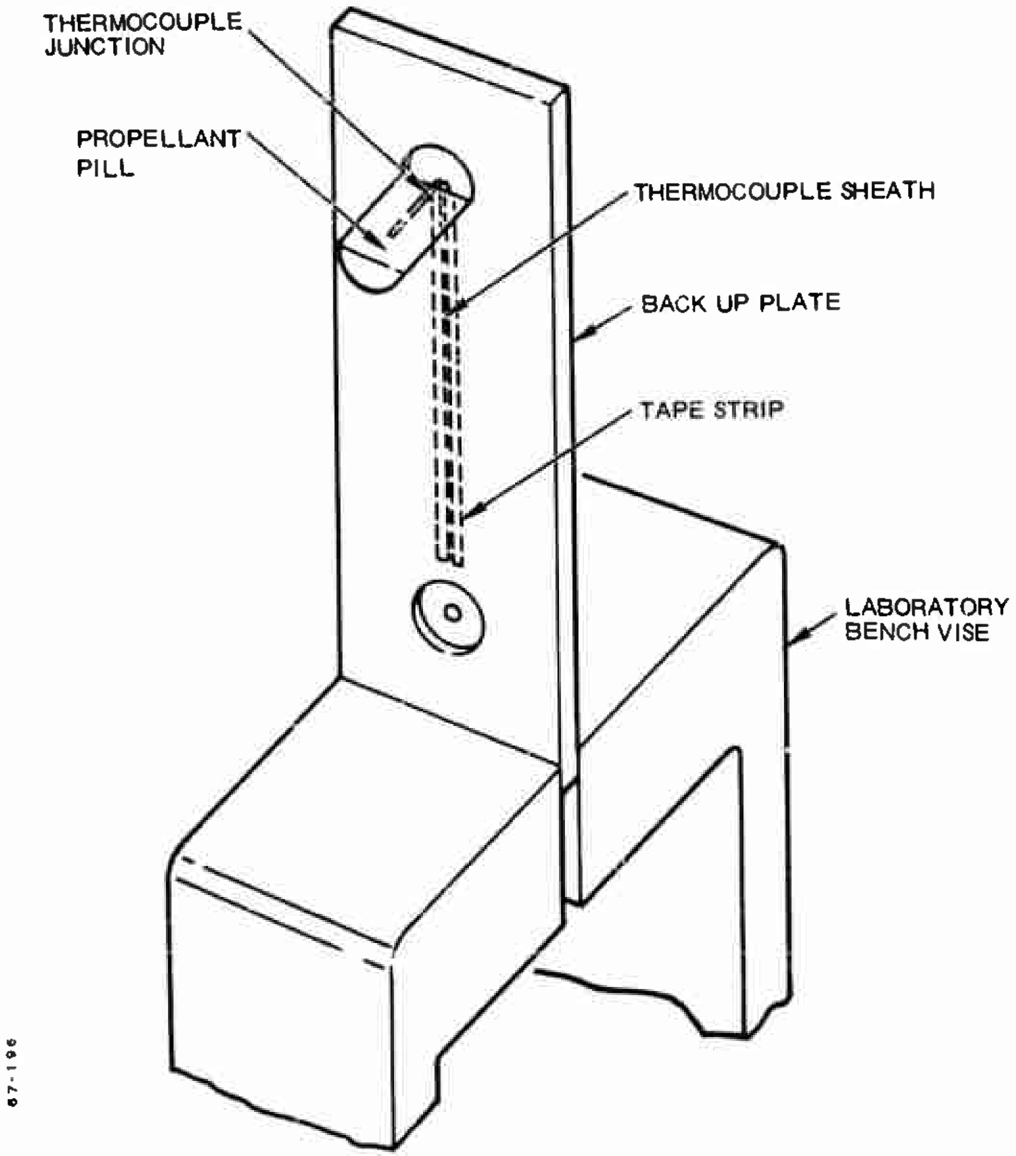

Figure 28 Back-up Plate with Propellant Pill

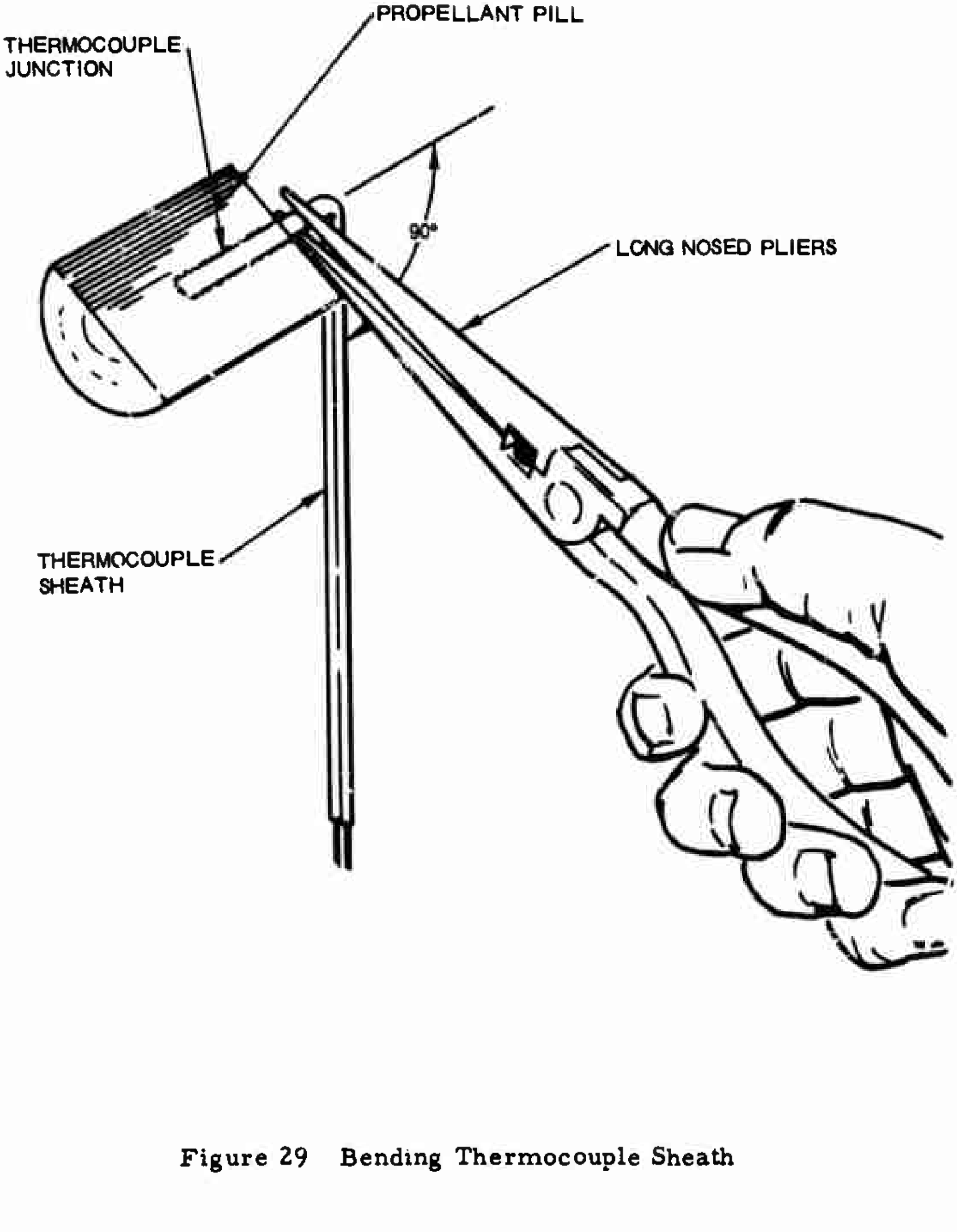

Figure 29 Bending Thermocouple Sheath

(5) Mount a second propellant pill containing a thermocouple in the second $\frac{1}{4}$-inch diameter hole if two thermocouples are required in the slab. (Follow steps 3 and 4.)

(6) Repeat steps 3 through 5 for the required number of back-up plates with two propellant pills containing a thermocouple.

(7) Repeat steps 3 and 4 for the required number of back-up plates with a single propellant pill containing a thermocouple.

   (a) Mount the single pill in accordance with steps 2 through 4.

   (b) Place tape over the open $\frac{1}{4}$-inch diameter hole.

(8) Select the specified number of back-up plates with no propellant pills containing a thermocouple. Identify the back-up plates with four drilled and tapped holes only.

(9) Assemble the slab mold and prepare for casting.

   (a) Apply a thin coat of silicon grease to the notch formed on the center Teflon guide.

   (b) Identify a Teflon-coated slab divider with one smooth side and one side containing a channel.

   (c) Insert the edge of the Teflon-coated slab divider into either one of the end notches of the center Teflon guide of the slab base. The channel side of the slab divider should face the center of the slab base as shown in Figure 30.

   (d) Place a steel back-up plate with propellant pills as prepared in steps 6 or 7 against the divider plate so that the taped thermocouple sheath lies within the channel.

NOTE: The masking tape must lie within the channel. Direct contact between the back-up plate and Teflon-coated slab divider is necessary to obtain the correct propellant thickness.

   (e) Insert a Teflon-coated slab divider in the notch of the center Teflon guide adjacent to that one occupied by the Teflon-coated slab divider installed previously. This then defines a cavity for a propellant slab to be cast.

   (f) Procede in a similar manner with additional Teflon-coated slab dividers and back-up plates until the specified number of slab cavities are formed.

NOTE: Always place the back-up plates so that the four drilled and tapped holes are in contact with a Teflon-coated slab divider.

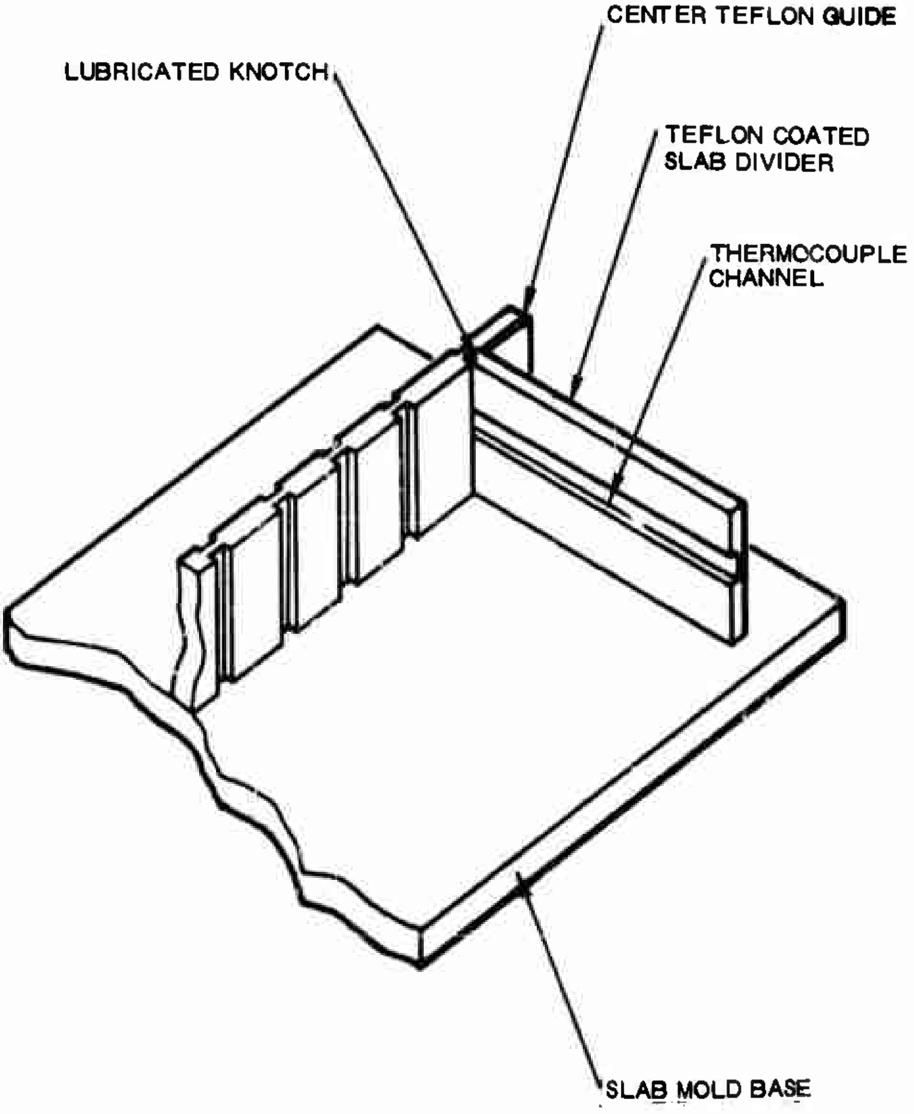

Figure 30 Slab Mold Base with First Teflon Slab Divider

(g) Identify the Teflon alignment tool (S/N 10)

(h) Align the Teflon-coated slab dividers on one side of the mold with the alignment tool so that the corresponding Teflon guide plate can be mated to the Teflon-coated divider plates. (Figure 30)

(i) Identify the aluminum side plate with clamps matching the chosen Teflon guide plate.

(j) Position the aluminum side plate with clamps and fix in place.

(k) Repeat steps 9h and 9i for the other side of the casting base.

(l) Install the three-holed Teflon strips (S/Ns 1, 7, and 8, and 4, 5, and 6).

(m) Install the two-holed Teflon strips (S/Ns 4, 8, and 5, 7, and 9, 2).

(n) Wrap a length of masking tape around the outer edge of the two and three-hole Teflon strips to reduce spillover of propellant during casting.

(o) Wrap masking tape around the four clamps.

(10) Mix a 5000-gram batch of the specified propellant and vacuum cast the propellant into the slab mold assembly while vibrating the mold.

(11) Draw propellant into ten sealant tanks for burning-rate measurement check of wet strands.

(12) Smooth the top surface of the slab mold with a spatula, leaving approximately ⅛-inch of propellant above the top of the divider edges.

(13) Cure propellant for the specified length of time.

(14) Remove slabs from the mold.

(a) Remove two-hole and three-hole Teflon strips from the mold.

(b) Remove the two aluminum side plates.

(c) Remove the two Teflon-notched guide plates.

(d) Insert a non-sparking knife between one of the end slab back-up plates and the adjacent Teflon-coated slab divider.

(e) Twist the knife and free slab from the mold base.

(f) Repeat steps 14d and 14e for the remaining slabs.

(15) Remove the Teflon-coated slab divider from the face of the propellant slab.

(a) Place the slab in a vise so that one jaw is in contact with the back-up plate and the other jaw is in contact with the Teflon-coated slab divider. (Figure 31)

(b) Break the bond between the Teflon-coated slab divider and the surface of propellant slab by drawing the vise jaws together.

(c) Repeat steps 15a and 15b for the remaining slabs.

(16) Trim excess propellant from the sides of each slab with the non-sparking knife.

(17) Inhibit the sides of the propellant slabs as specified in the order sheet.

NOTE: Do not allow inhibitor to be spread on the top surface (2 inch by 6 inch surface) of the slab.

(18) Store propellant slabs.

(a) Wrap each slab in aluminum foil and write the serial number for slab on foil (the serial number is given on the laboratory work request) and on a strip of masking tape which is fixed to the bottom of the back-up plate.

(b) Store all slabs in the magazine assigned to MPO-835.

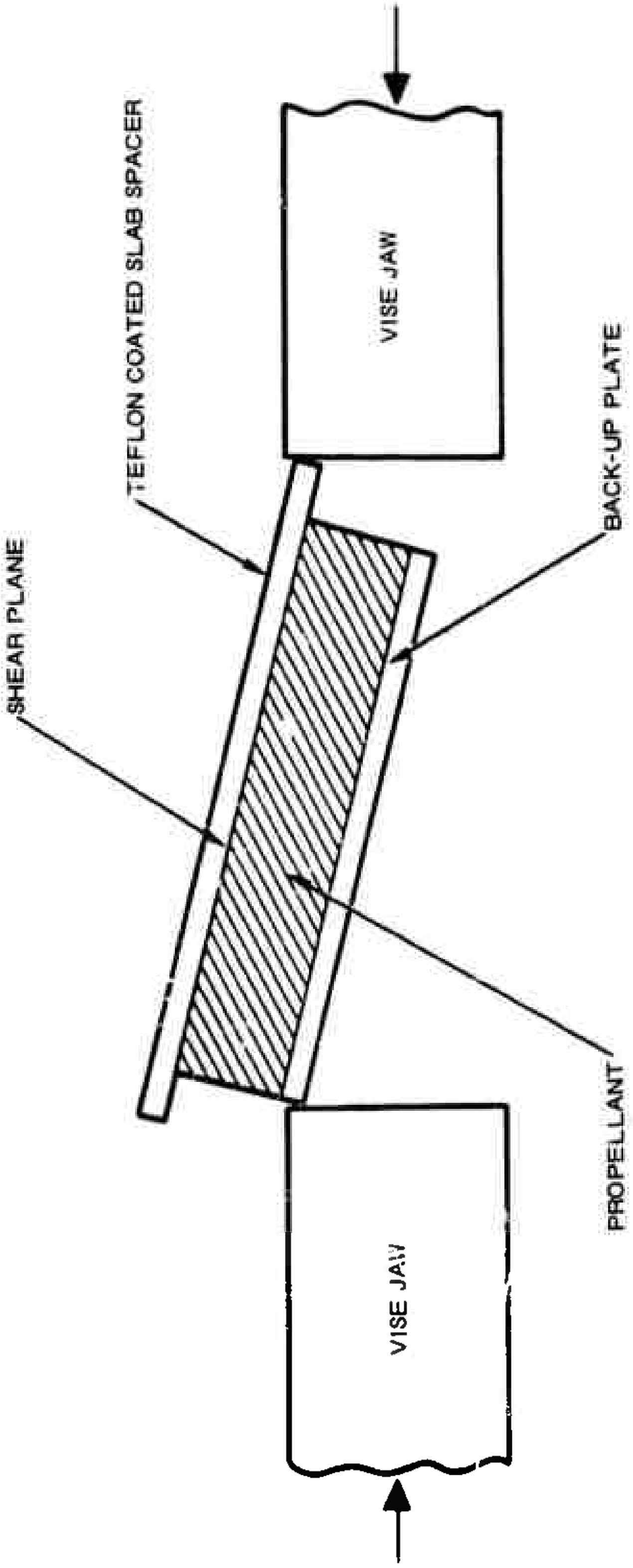

Figure 31 Removal of Teflon-Coated Divider Plate from Propellant Slab

APPENDIX II

THE COMBUSTION OF SOLID PROPELLANTS A LITERATURE SURVEY

Outline

- 4.3 DOUBLE-BASE INGREDIENTS
- 4.4 EFFECTS OF ENERGETIC ADDITIVES
    - 4.4.1 Metal Combustion
    - 4.4.2 Combustion of Metals in Propellants
    - 4.4.3 Effect of Metal Additives on Burning Rate
    - 4.4.4 Metal Combustion Efficiency and Two-Phase Flow Losses
- 4.5 CATALYSTS AND SUPPRESSANTS
    - 4.5.1 Effects of Catalysts and Suppressants on Burning Rate
    - 4.5.2 Effects on Propellant Ingredient Decomposition and Combustion Characteristics

5.0 DETERMINATION OF FUNDAMENTAL QUANTITIES ASSOCIATED WITH THE THEORIES

- 5.1 EMPIRICAL RELATIONSHIPS
    - 5.1.1 Burn Rate-Pressure Dependence
    - 5.1.2 Burn Rate-Temperature Dependence
    - 5.1.3 Effects of Solid Oxidizer Inhomogeneities
- 5.2 SOLID PHASE AND SURFACE PHENOMENA
    - 5.2.1 Evidence for Surface Reactions
    - 5.2.2 Appearance of the Surface
    - 5.2.3 Solid Phase Thermal Wave and Surface Temperature
    - 5.2.4 Heats of Reaction and Reaction Kinetics
- 5.3 SURFACE-COUPLED HETEROGENEOUS REACTIONS
    - 5.3.1 Evidence for Heterogeneous Reactions
    - 5.3.2 Heats of Reaction and Reaction Kinetics
- 5.4 GAS PHASE PHENOMENA
    - 5.4.1 Structure of the Reaction Zone in the Gas Phase
    - 5.4.2 Kinetics of Gas Phase Reactions

6.0 COMBUSTION INSTABILITY AS A TOOL IN COMBUSTION RESEARCH

- 6.1 COMBUSTION MODELS APPLIED TO INSTABILITY
- 6.2 ACOUSTIC COMBUSTION INSTABILITY AND L* COMBUSTION INSTABILITY
- 6.3 RESPONSE FUNCTIONS AND PHASE LAGS: RELATIONSHIP TO KINETICS
- 6.4 COMBUSTION INSTABILITY AND EXTINGUISHMENT

7.0 CONCLUDING REMARKS: PRESENT STATE OF KNOWLEDGE OF COMBUSTION

- Conclusions
- Recommendations

REFERENCES

1. J. Corner, "Internal Ballistics," Philosophic Library, New York, 1951, Chapter 3

2. R. L. Coates, N. S. Cohen and L. R. Harvill, "An Interpretation of L*Combustion Instability in Terms of Acoustic Instability Theory," J. AIAA 5 (June 1967), P. 1097.

3. M. W. Beckstead, "Non-Acoustic Combustion Instability of Solid Propellants," Ph. D. Thesis, Ch. E. Dept., University of Utah, June 1965; also cf. J. AIAA 4, 1622-1628, Sept. 1966

4. C. L. Oberg, and A. L. Heubner, Effects of Aluminum on Solid Propellant Combustion Instability, Report R6654 on Contract AF 49(638)-1575, Rocketdyne Division of North American Aviation, Canoga Park, Calif., July 1966

5. E. Capaner, L. Dickinson, G. Marxman, "Propellant Composition as a Factor in Extinguishability and Instability," Proceedings of the Third ICRPG Combustion Conference, CPIA Publication No. 138, Vol. I, February 1967. P. 321

6. A. J. Sabadell, J. Wenograd and M. Summerfield, "Measurement of Temperature Profiles Through Solid Propellant Flames Using Fine Thermocouples," J. AIAA 3, September 1965, p. 1580

7. J. D. Huffington, Trans. Fara. Soc. 50, 1954, p. 50

8. "Low Frequency Combustion Instability of Solid Rocket Propellants," U. S. Naval Ordnance Testing Station, Technical Progress Report 360, NOTS TP-3524. China Lake, Calif., July 1964

9. L. D. Strand, Low Pressure Combustion Studies, Space Programs Summary Report 37-25, Vol. IV, Jet Propulsion Laboratories, Pasadena, Calif., February 1964, p. 60, CONFIDENTIAL

10. Stanford Research Institute, Annual Report on Contract AF 49(638)-1367, Menlo Park, Calif., January 1965

11. Lockheed Missiles & Space Company, Report 5-90-63-80, Sunnyvale, Calif., July 1963

12. C. F. Price and L. D. Smoot, "Regression Rates of Nonmetallized Hybrid Fuel Systems," J. AIAA 3, (August 1965), P. 1408.

13. C. F. Price and L. D. Smoot, "Regression Rates of Metallized Hybrid Fuel Systems," J. AIAA 4, (May 1966), P. 910.

14. C. F. Price, L. D. Smoot and C. M. Mihlfeith, "The Pressure Dependence of Hybrid Fuel Regression Rates," J. AIAA 5 (Jan. 1967), P. 102.

15. F. G. Buffum, et al., "Acoustic Attenuation Experiments on Subscale Cold-Flow Rocket Motors," J. AIAA 5, 272-280, Feb. 1967; also private communication with E. W. Price, USNWC (formerly NOTS), June 1967.

16. R. Klein, M. Mentser, G. von Elbe and B. Lewis, "Determination of the Thermal Structure of a Combustion Wave by Fine Thermocouples," J. Phys. Chem., 54, 1950, p. 877.

17. C. A. Heller and A.S. Gordon, "Structure of the Gas Phase Combustion Region of a Solid Double-Base Propellant," J. Phys. Chem. 59, P. 773. 1955

18. R. C. Strittmater, L. A. Watermeier and H. E. Holmes, "Study of Temperature Profiles in Burning Solid Propellants," Proceedings of the First ICRPG Combustion Conference, CPIA Publication 68, Vol. I, Jan. 1965, P. 431.

19. N. S. Cohen, Additional Igniter Flow Studies, II. Experimental Results, Analysis, and Information for Igniter Design, TM12SR0, Aerojet-General Corp., Sacramento, Calif., December 1964

20. J. A. Keller, A. D. Baer and N. W. Ryan, "Ignition of Ammonium Perchlorate Composite Propellants by High Convective Heat Fluxes," Proceedings of the Second ICRPG Combustion Conference, CPIA Publication 105, Vol. I, May 1966, p. 539

21. E.K. Bastress, "Test Methods for Solid Propellant Rocket Igniter Development," Proceedings of the Second ICRPG Combustion Conference, CPIA Publication 105, Vol. I, May 1966, p. 551

22. "Hybrid Propulsion Research (U)," Series of Quarterly Progress Reports on Contracts DA-04-495-ORD-3577, DA-04-495-AMC-218(Z), Lockheed Propulsion Company, Redlands, Calif., 1962-1966, CONFIDENTIAL

23. L. Povinelli, "Spectrographic Measurements of Composite Propellant Flame Zone Structure," Proceedings of the First ICRPG Combustion Conference, Vol. I, CPIA Publication 68, January 1965, p. 331

24. R. A. W. Waesche, "Effects of Pressure and Formulation on the Emission Spectra of Solid Propellants," Presented at the Third ICRPG Combustion Conference, JFK Space Center, Cocoa Beach, Fla., October 1966

25. Lockheed Propulsion Company, Progress Reports on Contract DA-04-495-AMC-239(R), Redlands, Calif., 1964-1965

26. M. Barrere, et al., Rocket Propulsion, Elsevier Press, New York, 1960, p. 625

27. J. Powling and W. A. W. Smith, "The Surface Temperature of Burning Ammonium Perchlorate," Combust. and Flame 7, September 1963, p. 269

28. J. L. McGurk, "Microscopic Determination of Propellant Combustion Surface Temperature," Proceedings of the First ICRPG Combustion Conference, Vol. I, CPIA Publication 68, January 1965, p. 345

29. J. E. Crump, "Aluminum Combustion in Composite Propellants," Proceedings of the Second ICRPG Combustion Conference, CPIA Publication 105, Vol. I, May 1966, p. 321

30. J.R. Simms, B.Y.S. Lee and F. C. Zarlingo, "Development and Testing of Solid Propellants for Air Augmentation," Proceedings of the Joint AIAA/ICRPG Solid Propulsion Conference, CPIA Publication 111, Vol. II, June 1966, p. 743

31. E. A. Burns, "Analysis of Minuteman Exhaust Products," Final Report on Project PRD-3753, Stanford Research Institute, Menlo Park, Calif., Oct. 1962

32. H. Cheung and N. S. Cohen, "Performance of Solid Propellant Containing Metal Additives," J. AIAA 3, February 1965, p. 250; also cf. Ref. 77.

33. R. Sehgal, An Experimental Investigation of a Gas-Particle System, Report TR-32-238, Jet Propulsion Laboratories, Pasadena, Calif., March 1962

34. R. R. Miller, "Some Factors Affecting the Combustion of Aluminum in Solid Propellants," Proceedings of the Second ICRPG Combustion Conference, CPIA Publication 105, Vol. I, May 1966, p. 331; also see the Bulletin alluded to in Ref. 18.

35. E. W. Price, "L* Combustion Instability," Proceedings of the First ICRPG Combustion Conference, Vol. I, CPIA Publication 68, January 1965, p. 507

36. R. L. Coates, C. F. Price and R. Polzien, "Design Procedures for Combustion Termination by Nozzle Area Variation," J. Spacecraft and Rockets 3, March 1966, p. 419

37. R. L. Coates, N. S. Cohen and J. H. Bonin, "Thrust Magnitude and Restart Control of Solid Propellants by Injection of Hypergolic Fluids," J. Spacecraft & Rockets 4 (Mar 1967), P. 354.

38. Chemical Engineers Handbook, 3rd Textbook Edition, J. H. Perry, McGraw-Hill, New York, 1950, p. 1023

39. A. Donaldson, A. Baer, N. Ryan and P. Ryan, "Extinguishment of Composite Propellants by Rapid Depressurization," Proceedings of the Second ICRPG Combustion Conference, CPIA Publication No. 105, Vol. I, May 1966, P. 697.

40. Aerojet General Corporation, "Development of an Extinguishable Solid Propellant (U)," Final Report 0855-81F, Sacramento, Calif., July 1965. CONFIDENTIAL.

41. Aerojet General Corporation, "Theoretical and Experimental Characterization of a Technique for Extinguishment of Solid Propellant Rocket Motors (L*) (U)," Technical Report No. AFRPL-TR-65-256, Sacramento, California, December 1965, CONFIDENTIAL

42. C. Hermance, "A Model of Composite Propellant Combustion Including Surface Heterogeneity and Heat Generation," AIAA J., 4, 9, 1966, p. 1629.

UNCLASSIFIED
Security Classification

DOCUMENT CONTROL DATA - R&D

(Security classification of title, body of abstract and indexing annotation must be entered when the overall report is classified)

1 ORIGINATING ACTIVITY *(Corporate author)* Lockheed Propulsion Company A Division of Lockheed Aircraft Corporation P. O. Box 111, Redlands, California	2a REPORT SECURITY CLASSIFICATION Confidential-Noforn 2b GROUP 4

3 REPORT TITLE

Combustion Tailoring Criteria for Solid Propellants

4 DESCRIPTIVE NOTES *(Type of report and inclusive dates)*

Phase I Report, covering period 15 March to 15 October 1967

5 AUTHOR(S) *(Last name, first name, initial)*

Cohen, Norman S.; Derr, Ronald L.

6 REPORT DATE 20 November 1967	7a TOTAL NO. OF PAGES 94	7b. NO. OF REFS 42

8a CONTRACT OR GRANT NO. F04611-67-C-0089 b. PROJECT NO.	9a. ORIGINATOR'S REPORT NUMBER(S) LPC Report 835 Phase I
c. d	9b. OTHER REPORT NO(S) *(Any other numbers that may be assigned this report)*

10 AVAILABILITY/LIMITATION NOTICES

Qualified requesters may obtain copies of this report from DDC. Foreign announcements and dissemination of this report by DDC is not authorized.

11 SUPPLEMENTARY NOTES	12. SPONSORING MILITARY ACTIVITY Air Force Rocket Propulsion Laboratory Research and Technology Division Air Force Systems Command United States Air Force, Edwards, Calif.

13 ABSTRACT

The objective of this work is to study experimentally the fundamental combustion characteristics of solid propellants in a simulated motor environment, and to perform analytical work directed toward the scientific combustion tailoring of solid propellants for particular applications. The experiments are designed to investigate three basic phases of solid propellant combustion: steady state, transient conditions of instability and extinguishment, and induced oscillatory conditions. Propellants representing a wide range of both state-of-the-art and advanced constituents will be tested. In this phase of the program work has been directed towards the completion of a literature survey to establish the state of knowledge of the combustion of solid propellants. In addition, apparatus has been designed and fabricated for the experimental program. Techniques of using the apparatus have been established and pre-check testing of the equipment is in progress.

DD FORM 1 JAN 64 1473

UNCLASSIFIED
Security Classification

UNCLASSIFIED
Security Classification

14. KEY WORDS	LINK A		LINK B		LINK C	
	ROLE	WT	ROLE	WT	ROLE	WT
Solid Propellant Combustion						
Steady-state Combustion						
Instability and Extinguishment						
Combustion Kinetics						

INSTRUCTIONS

1. **ORIGINATING ACTIVITY:** Enter the name and address of the contractor, subcontractor, grantee, Department of Defense activity or other organization (*corporate author*) issuing the report.

2*a*. **REPORT SECURITY CLASSIFICATION:** Enter the overall security classification of the report. Indicate whether "Restricted Data" is included. Marking is to be in accordance with appropriate security regulations.

2*b*. **GROUP:** Automatic downgrading is specified in DoD Directive 5200.10 and Armed Forces Industrial Manual. Enter the group number. Also, when applicable, show that optional markings have been used for Group 3 and Group 4 as authorized.

3. **REPORT TITLE:** Enter the complete report title in all capital letters. Titles in all cases should be unclassified. If a meaningful title cannot be selected without classification, show title classification in all capitals in parenthesis immediately following the title.

4. **DESCRIPTIVE NOTES:** If appropriate, enter the type of report, e.g., interim, progress, summary, annual, or final. Give the inclusive dates when a specific reporting period is covered.

5. **AUTHOR(S):** Enter the name(s) of author(s) as shown on or in the report. Enter last name, first name, middle initial. If military, show rank and branch of service. The name of the principal author is an absolute minimum requirement.

6. **REPORT DATE:** Enter the date of the report as day, month, year; or month, year. If more than one date appears on the report, use date of publication.

7*a*. **TOTAL NUMBER OF PAGES:** The total page count should follow normal pagination procedures, i.e., enter the number of pages containing information.

7*b*. **NUMBER OF REFERENCES:** Enter the total number of references cited in the report.

8*a*. **CONTRACT OR GRANT NUMBER:** If appropriate, enter the applicable number of the contract or grant under which the report was written.

8*b*, 8*c*, & 8*d*. **PROJECT NUMBER:** Enter the appropriate military department identification, such as project number, subproject number, system numbers, task number, etc.

9*a*. **ORIGINATOR'S REPORT NUMBER(S):** Enter the official report number by which the document will be identified and controlled by the originating activity. This number must be unique to this report.

9*b*. **OTHER REPORT NUMBER(S):** If the report has been assigned any other report numbers (*either by the originator or by the sponsor*), also enter this number(s).

10. **AVAILABILITY/LIMITATION NOTICES:** Enter any limitations on further dissemination of the report, other than those imposed by security classification, using standard statements such as:

(1) "Qualified requesters may obtain copies of this report from DDC."

(2) "Foreign announcement and dissemination of this report by DDC is not authorized."

(3) "U. S. Government agencies may obtain copies of this report directly from DDC. Other qualified DDC users shall request through
_______________________________________."

(4) "U. S. military agencies may obtain copies of this report directly from DDC. Other qualified users shall request through
_______________________________________."

(5) "All distribution of this report is controlled. Qualified DDC users shall request through
_______________________________________."

If the report has been furnished to the Office of Technical Services, Department of Commerce, for sale to the public, indicate this fact and enter the price, if known.

11. **SUPPLEMENTARY NOTES:** Use for additional explanatory notes.

12. **SPONSORING MILITARY ACTIVITY:** Enter the name of the departmental project office or laboratory sponsoring (*paying for*) the research and development. Include address.

13. **ABSTRACT:** Enter an abstract giving a brief and factual summary of the document indicative of the report, even though it may also appear elsewhere in the body of the technical report. If additional space is required, a continuation sheet shall be attached.

It is highly desirable that the abstract of classified reports be unclassified. Each paragraph of the abstract shall end with an indication of the military security classification of the information in the paragraph, represented as (*TS*), (*S*), (*C*), or (*U*).

There is no limitation on the length of the abstract. However, the suggested length is from 150 to 225 words.

14. **KEY WORDS:** Key words are technically meaningful terms or short phrases that characterize a report and may be used as index entries for cataloging the report. Key words must be selected so that no security classification is required. Identifiers, such as equipment model designation, trade name, military project code name, geographic location, may be used as key words but will be followed by an indication of technical context. The assignment of links, rules, and weights is optional.

UNCLASSIFIED
Security Classification

SUPPLEMENTARY

INFORMATION

ERRATA

Technical Report AFRPL-TR-67-282, November 1967

COMBUSTION TAILORING CRITERIA FOR SOLID PROPELLANTS (U)

Air Force Rocket Propulsion Laboratory
Research and Technology Division
Air Force Systems Command
United States Air Force
Edwards, California

The following changes should be made in subject report.

(U) List of Illustrations, page -viii-

Figure 4, "Particle Trading," should read "Particle Tracking....."

(U) Section II, Paragraph 1.c. COMBUSTION KINETICS

Page 4 Delete two commas from next to final sentence in paragraph. Sentence should read as follows: "By varying perturbation frequency, response function and phase shift curves can be generated with which to verify the model's consistency."

Page 5 Delete final comma in first paragraph. Sentence should read as follows: "It is anticipated that the generation of combustion data for a variety of propellant families for comparative study will reveal phenomenological descriptions which are of general applicability, or where modifications are required to account for specific processes which may be unique."

Page 6 In first sentence, the L^* and P extinguishment.... should read, "The L^* and $\dot{P}$ extinguishment...."

(U) Section III, Page 18

Delete minus sign from footnote.

Page 21 Figure 4 caption should read: "Particle Tracking Observed...."

Pages 23 and 24, Figures 5 and 6 were classified in error. Both figures should be unclassified.

(U) Section IV, Page 39

Paragraph 1.a.

Second sentence should read, "Burning rate data are provided in Figure 15, and reported L^* and $\dot{P}$ properties...."

(C) Table II, Page 44

Column entries are amended to read: "Ball Powder B, Ball Powder C, TEGDN, TMETN, Resorcinol, HMX (Class A), AP (Type II, Size 1), Aluminum (Valley, H-5)."