ENG.20050214.0007

OCRWM	**DESIGN CALCULATION OR ANALYSIS COVER SHEET**	1. QA: QA 2. Page 1 of 25

3. System AGING AREA	4. Document Identifier 170-00C-HAP0-00100-000-00B

5. Title
DESIGN OF A CONCRETE SLAB FOR STORAGE OF SNF AND HLW CASKS

6. Group
CSA

7. Document Status Designation

☒ Preliminary ☐ Final ☐ Cancelled

8. Notes/Comments

The calculations contained in this document were developed by the Civil/Structural/Architectural (C/S/A) group of the Design and Engineering Department and are intended solely for the use of this department in its work regarding the structural design and analysis of surface facilities. Yucca Mountain Project personnel from the C/S/A group should be consulted before use of the calculations for purposes other than those stated herein or use by individuals other than authorized personnel in the Design and Engineering Department.

Attachments	Total Number of Pages
Attachment A – GT STRUDL Model and Anchorage Design	50

RECORD OF REVISIONS

9. No.	10. Reason For Revision	11. Total # of Pgs.	12. Last Pg. #	13. Originator (Print/Sign/Date)	14. Checker (Print/Sign/Date)	15. QER (Print/Sign/Date)	16. Approved/Accepted (Print/Sign)	17. Date
00A	Initial Issue	214	C1	John Bisset	Brij Kumar	Jerry Heaney	Richard Pernisi Colin Cochrane	05/04/04
00B	Complete rewrite of the calculation; required to incorporate revised pad plan dimensions and cask size and layout.	75	A50	John Bisset John Bisset 02/08/2005	Adelio A. Amar Adelio A. Amar 02/00/2005	J. F. Lacret Joe F. Lacret 02/10/2005	Richard Pernisi Colin Cochrane	2/14/05 2/14/05

NOTICE OF OPEN CHANGE DOCUMENTS - THIS DOCUMENT IS IMPACTED BY THE LISTED CHANGE DOCUMENTS AND CANNOT BE USED WITHOUT THEM.

----

1) ECN-001, DATED 08/29/2005

Table of Contents

1.0 Purpose and Scope

This calculation documents the design of the Spent Nuclear Fuel (SNF) and High-Level Waste (HLW) Cask storage slab for the Aging Area. The design is based on the weights of casks that may be stored on the slab, the weights of vehicles that may be used to move the casks, and the layout shown on the sketch for a 1000 Metric Ton of Heavy Metal (MTHM) storage pad on Attachment 2, Sht.1 of the calculation 170-C0C-C000-00100-000-00A (BSC 2004a). The analytical model used herein is based on the storage area for 8 vertical casks. To simplify the model, the storage area of the horizontal concrete modules and their related shield walls is not included. The heavy weights of the vertical storage casks and the tensile forces due to pullout at the anchorages will produce design moments and shear forces that will envelope those that would occur in the storage area of the horizontal modules. The design loadings will also include snow and live loads. In addition, the design will also reflect pertinent geotechnical data. This calculation will document the preliminary thickness and general reinforcing steel requirements for the slab. This calculation also documents the initial design of the cask anchorage. Other slab details are not developed in this calculation. They will be developed during the final design process. The calculation also does not include the evaluation of the effects of cask drop loads. These will be evaluated in this or another calculation when the exact cask geometry is known.

2.0 Quality Assurance

Table A-2 of the Q-List (BSC 2004b) identifies the Aging Pad as an Important-to-Safety (ITS) system. Consequently, the provisions of the Quality Assurance Requirements and Description (QARD) document (DOE 2004) apply to this calculation. This calculation was developed in accordance with the requirements of procedure AP-3.12Q.

3.0 Design Input

Information on a potential cask transporter is taken from J & R Engineering (2003). The supplemental soil report for the Waste Receiving and Preparation System (BSC 2004f) provides the pertinent geotechnical data. The sketch for a 1000 MHTM storage pad on Attachment 2, Sht.1 of the calculation 170-C0C-C000-00100-000-00A (BSC 2004a) gives the pad layout (reproduced on pg. A).

4.0 Assumptions

1. The transporter is assumed to be unloaded during seismic events. The rationale for this assumption is that for the limited time the transporter is used on the pad, the probability that it would be on the pad and loaded during a seismic event is very low.
2. The design storage cask is assumed to be similar to a HI-STORM 100SA cask only with a maximum weight of 200 tons (vs 180 tons for the HI-STORM 100SA(HOLTEC 2002)), a maximum height of 245 in., a height to the CG of 120 in, and a diameter of 11’-01/2”. The rationale for this assumption is to base the pad design on the largest vertical storage cask that might be stored on it (see HOLTEC 2002), with an additional margin on its potential weight.
3. The cask pad is assumed to be founded on alluvium. The rationale for this assumption is that the latest soils report (BSC 2004f) indicates varying soil properties for the different types of soil the pad may be supported by . A soil type should be chosen to permit using appropriate soil properties. Given the

large thicknesses of the pad – up to 7 feet – it is reasonable to assume alluvium as the foundation soil. This will be confirmed in final design.

5.0 References

Note: acronyms within { } indicate acronyms used to refer to the references in the body of the calculation.

1. BSC (Bechtel SAIC Company) 2004a. *Midway Valley Aging Site Layout Drawing Support Calculation.* 170-C0C-C000-00100-000-00A. Las Vegas, Nevada: Bechtel SAIC Company. ACC: ENG.20040410.0025. DIRS: 168429.
2. BSC (Bechtel SAIC Company) 2004b. *Q-List.* 000-30R-MGR0-00500-000-000 REV 00. Las Vegas, Nevada: Bechtel SAIC Company. ACC: ENG.20040721.0007. DIRS: 168361.
3. DOE (U.S. Department of Energy) 2004. *Quality Assurance Requirements and Description.* DOE/RW-0333P, Rev. 16. Washington, D.C.: U.S. Department of Energy, Office of Civilian Radioactive Waste Management. ACC: DOC.20040907.0002. DIRS: 171539.
4. AP-3.12Q, Rev. 2, ICN 2. *Design Calculations and Analyses*. Washington D. C.: U.S. Department of Energy, Office of Civilian Radioactive Waste Management. ACC: DOC.20040318.0002
5. HOLTEC 2002. *Final Safety Analysis Report for the HOLTEC International Storage and Transfer Operation Reinforced Module Cask System (HI-STORM 100 Cask System), NRC Docket No. 72-1014*. HOLTEC Report HI-2002444, Volume I of II. Marlton, NJ: HOLTEC International. Readily Available. DIRS: 168494.
6. J and R Engineering Company 2003. Lift-n-Lock Crawler Transporter. Mukwonago, WI: J and R Engineering Company. TIC: 255674. DIRS: 168576.
7. BSC 2003a. *Software Code: GT STRUDL.* V26. PC Windows 2000. 10829-26-00. DIRS: 166081.
8. BSC 2004c. *Project Design Criteria Document.* 000-3DR-MGR0-00100-000-003. Las Vegas, Nevada: Bechtel SAIC Company. ACC: ENG.20041124.0001. DIRS: 171599.
9. NRC (U.S. Nuclear Regulatory Commission) 1987. *Standard Review Plan for the Review of Safety Analysis Reports for Nuclear Power Plants.* NUREG-0800. LWR Edition. Washington,D.C.: U.S. Nuclear Regulatory Commission. TIC:203894. DIRS: 103124.
10. ACI 2001a. *Code Requirements for Nuclear Safety Related Concrete Structures (ACI 349-01) and Commentary (ACI 349R-01)*. Farmington Hills, Michigan. American Concrete Institute. TIC: 252732. DIRS: 158833.
11. ANSI/AISC N690-1994. 1994. *American National Standard for Nuclear Facilities - Steel Safety-Related Structures for Design Fabrication and Erection.* Chicago, Illinois: American Institute of Steel Construction. TIC: 252734. DIRS: 158835. {AISC N690}
12. MO0411SDSTMHIS.006. Seismic Design Spectra and Time Histories for the Surface Facilities Area (Point D/E) at 5E-4 Annual Exceedance Frequency. Submittal date: 11/16/2004. DIRS: 172426.
13. MO0402SDSTMHIS.004. Seismic Design Spectra and Time Histories for the Surface Facilities Area (Point D/E) at 5E-4 Annual Exceedance Frequency. Submittal date: 02/09/2004. DIRS: 167424.

14. DOE 2003. *Validation Test Process for: GT STRUDL VERSION 26.* 10829-VTP-26-00. Las Vegas, Nevada: U.S. Department of Energy, Office of Repository Development. ACC: MOL.20030521.0190. DIRS: 168476.
15. LP-SI.11Q-BSC, Rev. 0, ICN 1. *Software Management*. Washington D. C.: U.S. Department of Energy, Office of Civilian Radioactive Waste Management. ACC: DOC.20041005.0008.
16. ACI 2001b. *Design of Slabs on Grade (ACI 360R-92, Reapproved 1997) [reprint.2001].* Farmington Hills, Michigan. American Concrete Institute. TIC: 255548. DIRS: 167242.
17. MacGregor J. G. 1997, *Reinforced Concrete - Mechanics and Design (3rd ed.)*. Upper Saddle River, New Jersey. Prentice-Hall. TIC: 242587. DIRS: 130532.
18. Young W. C. 1989. *Roark's Formulas for Stress and Strain (Sixth Edition*). New York, New York. McGraw-Hill. TIC: 10191. DIRS: 106720.
19. Bowles, J. E. 1996. *Foundation Analysis and Design (5th ed.).* New York, New York. McGraw-Hill. TIC: 247039. DIRS: 157929.
20. ASCE 7-02. 2003. *Minimum Design Loads for Buildings and Other Structures.* Reston, Virginia: American Society of Civil Engineers. TIC: 255517. DIRS: 168388. {ASCE 7-02}
21. BSC 2004d. *Seismic Analysis and Design Approach Document.* 100-S0C-CY00-00300-000-00A. Las Vegas, Nevada: Bechtel SAIC Company. ACC: ENG.20040405.0017. DIRS: 166673.
22. Chu, Shih-Lung, Fang, Shu-Jin, Zar, Max 1997. *"Chimneys," Section 32 in Structural Engineering Handbook.* 4th. Gaylord, E.H., Jr.; Gaylord, C.N.; Stallmeyer, J.E.; eds. New York, NY: McGraw-Hill. TIC: 255067. DIRS: 168404.
23. ICC (International Code Council) 2000. *International Building Code 2000* (IBC).Falls Church, Virginia: International Code Council. TIC: 251054. DIRS: 159179. {IBC}
24. BSC (Bechtel SAIC Company) 2004. *Extreme Wind/Tornado/Tornado Missile Hazard Analysis.* 000-00C-WHS0-00100-000-00B. Las Vegas, Nevada: Bechtel SAIC Company. ACC: ENG.20041105.0001. DIRS: 171471.
25. ASME (American Society of Mechanical Engineers) 2004. *2004 ASME Boiler and Pressure Vessel Code.* 2004 Edition. New York, New York: American Society of Mechanical Engineers. TIC: 256479. DIRS: 171846.
26. AISC (American Institute of Steel Construction) 1989. *Manual of Steel Construction, Allowable Stress Design.* 9th Edition. Chicago, Illinois: American Institute of Steel Construction. TIC: 205770. DIRS: 107536.
27. Womack, L. F. 2001b, " Diablo Canyon Independent Spent Fuel Storage Installation : Submittal of Non-Proprietary Calculation Packages [Docket No. 72-26]." Letter from L.F. Womack (PG&E) to U.S. Nuclear Regulatory Commission, December 21, 2001, PG&E Letter DIL-01-004, dated December 21, 2001, with enclosures. TIC: 256634. DIRS: 172395.
28. BSC (Bechtel SAIC Company) 2004f. *Supplemental Soils Report.* 100-S0C-CY00-00100-000-00A. Las Vegas, Nevada: Bechtel SAIC Company. ACC: ENG.20041108.0006. DIRS: 166067.

6.0 Design Methodology

The slab is designed as a soil supported two-way slab. Internal moments and shear forces are determined by appropriate analyses using the structural analysis program GT-STRUDL V26 (STN: 10829-26-00), BSC 2003a. The concrete slab is modeled as a large flat plate using plate finite elements. The supporting soil is modeled as a series of non-linear springs. Spring properties are based on data from the Soils Report

(BSC 2004f) to model the stiffness of the supporting soil. Reactions from the stored casks are modeled as nodal point loads acting on the elements corresponding to the storage locations. The wheel loads from the transporter are also modeled as point loads at appropriate nodes of the slab model. Dead loads will include the self-weight of the slab. Earthquake loads will include inertial forces acting on the pad and the casks, based on equivalent static acceleration factors to model the effects of earthquakes.

The design calculations also include the evaluation of overturning and sliding.

Reactions from seismic, wind, and tornado forces acting on the storage casks are used to design an anchorage system for the casks. Standard structural analysis techniques are used to develop the reactions acting on the various components of the anchorage system.

6.1 Acceptance Criteria

Section 4.2.2.4.11 of the Project Design Criteria (PDC) (BSC 2004c) requires foundation designs to meet the requirements of Standard Review Plan (SRP) 3.8.5 of NUREG-0800 (NRC 1987). Subsection II. 3. of SRP 3.8.5 states that loads and load combinations used in the design are acceptable if the requirements of SRP 3.8.4 are satisfied. General structural acceptance criteria are provided in Section II. 5 of SRP 3.8.4.

The ultimate capacities of the concrete components, including embedded components of the anchorage system, are based on the provisions of the ACI-349 code (ACI 2001a). The allowable stresses for the un-embedded steel components of the anchorage system are based on the provisions of the AISC N690 code (ANSI/AISC 1994).

Allowable soil bearing stresses are taken from the soils report (BSC 2004f), and are provided below in subsection 6.4, “Material Properties.”

6.2 Loads

The following loads are considered in the design of the slab:

Dead Load (D):
Dead loads are the weights of the permanently attached structures and equipment and include the self-weight of the slab. Since the casks will reside on the aging pad for considerable lengths of time, they will be treated as dead loads. The pad design will be based on storing a number of casks similar to the HI-STORM 100SA (232) (HOLTEC 2002) as modified by Assumption 2. In this design, a fully loaded cask weight of 200 tons is used.

Snow Loads (S):
Per section 6.1.1.1 of the PDC (BSC 2004c), the slab will be designed for a maximum snow depth of 4”. The snow load magnitude, based on the provisions of ASCE 7-02, is determined in Section A1.2.

Live Loads (L & Lr):
Live loads are those produced by the use of the facilities. The live loads also include the track loads from the cask transporter. The information in J & R Engineering (2003) gives the total loaded weight of the

transporter as 135000 lbs. Wheel loads for input into the GT-STRUDL model based on these weights are determined in Attachment A. The analysis includes two positions for an unloaded transporter and three positions for a loaded transporter. Live loads also include a uniform load of 150 psf. This represents a conservative estimate of loads due to activities on the slab.

Wind and Tornado Loads (W & Wt)
Per PDC (BSC 2004c) 4.2.2.3.6, wind loads shall be based on an extreme wind velocity of 90 mph., also, per PDC (BSC 2004c) 4.2.2.3.7, tornado loads shall be based on a maximum wind velocity of 189 mph.

Earthquake, or Seismic, Loads (E'):
Paragraph II.B.1.b of Standard Review Plan (SRP) 3.7.2 of NUREG-0800 (NRC 1987) requires a 1.5 factor be applied to the peak acceleration of the applicable floor response spectrum unless a lower value can be justified to model the potential effects of higher modes. For seismic forces acting on the casks, a equivalent static force of 1.5 times the acceleration at 7% damping for its fundamental frequency is used. For the slab, the Zero Period Acceleration (ZPA) represents the peak acceleration and an amplification factor of 1.0 is justified since a slab on grade essentially becomes part of the earth and will not be subjected to the effects of higher modes. Table 6.1.3-1 of the PDC (BSC 2004c) identifies DTN: MO0411SDSTMHIS.006 as the appropriate response spectra for a point located on the soil surface (pt. D in Figure 6.1.3.1 of the PDC), however data from DTN: MO0402SDSTMHIS.004 has been used in this calculation. This is acceptable since the results for 7% damping from the latter DTN envelope those from DTN: MO0411SDSTMHIS.006. DTN MO0402SDSTMHIS.004 provides the horizontal and vertical response spectra accelerations used in this calculation (see sht. A14 of attachment A).

6.3 Load Combinations

Since soil bearing pressures are verified based on unfactored loads, the following unfactored and factored load combinations are considered in the analysis of the slab; these are based on those given in Section 4.2.2.4.5 of the PDC:

Load Combination	Limit
1. D + S + L	Soil (1)
2. D + S + L + W	Soil
3. D + W	Soil
4. 1.4D + 1.7S + 1.7L	U (2)
5. 1.4D + 1.7S + 1.7L + 1.7W	U
6. D + L + Wt	U, Soil
7. D + Wt	U, Soil
8. D + L + E'	U, Soil
9. 0.9D + E'	U, Soil

Notes: (1) Soil – allowable soil bearing strength and/or structure stability; see Section 6.4 below.
(2) U – required section strength based on Ultimate Strength Design (USD) using the provisions of ACI 349 (ACI 2001a).

6.4 Material Properties

Reinforced Concrete:

f_c = Concrete Strength, Slab = 5000 psi	Sect. 4.2.2.6.2 of the PDC (BSC 2004c)
fcc = Concrete Strength, Cask = 4000 psi	Table 1.D-1 of HOLTEC 2002
f_y = Yield Strength of Reinforcing Steel = 60 ksi	A 706, Grade 60 reinforcing per Sect. 4.2.2.6.2 of the PDC (BSC 2004c)
w_c = Unit Weight of Concrete = 150 pcf	Section 4.2.2.6.6 of the PDC (BSC 2004c)
wcc = Unit Weight of Concrete, Cask = 146 pcf	Table 1.D-1 of HOLTEC 2002
ν_c = Poisson's Ratio = 0.17	Section 4.2.2.6.6 of the PDC (BSC 2004c)
Es = 29000 ksi	Section 4.2.2.6.6 of the PDC (BSC 2004c)

Soil:

f_{ball} = 7.9 ksf	Allowable from figure 11-2 of the supplemental soils report (BSC2004f) for a strip footing of 2ft. depth; use for both static and dynamic loads.
Modulus of Subgrade Reaction: k_s = 1000 kips/cu. ft. (vertical) k_{sh} = 104 kips/cu. ft. (horizontal)	Use the value for a one-ft square plate on alluvium given in table 11-2 of the supplemental soils report (BSC 2004f). These are for static loadings. May be doubled for short term loadings
μ = Coefficient of Interface Friction = 0.81	Table 11-2, alluvium, supplemental soils report (BSC 2004f)

6.5 Computer Software Documentation

The originator used the following computer programs to prepare this calculation; all the software used resides on a Personal Computer:

Program[3]	Version	Use	Software Tracking Number
Word[2]	97 SR-2	Word Processing	N/A – Commercial Off-the-Shelf Software
Mathcad[2]	11.2a	Calculations	N/A – Commercial Off-the-Shelf Software
GT-STRUDL[1]	26	Finite Element Analysis	10829-26-00

Notes:

1. DOE 2003, and its associated verification test report, document the validation of version 26 of GT-STRUDL. The validation included finite element (use of plate elements) and static non-linear analysis (nonlinear springs) problems applicable to the analysis documented in this calculation. Thus, version 26 is valid, qualified software for the performance of this analysis.

2. Microsoft Word, Mathcad are exempted from the qualification and documentation requirements of LP-SI.11Q-BSC, Software Management.

4. The software is operated on a PC system using the Windows 2000 operating system.

7.0 Design Calculations

Slab Design for Flexure and Shear:

Design the slab based on the reactions from the GT-STRUDL analysis. The following design values are obtained from the analysis (see Section A3.1 of Attachment A). They are enveloped reactions from Load Combinations 4 through 9 given in Section 6.3 of this calculation:

SNF Cask Storage Area:

Mxx+, Positive Design Moment (tension in the bottom of the slab; "max" moments from the model) = 1845 ft-kip/ft

Mxx-, Negative Design Moment (tension in the top of the slab; "min" (or negative) moments from the model)
= -78 ft-kip/ft (since the resulting negative moments on pg. A40 have similar magnitudes and signs as the positive design moments, when they should have negative signs and different magnitudes, indicates that there is little tension in the top of the slab; for design (of the reinforcing in the top of the slab), however use the same value as used for the minimum Myy moment as the moments can be dependent on the position of the transporter.)

Myy+, Positive Design Moment = 400 ft-kip/ft

Myy-, Negative Design Moment = -78 ft-kip/ft (see note above for Mxx-)

Vxx, Design Shear (can be based on the + or – shear) = 56 kip/ft

Vyy, Design Shear (can be based on the + or – shear) = 54 kip/ft

Inner Apron Area at the sides of the SNF Cask Storage Areas:

Mxx+, Positive Design Moment = 1600 ft-kip/ft

Mxx-, Negative Design Moment = -50 ft-kip/ft

Myy+, Positive Design Moment = 360 ft-kip/ft

Myy-, Negative Design Moment = -50 ft-kip/ft (use the same value as Mxx-)

Vxx, Design Shear (can be based on the + or – shear) = 64 kip/ft

Vyy, Design Shear (can be based on the + or – shear) = 45 kip/ft

Outer (Sides and Top) Areas:

Mxx+, Positive Design Moment = 600 ft-kip/ft

Mxx-, Negative Design Moment = -50 ft-kip/ft (see above note for Mxx+ for the SNF Cask storage area)

Myy+, Positive Design Moment = 160 ft-kip/ft

Myy-, Negative Design Moment = -60 ft-kip/ft (see above note for Mxx+ for the SNF Cask storage area)

Vxx, Design Shear (can be based on the + or – shear) = 32 kip/ft

Vyy, Design Shear (can be based on the + or – shear) = 30 kip/ft

SNF Cask Storage Area:

Design the slab starting with a seven feet thick slab as analyzed in the GT-STRUDL model, thus:

$h := 7.0 \cdot ft$ $\qquad$ $b := 12 \cdot \frac{in}{ft}$ (unit width of slab)

$d_{7top} := h - \left(2.0 \cdot in + \frac{0.87500 \cdot in}{2}\right)$ $\quad d_{7top} = 6.797\,ft$ based on one layer of #7 bars

$d_{7bot} := h - \left(3.0 \cdot in + \frac{1.410 \cdot in}{2}\right)$ $\quad d_{7bot} = 6.691\,ft$ based on one layer of #11 bars

$d := \min\left(d_{7bot}, d_{7top}\right)$ $\quad d = 6.691\,ft$

$h_3 := 3.0 \cdot ft$ $\; d_{3top} := h_3 - \left(2.0 \cdot in + \frac{0.87500 \cdot in}{2}\right)$ $\quad d_{3top} = 33.563\,in$ based on one layer of #7 bars

$d_{3bot} := h_3 - \left(3 \cdot in + \frac{1.27 \cdot in}{2}\right)$ $\quad d_{3bot} = 32.365\,in$ based on one layer of #10 bars

$d_3 := \min\left(d_{3bot}, d_{3top}\right)$ $\quad d_3 = 2.697\,ft$

Determine the minimum amount of reinforcing required by shrinkage and temperature forces.
Use the subgrade drag equation as given in section 6.3 of ACI 360 (ACI 2001b).

$F := 0.55$ Use coefficient of interface reaction as given in section 6.4 of this calculation.

$L := 52 \cdot ft$ Length between expansion joints; use the length of a storage area for 8 casks.

$w := w_c \cdot h$ $\quad w = 1.05 \times 10^3\,psf$ Weight per area of slab.

$w_3 := w_c \cdot h_3$ $\quad w_3 = 450\,psf$

$f_y := 60000 \cdot psi$ Yield strength of reinforcing steel per section 6.4 of this calculation.

$f_s := \left(\frac{2}{3}\right)\cdot f_y$ $\quad f_s = 40000\,\text{psi}$ Estimated actual stress in the reinforcing steel; see section 6.3 of ACI 360 (ACI 2001b).

$A_s := \frac{(F\cdot L\cdot w)}{2\cdot f_s}$ $\quad A_s = 0.375\,\frac{\text{in}^2}{\text{ft}}$ Required area of reinforcing steel per formula 6.3 of ACI 360 (ACI 2001b)

$A_{s3} := \frac{\left(F\cdot L\cdot w_3\right)}{2\cdot f_s}$ $\quad A_{s3} = 0.161\,\frac{\text{in}^2}{\text{ft}}$

Use #6 @ 12 in. oc to provide 0.44 in^2 x (12in/ft/12in) = 0.44 in^2/ft for the 7 ft. thick areas and #4 bars at 12 in oc to provide 0.20 in^2/ft for the 3 ft. slabs (see Table A-1, Appendix A of MacGregor (MacGregor 1997) for the area of a bar). Based on this, ρ_{min} is calculated as:

$$\rho_{min7a} := \frac{\left(0.44\cdot \text{in}^2\right)\cdot\frac{12\cdot\frac{\text{in}}{\text{ft}}}{12\cdot \text{in}}}{b\cdot d} \qquad \rho_{min7a} = 0.000457$$

$$\rho_{min3a} := \frac{\left(0.20\cdot \text{in}^2\right)\cdot\frac{12\cdot\frac{\text{in}}{\text{ft}}}{12\cdot \text{in}}}{b\cdot d_3} \qquad \rho_{min3a} = 0.000515$$

Evaluate Minimum Reinforcement Requirements per the ACI 349 Code:
Evaluate minimum reinforcement requirements per sections 7.12.2, 7.12.3, and 7.12.5 of ACI 349 (ACI 2001a); concrete cover requirements are taken from Section 7.7.1 of ACI 349; reinforcing steel bar areas and diameters are taken from Table A-1, Appendix A of MacGregor (MacGregor 1997) :

7 feet thick SNF Storage Pad Area and Inner Apron Area:
Check top reinforcement - #6 @ 12" (min. bar required per 7.12.3 is #6):

$f_{tc} := 7.5\sqrt{f_c\cdot \text{psi}^{-1}}\cdot\text{psi}$ $\quad f_{tc} = 530.33\,\text{psi}$ Tensile strength of concrete; use modulus of rupture as computed by formula 9-9 of ACI 349 (ACI 2001a).

$f_s := 0.60\cdot f_y$ $\quad f_s = 36000\,\text{psi}$ Stress in reinforcement; take as 60% of the yield strength per Section 7.12.3 of ACI 349 (ACI 2001a).

$c := 2.00\cdot \text{in}$ Concrete cover for concrete exposed to weather per Section 7.7.1 of ACI 349 (ACI 2001a) (used minimum required cover for a #6 bar):

$s := 12 \cdot in$ Spacing of bars.

$A := 2 \cdot \left[c + \frac{(0.75 \cdot in)}{2} \right] \cdot s$ $A = 57\,in^2$ Effective tensile area of concrete associated with the bars; see definition in Section 7.0 of ACI 349 (ACI 2001a) (based on a #6 bar with 2" cover).

use: $A_{smin} := \min\left[\left[\frac{(f_{tc} \cdot A)}{f_s} \right], \frac{A}{100} \right]$ $A_{smin} = 0.57\,in^2$ See Section 7.12.3 of ACI 349 (ACI 2001a)

$A_{sprov} := 0.44 \cdot in^2 <$ $A_{smin} = 0.57\,in^2$ NG

Try #7@12" oc:

$A_{sprov} := 0.60 \cdot in^2$ (bar area provided within a concrete tensile area that is based on a 12" spacing of the bars)

OK; this also satisfies the requirement for at least #6 bars as the minimum bar size for concrete sections in Section 7.12.3 of ACI 349 (ACI 2001a).

Check bottom reinforcement (tensile face) - #10@10" oc

$\rho_{min} := 0.0018$ Min. ratio per Section 7.12.5, ACI 349 (ACI 2001a).

$d_{10bot} := 7 \cdot ft - \left[3 \cdot in + \left(\frac{1.27 \cdot in}{2} \right) \right]$ $d_{10bot} = 80.365\,in$

$\rho_{prov} := \frac{1.27 \cdot in^2 \cdot 12 \cdot \frac{in}{ft}}{10 \cdot in \cdot b \cdot d_{10bot}}$ $\rho_{prov} = 0.00158$ $<$ $\rho_{min} = 0.0018$ NG

Try #10@8" oc.

$\rho_{prov} := \frac{1.27 \cdot in^2 \cdot 12 \cdot \frac{in}{ft}}{8 \cdot in \cdot b \cdot d_{10bot}}$ $\rho_{prov} = 0.001975$ $>$ $\rho_{min} = 0.0018$ **OK, Governs**

3 feet thick Apron Areas:
Check top reinforcement - #6@12" oc:

$\rho_{min} := 0.0012$ min ratio per Section 7.12.2 of ACI 349 (ACI 2001a).

$$\rho_{prov} := \frac{\left[\left(0.44\cdot in^2\right)\cdot 12\cdot\frac{in}{ft}\right]}{12\cdot in\cdot b\cdot d_{3top}} \qquad \rho_{prov} = 0.001076 \quad < \quad \rho_{min} = 0.0012 \qquad \text{NG}$$

Try #7@12" oc:

$$\rho_{prov} := \frac{\left[\left(0.60\cdot in^2\right)\cdot 12\cdot\frac{in}{ft}\right]}{12\cdot in\cdot b\cdot d_{3top}}$$

$\rho_{prov} = 0.001468 \quad > \quad \rho_{min} = 0.0012$ **OK, Governs**

Check bottom reinforcement (tensile face) - #8@12" oc

$\rho_{min} := 0.0018$ Min. ratio per Section 7.12.5, ACI 349 (ACI 2001a).

$$\rho_{prov} := \frac{0.79\cdot in^2\cdot 12\cdot\frac{in}{ft}}{12\cdot in\cdot b\cdot d_{3bot}} \qquad \rho_{prov} = 0.002034 \quad > \quad \rho_{min} = 0.0018 \qquad \textbf{OK}$$

Check shear - compute allowable using formula 11-3 of ACI 349 (ACI 2001a):
7.0 Ft Thick Areas:

$\phi_v := 0.85$ Strength reduction factor for shear per section 9.3.2.3 of ACI 349 (ACI 2001a).

$$\phi V_c := \phi_v\cdot 2\cdot\sqrt{\left(f_c\cdot psi^{-1}\right)}\cdot psi\cdot b\cdot d \qquad \phi V_c = 115.8\frac{kip}{ft} \quad > \quad V_u := 64\cdot\frac{kip}{ft} \qquad \textbf{OK}$$

3.0 Ft Thick Aprons:

$$\phi V_{c3} := \phi_v\cdot 2\cdot\sqrt{\left(f_c\cdot psi^{-1}\right)}\cdot psi\cdot b\cdot d_3 \qquad \phi V_{c3} = 46.7\frac{kip}{ft} \quad > \quad V_{u3} := 40\cdot\frac{kip}{ft} \qquad \textbf{OK}$$

Check flexure:
SNF Cask Storage Area:

$\phi_b := 0.90$ Strength reduction factor for flexure per section 9.3.2.2 of ACI 349 (ACI 2001a).

Positive x moment: $M_{uxpos} := 1845 \cdot ft \cdot \frac{kip}{ft}$

$A_s := 1.56 \cdot in^2 \cdot \frac{\left(12 \cdot \frac{in}{ft}\right)}{6 \cdot in}$ Try #11@6 in.

$a := \frac{(A_s \cdot f_y)}{0.85 \cdot f_c \cdot b}$ $a = 3.671\, in$ Formula 4-11, MacGregor 1997

$\phi M_n := \phi_b \cdot \left[A_s \cdot f_y \cdot \left(d - \frac{a}{2}\right)\right]$ Formula 4-12b, MacGregor 1997

$\phi M_n = 1102 \frac{(ft \cdot kip)}{ft} < M_{uxpos} = 1845\, ft \cdot \frac{kip}{ft}$ NG

Try a double layer of reinforcing steel, thus:

Recheck flexure:

$A_s := 2 \cdot 1.56 \cdot in^2 \cdot \frac{\left(12 \cdot \frac{in}{ft}\right)}{7 \cdot in}$ **Try 2 layers of #11@7 in.**

$a := \frac{(A_s \cdot f_y)}{0.85 \cdot f_c \cdot b}$ $a = 6.292\, in$ Formula 4-11, MacGregor 1997

$\phi M_n := \phi_b \cdot \left[A_s \cdot f_y \cdot \left(d - \frac{a}{2}\right)\right]$ Formula 4-12b, MacGregor 1997

$\phi M_n = 1857 \frac{(ft \cdot kip)}{ft} > M_{uxpos} = 1845\, ft \cdot \frac{kip}{ft}$ **OK**

Positive y moment: $M_{uy} := 400 \cdot ft \cdot \frac{kip}{ft}$

$A_{sy} := 1.27 \cdot in^2 \cdot \frac{\left(12 \cdot \frac{in}{ft}\right)}{8 \cdot in}$ **Try 1 layer of #10@8" oc.; min. required reinforcing per ACI 349; see calculations above.**

$ay := \frac{\left(A_{sy} \cdot f_y\right)}{0.85 \cdot f_c \cdot b}$ $ay = 2.241\,in$ Formula 4-11, MacGregor 1997

$\phi M_{ny} := \phi_b \cdot \left[A_{sy} \cdot f_y \cdot \left(d - \frac{ay}{2}\right)\right]$ Formula 4-12b, MacGregor 1997

$\phi M_{ny} = 679 \frac{(ft \cdot kip)}{ft}$ $>$ $M_{uy} = 400 \frac{ft \cdot kip}{ft}$ **OK**

Negative x & y moment: $M_{uyneg} := 78 \cdot ft \cdot \frac{kip}{ft}$

$A_{syb} := 0.60 \cdot in^2 \cdot \frac{\left(12 \cdot \frac{in}{ft}\right)}{12 \cdot in}$ **Try the min required reinforcement, i. e. 1 layer of #7@12 in.**

$ayb := \frac{\left(A_{syb} \cdot f_y\right)}{0.85 \cdot f_c \cdot b}$ $ayb = 0.706\,in$ Formula 4-11, MacGregor 1997

$\phi M_{nyneg} := \phi_b \cdot \left[A_{syb} \cdot f_y \cdot \left(d - \frac{ayb}{2}\right)\right]$ Formula 4-12b, MacGregor 1997

$\phi M_{nyneg} = 216 \frac{(ft \cdot kip)}{ft} >$ $M_{uyneg} = 78\,ft \cdot \frac{kip}{ft}$ **OK**

Inner Apron Area:

Positive x moment: $M_{uxposa} := 1600\text{ft}\cdot\frac{\text{kip}}{\text{ft}}$

$A_{sa} := 2\cdot 1.56\cdot\text{in}^2\cdot\frac{\left(12\cdot\frac{\text{in}}{\text{ft}}\right)}{7\cdot\text{in}}$ **Try 2 layers of #11@7" oc.**

$a_a := \frac{\left(A_{sa}\cdot f_y\right)}{0.85\cdot f_c\cdot b}$ $a_a = 6.292\,\text{in}$ Formula 4-11, MacGregor 1997

$\phi M_{na} := \phi_b\cdot\left[A_{sa}\cdot f_y\cdot\left(d - \frac{a_a}{2}\right)\right]$ Formula 4-12b, MacGregor 1997

$\phi M_{na} = 1857\frac{(\text{ft}\cdot\text{kip})}{\text{ft}} > M_{uxposa} = 1600\frac{\text{ft}\cdot\text{kip}}{\text{ft}}$ **OK**

Positive y moment: $M_{uy} := 360\cdot\text{ft}\cdot\frac{\text{kip}}{\text{ft}}$

$A_{say} := 1.27\cdot\text{in}^2\cdot\frac{\left(12\cdot\frac{\text{in}}{\text{ft}}\right)}{8\cdot\text{in}}$ **Try 1 layer of #10@8" oc.; min. required reinforcing per ACI 349; see calculations above.**

$a_{ay} := \frac{\left(A_{say}\cdot f_y\right)}{0.85\cdot f_c\cdot b}$ $a_{ay} = 2.241\,\text{in}$ Formula 4-11, MacGregor 1997

$\phi M_{nay} := \phi_b\cdot\left[A_{say}\cdot f_y\cdot\left(d - \frac{a_{ay}}{2}\right)\right]$ Formula 4-12b, MacGregor 1997

$\phi M_{nay} = 679\frac{(\text{ft}\cdot\text{kip})}{\text{ft}} > M_{uy} = 360\frac{\text{ft}\cdot\text{kip}}{\text{ft}}$ **OK**

Shrinkage and temperature reinforcing (#7@12" oc) will be sufficient to resist the low negative moments this area of the slab may see.

Top Apron - SNF Cask Storage Area

Look at flexure:

Positive x moment: $M_{uxposa2} := 800\text{ft}\cdot\frac{\text{kip}}{\text{ft}}$

$A_{sa2} := 2\cdot 1.56\cdot\text{in}^2\cdot\frac{\left(12\cdot\frac{\text{in}}{\text{ft}}\right)}{6\cdot\text{in}}$ **Try 2 layers of #11@6" oc.**

$a_{a2} := \frac{\left(A_{sa2}\cdot f_y\right)}{0.85\cdot f_c\cdot b}$ $a_{a2} = 7.341\,\text{in}$ Formula 4-11, MacGregor 1997

$\phi M_{na2} := \phi_b\cdot\left[A_{sa2}\cdot f_y\cdot\left(d_{3bot}-\frac{a_{a2}}{2}\right)\right]$ Formula 4-12b, MacGregor 1997

$\phi M_{na2} = 806\frac{(\text{ft}\cdot\text{kip})}{\text{ft}} >$ $M_{uxposa2} = 800\frac{\text{ft}\cdot\text{kip}}{\text{ft}}$ **OK**

Positive y moment: $M_{uya2} := 240\cdot\text{ft}\cdot\frac{\text{kip}}{\text{ft}}$

$A_{say2} := 1.27\cdot\text{in}^2\cdot\frac{\left(12\cdot\frac{\text{in}}{\text{ft}}\right)}{8\cdot\text{in}}$ **Try 1 layer of #10@8" oc.**

$a_{ay2} := \frac{\left(A_{say2}\cdot f_y\right)}{0.85\cdot f_c\cdot b}$ $a_{ay2} = 2.241\,\text{in}$ Formula 4-11, MacGregor 1997

$\phi M_{nay2} := \phi_b\cdot\left[A_{say2}\cdot f_y\cdot\left(d_{3bot}-\frac{a_{ay2}}{2}\right)\right]$ Formula 4-12b, MacGregor 1997

$\phi M_{nay2} = 268\,\text{ft}\cdot\frac{\text{kip}}{\text{ft}}$ $>$ $M_{uya2} = 240\,\text{ft}\cdot\frac{\text{kip}}{\text{ft}}$ **OK**

Top and Side Outer Apron Areas:

Look at flexure:

Positive x moment: $M_{uxposa3} := 600ft\cdot\frac{kip}{ft}$

$A_{sa3} := 2\cdot 1.27\cdot in^2\cdot\frac{\left(12\cdot\frac{in}{ft}\right)}{6\cdot in}$ **Try 2 layer of #10@6" oc.**

$a_{a3} := \frac{\left(A_{sa3}\cdot f_y\right)}{0.85\cdot f_c\cdot b}$ $a_{a3} = 5.976in$ Formula 4-11, MacGregor 1997

$\phi M_{na3} := \phi_b\cdot\left[A_{sa3}\cdot f_y\cdot\left(d_{3bot} - \frac{a_{a3}}{2}\right)\right]$ Formula 4-12b, MacGregor 1997

$\phi M_{na3} = 672\frac{(ft\cdot kip)}{ft} >$ $M_{uxposa3} = 600\frac{ft\cdot kip}{ft}$ **OK**

Positive y moment: $M_{uya3} := 160\cdot ft\cdot\frac{kip}{ft}$

$A_{say3} := 1.27\cdot in^2\cdot\frac{\left(12\cdot\frac{in}{ft}\right)}{12\cdot in}$ **Try 1 layer of #10@12" oc.**

$a_{a3} := \frac{\left(A_{sa3}\cdot f_y\right)}{0.85\cdot f_c\cdot b}$ $a_{a3} = 5.976in$ Formula 4-11, MacGregor 1997

$\phi M_{nay3} := \phi_b\cdot\left[A_{say3}\cdot f_y\cdot\left(d_{3bot} - \frac{a_{a3}}{2}\right)\right]$ Formula 4-12b, MacGregor 1997

$\phi M_{nay3} = 168\,ft\cdot\frac{kip}{ft}$ $>$ $M_{uya3} = 160\,ft\cdot\frac{kip}{ft}$ **OK**

Negative y moment (use for design in the negative x direction as well): $M_{uynega4} := 60\text{ft}\cdot\frac{\text{kip}}{\text{ft}}$

$$A_{sa4} := 0.60\cdot\text{in}^2\cdot\frac{\left(12\cdot\frac{\text{in}}{\text{ft}}\right)}{12\cdot\text{in}}$$

Try required shrinkage and temperature reinforcement, i.e.1 layer of #7@12" oc.

$$a_{a4} := \frac{\left(A_{sa4}\cdot f_y\right)}{0.85\cdot f_c\cdot b} \qquad a_{a4} = 0.706\,\text{in}$$

Formula 4-11, MacGregor 1997

$$\phi M_{na4} := \phi_b\cdot\left[A_{sa4}\cdot f_y\cdot\left(d_{3top} - \frac{a_{a4}}{2}\right)\right]$$

Formula 4-12b, MacGregor 1997

$$\phi M_{na4} = 91\frac{(\text{ft}\cdot\text{kip})}{\text{ft}} > \qquad M_{uynega4} = 60\frac{\text{ft}\cdot\text{kip}}{\text{ft}} \qquad \textbf{OK}$$

Summary for Flexure and Shear:

All areas meet shear and flexure requirements. As documented in the preceding calculations, the reinforcing scheme depends on the area of the Aging Pad. The figure below presents a summary of this scheme.

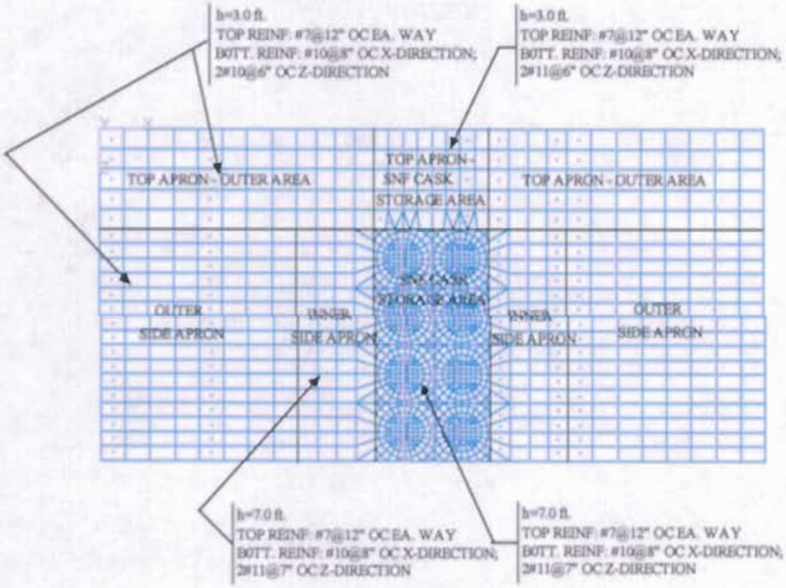

PAD REINFORCING LAYOUT

Soil Bearing Stresses and Stability:

Soil bearing is investigated by dividing the maximum spring reactions in the y direction by the plate element area associated with that spring type as used in Section A1.1 in developing the spring stiffness curves. This is performed below:

Service Loads:

$R_{bs} := 27.36 \cdot kip$ Spring Element 11347, load combination COMBS10 - D + Sn + L(loaded 1) + Wx, from pg. A47 Section A3.0 of this calculation.

$B := \sqrt{\frac{(B_{2a} \cdot B_{2b})}{200}}$ Spring Element 11347 is at the lower edge of the inner apron area, as determined on pg. A10 of Section A1.1 of this calculation.

$B = 4.015 \, ft$

$A_s := \frac{B^2}{2}$ $A_s = 8.06 \, ft^2$ 1/2 the area used since element 11347 is at the lower edge.

$f_{bs} := \frac{R_{bs}}{A_s}$ $f_{bs} = 3.395 \, ksf$ $<$ $f_{ball} := 7.9 \cdot ksf$ **OK, allowable bearing pressure from Section 6.4 of this calculation.**

Extreme, or ultimate, load cases:

$R_{bu} := 37.48 \cdot kip$ Spring Element 11347, Load COMBU13 - D + L(loaded 2) + 0.4EQX + EQY(down) + 0.4EQZ , from pg. A48 of Section A3.0 of this calculation.

$f_{bu} := \frac{R_{bu}}{A_s}$ $f_{bu} = 4.65 \, ksf$ $<$ $f_{ballu} := 7.9 \cdot ksi$ **OK, allowable bearing pressure from Section 6.4 of this calculation.**

Sliding:

The factor of safety for sliding is determined by first multiplying the total reaction due to the dead weight, minus the upward seismic force, by the coefficient of soil friction, μ, (the max lateral resistance of the soil) and dividing this by the applied lateral load. This is compared to the allowable values given in Section II.5 of SRP 3.8.5 of NUREG 0800. These are 1.5 for Service Loads and 1.1 for Extreme Loads. Looking at the results for the summation of reactions on pgs. A48 of Section A3.0 of this calculation shows the extreme load cases govern, thus only they are evaluated below. The results for the extreme cases show that cases COMBU20, 0.9D + EQX + 0.4EQY(up) + 0.4EQZ, COMBU21, 0.9D + 0.4EQX + 0.4EQY(up) + EQZ, and COMBU22, 0.9D + 0.4EQX + EQY(up) + 0.4EQZ are critical. These are evaluated below:

COMBU20:

$\mu := 0.81$ Coefficient of soil friction; see Section 6.4 of this calculation.

$$FS := \frac{\mu \cdot 7047}{\sqrt{\left(7115^2 + 3030^2\right)}} \qquad FS = 0.738 < \quad FS_{all} := 1.1$$

COMBU21:

$$FS := \frac{\mu \cdot 6713}{\sqrt{\left(2846^2 + 7576^2\right)}} \qquad FS = 0.672 < \quad FS_{all} := 1.1$$

COMBU22:

$$FS := \frac{\mu \cdot 3879}{\sqrt{\left(2846^2 + 3030^2\right)}} \qquad FS = 0.756 \; < \quad FS_{all} := 1.1$$

The lateral forces for these load combinations may violate the stability requirements (these calculations are very conservative as they do not include the effects of passive soil pressures action on the sides of the pad are ignored). To confirm stability, therefore, evaluate the potential sliding displacements. See the discussion below.

Evaluate Potential Sliding Utilizing the Rigid Body Approach:
Utilize the procedures for analysis of the sliding of rigid bodies in Appendix B of the Seismic Analysis and Design Approach Document (BSC 2004d) to determine the potential sliding displacements.

$\mu_e := \mu \cdot \left(1 - 0.4 \cdot \alpha_V\right) \qquad \mu_e = 0.577$ Effective coefficient of friction per Eq. B.2-1 of BSC 2004d

$c_s := 2 \cdot \mu_e \cdot g \qquad c_s = 37.111 \frac{ft}{sec^2}$ Sliding coefficient per Eq. B.2-4 of BSC 2004d

$$SA_{VH} = \left(1.16 \cdot SA_H{}^2\right)^{0.5} \qquad SA_{VH} = 1.077 \cdot SA_H$$

$$SA_{VH} = c_s$$

Determination of the vectral horizontal spectral acceleration from Eq. B2.8 of BSC 2004b when both horizontal 7% damped spectral accelerations, $SA_{H,}$ are the same.

Therefore, $SA_H := \frac{c_s}{1.077} \qquad SA_H = 34.458 \frac{ft}{sec^2} \qquad SA_H = 1.071\,g$

Extrapolating in the table for the Horizontal Spectra in MO0402SDSTMHIS.004 gives the following period:

$$T := 0.050\text{sec} + \left(\frac{1.0710 - 1.0399}{1.0854 - 1.0399}\right)\cdot 0.01\cdot\text{sec} \qquad T = 0.0568\,\text{sec}$$

$$f_{es} := \frac{1}{T} \qquad f_{es} = 17.595\,\text{Hz}$$

Per Appendix B2 of BSC 2004d, f_{es} is the effective frequency of the equivalent sliding system of the rigid body; it is equal to the lowest natural frequency at which the 7% damped vector spectral acceleration SA_{VH} equals $c_{s.}$

Therefore, $\delta_s := \frac{c_s}{(2\cdot\pi\cdot f_{es})^2}$ $\qquad \delta_s = 0.036\,\text{in}$

See Eq. B2-7 of BSC 2004d. **This is a very low displacement. The slab will be stable with respect to sliding.**

Overturning:

The pad is stable with respect to overturning because the resulting soil pressures are so low, and these are based on a model that includes the overturning moments.

8.0 Conclusions

Summary for Flexure and Shear:

All areas meet the design shear and flexure requirements. The design and analytical results are reasonable for their intended use considering the high loads the slab is designed to. They are suitable for their intended use, namely the design of a large slab on grade for use as a storage area for SNF and HLW storage casks. Reinforcing bar spacings and sizes will be optimized during final design to facilitate construction. As documented in the calculations, the reinforcing scheme depends on the different regions of the Aging Pad. The figure below presents a summary of this scheme.

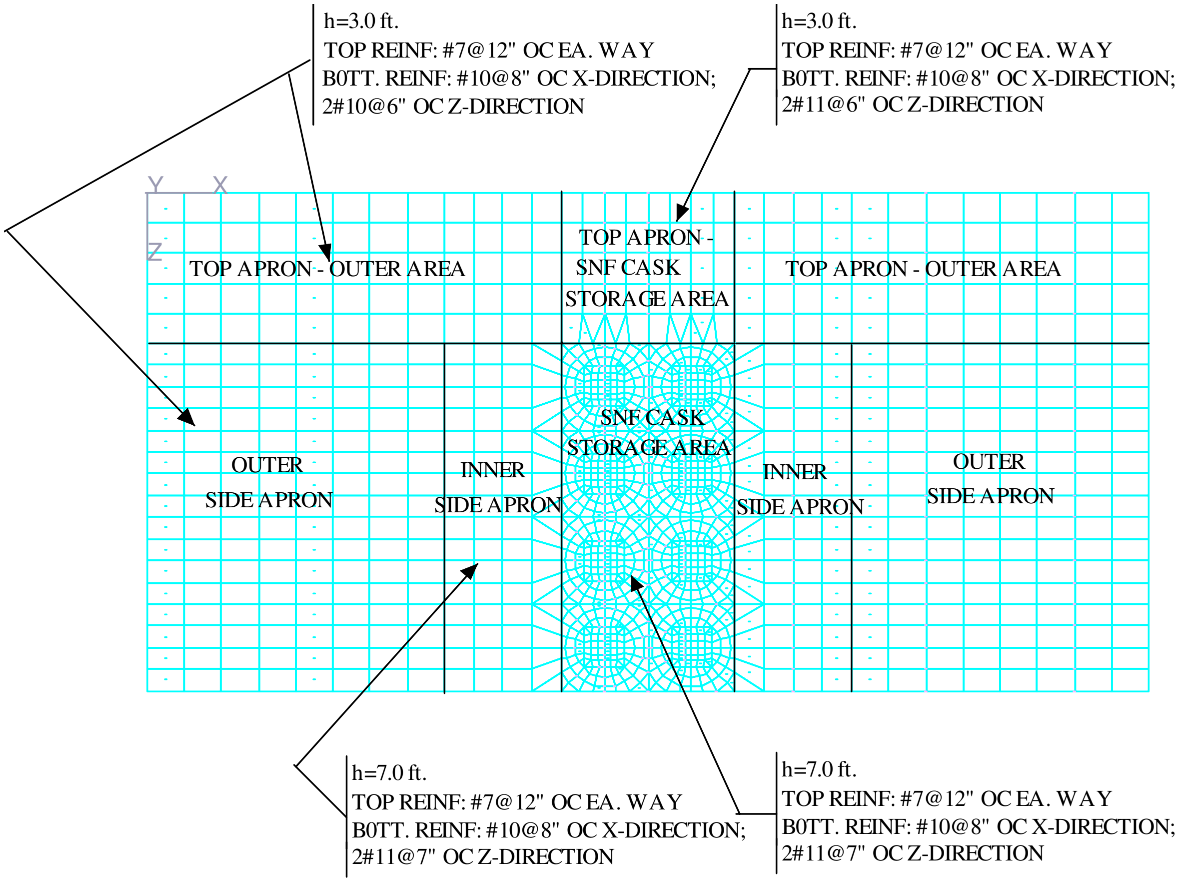

h=3.0 ft.
TOP REINF: #7@12" OC EA. WAY
B0TT. REINF: #10@8" OC X-DIRECTION;
2#10@6" OC Z-DIRECTION

h=3.0 ft.
TOP REINF: #7@12" OC EA. WAY
B0TT. REINF: #10@8" OC X-DIRECTION;
2#11@6" OC Z-DIRECTION

h=7.0 ft.
TOP REINF: #7@12" OC EA. WAY
B0TT. REINF: #10@8" OC X-DIRECTION;
2#11@7" OC Z-DIRECTION

h=7.0 ft.
TOP REINF: #7@12" OC EA. WAY
B0TT. REINF: #10@8" OC X-DIRECTION;
2#11@7" OC Z-DIRECTION

PAD REINFORCING LAYOUT

Soil Bearing Stresses and Stability:
Soil bearing stresses are well below the allowable values. The aging pad should not experience overturning or soil failures.

Stability with respect to sliding is acceptable as well . Even though the sliding safety of factor of 1.1 for earthquake loads is not met, an evaluation of sliding using a rigid body analysis shows the pad would only move about 0.036 inches, which indicates that sliding is negligible and won't adversely affect the structural performance of the aging pad. Also, in the evaluation of sliding, the effects of passive soil pressures acting at the edges of the slabs are not considered. These effects would provide more resistance to sliding than has been utilized in this calculation.

The results of the soil bearing stress and stability evaluations are reasonable compared to the size of the slab being designed and the high loads to which it is designed. They are suitable for their intended use, namely the design and evaluation of a large slab for the storage of SNF and HLW storage casks.

9.0 Computer Files

The following computer files were developed as the documentation of the analysis and design of the Aging Pad:

AGING PAD REVBX 7FT.gti
AGING PAD REVBX 7FT.gto
AGING PAD REVBX 7FT.gts
Slab Design Rev BX 7FT.mcd
CALCAgingRevBX.doc
Cask Nodes Rev BX.prn

Attachment A – GT-STRUDL Model and Anchorage Design

A 1.1 Input Parameters to the GT-STRUDL Model

Determine Input Parameters for the GT-STRUDL Model:

The base slab is modeled as a plate structure that is 150 ft. wide and 74.5 ft. long. The model simulates the storage area for 8 storage casks.

Set the Origin of Matrices to 1,1:

ORIGIN := 1

Define Non-Standard Units:

$\text{kip} := 1000\cdot\text{lbf}$ $\quad \text{ksi} := \dfrac{\text{kip}}{\text{in}^2}$ $\quad \text{ksf} := \dfrac{\text{kip}}{\text{ft}^2}$ $\quad \text{TON} := 2\cdot\text{kip}$

$\text{pcf} := \dfrac{\text{lbf}}{\text{ft}^3}$ $\quad \text{psf} := \dfrac{\text{lbf}}{\text{ft}^2}$ $\quad \text{TSF} := \dfrac{\text{TON}}{\text{ft}^2}$ $\quad \text{TCF} := \dfrac{\text{TON}}{\text{ft}^3}$

Determine concrete material properties for input into GT-STRUDL:

$f_c := 5000\cdot\text{psi}$ $\quad w_c := 150\cdot\text{pcf}$ — Concrete compressive strength and unit weight; see section 6.4 of this calculation.

$$E_c := \left(w_c\cdot\text{pcf}^{-1}\right)^{1.5}\cdot 33\cdot\sqrt{\left[f_c\cdot\left(\text{psi}^{-1}\right)\right]}\cdot\text{psi}$$

See section 8.5.1 of ACI 349 (ACI 2001) for Young's Modulus

$E_c = 4287\,\text{ksi}$

$\nu_c := 0.17$ — Poisson's ratio; see section 6.4 of this calculation.

$G_c := \dfrac{E_c}{2\cdot\left(1+\nu_c\right)}$ $\quad G_c = 1832\,\text{ksi}$ — Modulus of Rigidity; see formula 14, pg. 86 of Roark (Young 1989)

Area of Aging Pad to be Modeled in GT-STRUDL:

The storage pad is modeled on the 1000 MTHM pad shown on the sketch in Attachment 2, sht. 1, of Calc.170-C0C-C000-00100-000-00A (BSC 2004a). The storage area for the vertical casks consists a thick reinforced concrete pad of dimensions 518'-11 1/2" by 61'-0" with two rows of casks at a 13'-0" pitch in both directions. The pad also has 44.5 feet apron areas for access by the cask transporter vehicle at the sides and approximately 22.5 feet apron at the top. The apron areas will be thinner than the cask storage area. The area to be modeled is shown below:

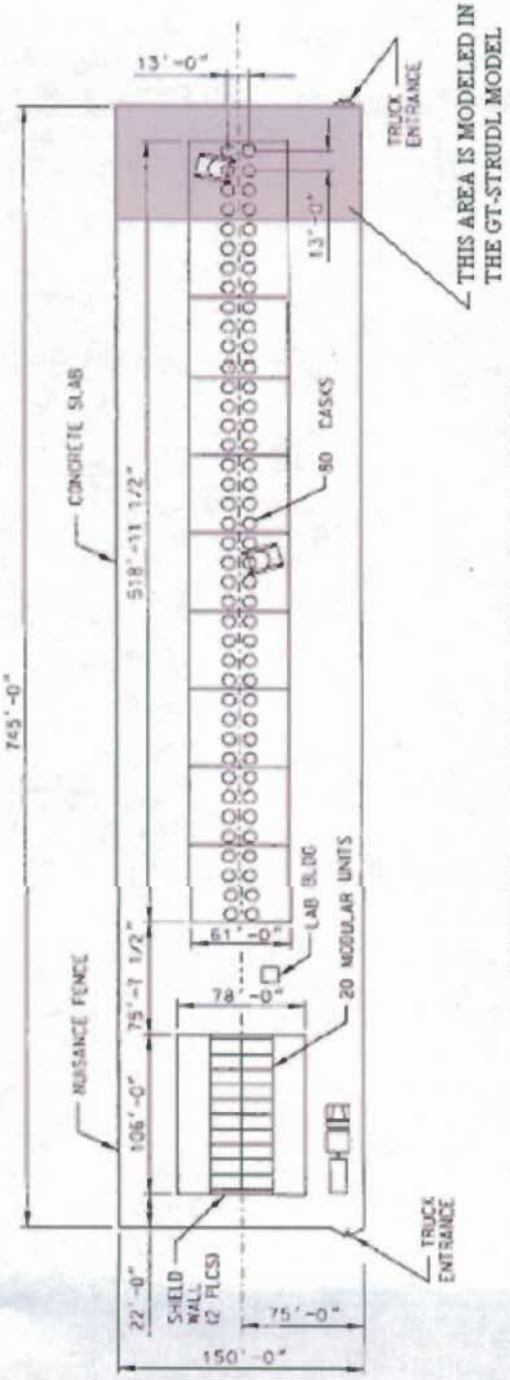

SKETCH - LAYOUT FOR 1000 MTHM

Determine the Location of the Nodes in the first quadrant of the mesh in the pad area under the casks; see the figure below:

$\Delta := \frac{13.0}{4} \cdot ft$ $\quad \Delta = 3.25\,ft$

$\Delta_{in} := 1 \cdot ft$ Grid Spacing of Nodes at Center of Cask Storage Area (Nodes 9 - 18 and 21-24)

$D := \left(11 + \frac{10.5}{12}\right) \cdot ft$ Approximate diameter of Cask Anchor Bolt Circle to use in locating nodes 5-8 and 20

$D = 11.875\,ft$

$B := 13 \cdot ft$

$Mid := \frac{\left[\left(\frac{D}{2}\right) + 3 \cdot ft\right]}{2}$ $\quad Mid = 4.469\,ft$

Basic Grid Spacing

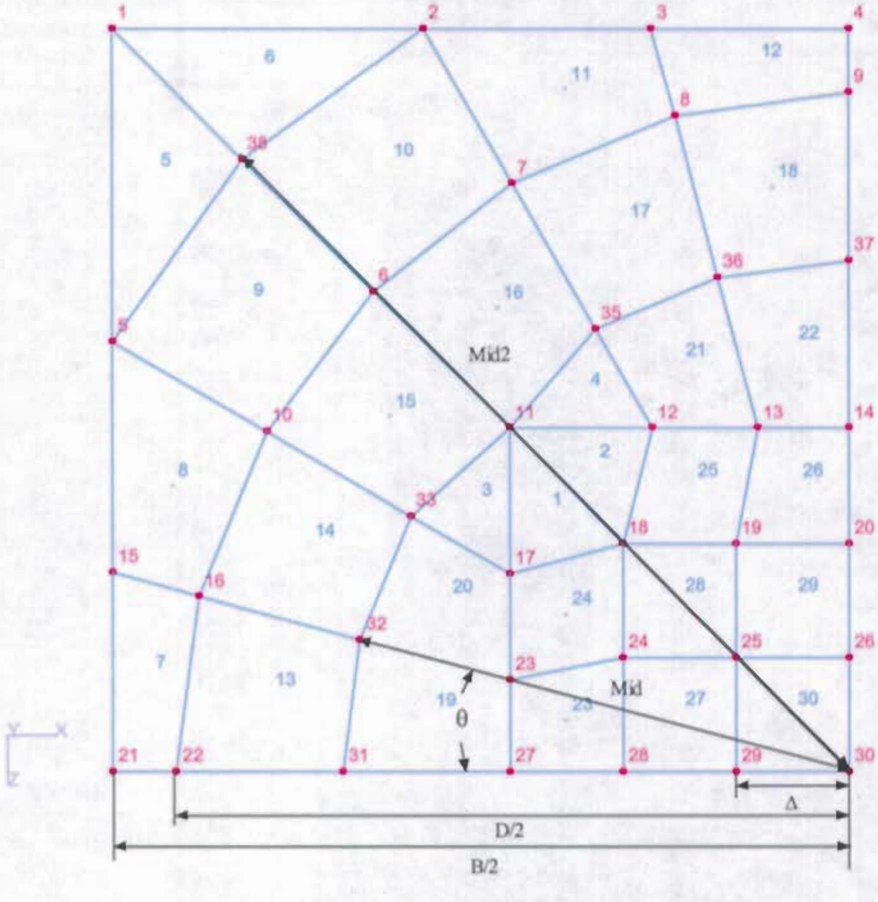

FIRST QUADRANT - NODES AND ELEMENTS

$Mid2 := \frac{\left[\left[\sqrt{2\left(\frac{B}{2}\right)^2}\right] + \frac{D}{2}\right]}{2}$ $\quad Mid2 = 7.565\,ft$

$\theta := \frac{(360 \cdot deg)}{24}$ $\quad \theta = 15\,deg$

Angle between the horizontal and a radial line through node 4 or the angle between the vertical and a radial line through node 2

$X_c := 68.5 \cdot ft$

$Z_c := 29.0 \cdot ft$

Location of the center point of the first cask storage area.

Set up initial mesh of nodal points:

First Quadrant:

$ma := 1$

$k := 37$ Number of nodes in first quadrant

$i := 1..k$

$NN_{i,1} := i$ Column of nodal point numbers

$NN_{i,3} := 0.0$ Y axis location of all nodes is 0.0 ft

$$NN_{1,2} := \left(X_c - \frac{B}{2}\right)\cdot ft^{-1} \qquad NN_{1,4} := \left(Z_c - \frac{B}{2}\right)\cdot ft^{-1}$$

$$NN_{2,2} := \left(X_c - \frac{B}{2}\cdot \tan(2\cdot\theta)\right)\cdot ft^{-1} \qquad NN_{2,4} := \left(Z_c - \frac{B}{2}\right)\cdot ft^{-1}$$

$$NN_{3,2} := \left(X_c - \frac{B}{2}\cdot \tan(\theta)\right)\cdot ft^{-1} \qquad NN_{3,4} := \left(Z_c - \frac{B}{2}\right)\cdot ft^{-1}$$

$$NN_{4,2} := \left(X_c\right)\cdot ft^{-1} \qquad NN_{4,4} := \left(Z_c - \frac{B}{2}\right)\cdot ft^{-1}$$

$$NN_{5,2} := \left(X_c - \frac{B}{2}\right)\cdot ft^{-1} \qquad NN_{5,4} := \left[Z_c - \left(\frac{B}{2}\right)\cdot \tan(2\cdot\theta)\right]\cdot ft^{-1}$$

$$NN_{6,2} := \left[X_c - \left(\frac{D}{2}\right)\cdot \cos(3\cdot\theta)\right]\cdot ft^{-1} \qquad NN_{6,4} := \left[Z_c - \left(\frac{D}{2}\right)\cdot \sin(3\cdot\theta)\right]\cdot ft^{-1}$$

$$NN_{7,2} := \left[X_c - \left(\frac{D}{2}\right)\cdot \sin(2\cdot\theta)\right]\cdot ft^{-1} \qquad NN_{7,4} := \left[Z_c - \left(\frac{D}{2}\right)\cdot \cos(2\cdot\theta)\right]\cdot ft^{-1}$$

$$NN_{8,2} := \left[X_c - \left(\frac{D}{2}\right)\cdot \sin(\theta)\right]\cdot ft^{-1} \qquad NN_{8,4} := \left[Z_c - \left(\frac{D}{2}\right)\cdot \cos(\theta)\right]\cdot ft^{-1}$$

$$NN_{9,2} := \left(X_c\right)\cdot ft^{-1} \qquad NN_{9,4} := \left(Z_c - \frac{D}{2}\right)\cdot ft^{-1} \qquad \frac{D}{2} = 5.938\,ft$$

$$NN_{10,2} := \left[X_c - \left(\frac{D}{2}\right)\cdot\cos(2\cdot\theta)\right]\cdot ft^{-1} \qquad NN_{10,4} := \left[Z_c - \left(\frac{D}{2}\right)\cdot\sin(2\cdot\theta)\right]\cdot ft^{-1} \qquad \sin(2\cdot\theta) = 0.5$$

$$\cos(2\cdot\theta) = 0.866$$

$$NN_{11,2} := \left(X_c - 3\cdot ft\right)\cdot ft^{-1} \qquad NN_{11,4} := \left(Z_c - 3\cdot ft\right)\cdot ft^{-1}$$

$$NN_{12,2} := \left(X_c - 3\cdot\tan(2\cdot\theta)\cdot ft\right)\cdot ft^{-1} \qquad NN_{12,4} := \left(Z_c - 3\cdot ft\right)\cdot ft^{-1}$$

$$NN_{13,2} := \left(X_c - 3\cdot\tan(\theta)\cdot ft\right)\cdot ft^{-1} \qquad NN_{13,4} := \left(Z_c - 3\cdot ft\right)\cdot ft^{-1}$$

$$NN_{14,2} := \left(X_c\right)\cdot ft^{-1} \qquad NN_{14,4} := \left(Z_c - 3\cdot ft\right)\cdot ft^{-1}$$

$$NN_{15,2} := \left(X_c - \frac{B}{2}\right)\cdot ft^{-1} \qquad NN_{15,4} := \left[Z_c - \left(\frac{B}{2}\right)\cdot\tan(\theta)\right]\cdot ft^{-1}$$

$$NN_{16,2} := \left[X_c - \left(\frac{D}{2}\right)\cdot\cos(\theta)\right]\cdot ft^{-1} \qquad NN_{16,4} := \left[Z_c - \left(\frac{D}{2}\right)\cdot\sin(\theta)\right]\cdot ft^{-1}$$

$$NN_{17,2} := \left(X_c - 3\cdot ft\right)\cdot ft^{-1} \qquad NN_{17,4} := \left(Z_c - 3\cdot\tan(2\cdot\theta)\cdot ft\right)\cdot ft^{-1}$$

$$NN_{18,2} := \left(X_c - 2\cdot ft\right)\cdot ft^{-1} \qquad NN_{18,4} := \left(Z_c - 2\cdot ft\right)\cdot ft^{-1}$$

$$NN_{19,2} := \left(X_c - 1\cdot ft\right)\cdot ft^{-1} \qquad NN_{19,4} := \left(Z_c - 2\cdot ft\right)\cdot ft^{-1}$$

$$NN_{20,2} := \left(X_c\right)\cdot ft^{-1} \qquad NN_{20,4} := \left(Z_c - 2\cdot ft\right)\cdot ft^{-1}$$

$$NN_{21,2} := \left(X_c - \frac{B}{2}\right)\cdot ft^{-1} \qquad NN_{21,4} := \left(Z_c\right)\cdot ft^{-1}$$

$NN_{22,2} := \left(X_c - \frac{D}{2}\right) \cdot ft^{-1}$ $NN_{22,4} := \left(Z_c\right) \cdot ft^{-1}$

$NN_{23,2} := \left(X_c - 3 \cdot ft\right) \cdot ft^{-1}$ $NN_{23,4} := \left(Z_c - 3 \cdot \tan(\theta) \cdot ft\right) \cdot ft^{-1}$

$NN_{24,2} := \left(X_c - 2 \cdot ft\right) \cdot ft^{-1}$ $NN_{24,4} := \left(Z_c - 1 \cdot ft\right) \cdot ft^{-1}$

$NN_{25,2} := \left(X_c - 1 \cdot ft\right) \cdot ft^{-1}$ $NN_{25,4} := \left(Z_c - 1 \cdot ft\right) \cdot ft^{-1}$

$NN_{26,2} := \left(X_c\right) \cdot ft^{-1}$ $NN_{26,4} := \left(Z_c - 1 \cdot ft\right) \cdot ft^{-1}$

$NN_{27,2} := \left(X_c - 3 \cdot ft\right) \cdot ft^{-1}$ $NN_{27,4} := \left(Z_c\right) \cdot ft^{-1}$

$NN_{28,2} := \left(X_c - 2 \cdot ft\right) \cdot ft^{-1}$ $NN_{28,4} := \left(Z_c\right) \cdot ft^{-1}$

$NN_{29,2} := \left(X_c - 1 \cdot ft\right) \cdot ft^{-1}$ $NN_{29,4} := \left(Z_c\right) \cdot ft^{-1}$

$NN_{30,2} := \left(X_c\right) \cdot ft^{-1}$ $NN_{30,4} := \left(Z_c\right) \cdot ft^{-1}$

$NN_{31,2} := \left(X_c - Mid\right) \cdot ft^{-1}$ $NN_{31,4} := \left(Z_c\right) \cdot ft^{-1}$

$NN_{32,2} := \left(X_c - Mid \cdot \cos(\theta)\right) \cdot ft^{-1}$ $NN_{32,4} := \left(Z_c - Mid \cdot \sin(\theta)\right) \cdot ft^{-1}$

$NN_{33,2} := \left(X_c - Mid \cdot \cos(2\theta)\right) \cdot ft^{-1}$ $NN_{33,4} := \left(Z_c - Mid \cdot \sin(2\theta)\right) \cdot ft^{-1}$ Note: Joint 34 not used in final model

$NN_{34,2} := \left(X_c - Mid \cdot \sin(3\theta)\right) \cdot ft^{-1}$ $NN_{34,4} := \left(Z_c - Mid \cdot \cos(3\theta)\right) \cdot ft^{-1}$

$NN_{35,2} := \left(X_c - Mid \cdot \sin(2\theta)\right) \cdot ft^{-1}$ $NN_{35,4} := \left(Z_c - Mid \cdot \cos(2\theta)\right) \cdot ft^{-1}$

$NN_{36,2} := \left(X_c - Mid \cdot \sin(\theta)\right) \cdot ft^{-1}$ $NN_{36,4} := \left(Z_c - Mid \cdot \cos(\theta)\right) \cdot ft^{-1}$

$NN_{37,2} := \left(X_c\right) \cdot ft^{-1}$ $\qquad$ $NN_{37,4} := \left(Z_c - Mid\right) \cdot ft^{-1}$

$NN_{38,2} := \left(X_c - Mid2 \cdot \cos\left(3\theta\right)\right) \cdot ft^{-1}$ $\qquad$ $NN_{38,4} := \left(Z_c - Mid2 \cdot \sin\left(3\theta\right)\right) \cdot ft^{-1}$

$i := 1 .. k$

$j := 2 .. 4$

$Nodes_{i,1} := NN_{i,1}$

$$Nodes_{i,j} := \frac{trunc\left(1000. \cdot NN_{i,j}\right)}{1000.}$$

Nodes =

	1	2	3	4
1	1	62	0	22.5
2	2	64.747	0	22.5
3	3	66.758	0	22.5
4	4	68.5	0	22.5
5	5	62	0	25.247
6	6	64.301	0	24.801
7	7	65.531	0	23.857
8	8	66.963	0	23.264
9	9	68.5	0	23.062
10	10	63.357	0	26.031
11	11	65.5	0	26
12	12	66.767	0	26
13	13	67.696	0	26
14	14	68.5	0	26
15	15	62	0	27.258
16	16	62.764	0	27.463

NN - Array of node id's and locations for the first quadrant; the foot units have been removed from the nodal point locations so the array can be downloaded to a text file for input into GT-STRUDL and to satisfy the Mathcad requirement that all data in an array must have the same units.

Once the identification numbers and the coordinates for the nodes and elements in the first quadrant are input into GT-STRUDL, the other nodes and elements in the remaining portions of the cask storage area are generated in GT-STRUDL using successive object copy commands. The nodes and elements in the border areas on either side of the cask storage areas are also generated using standard GT-STRUDL mesh generation techniques and object copy commands. The complete mesh of concrete pad nodes and elements are shown below:

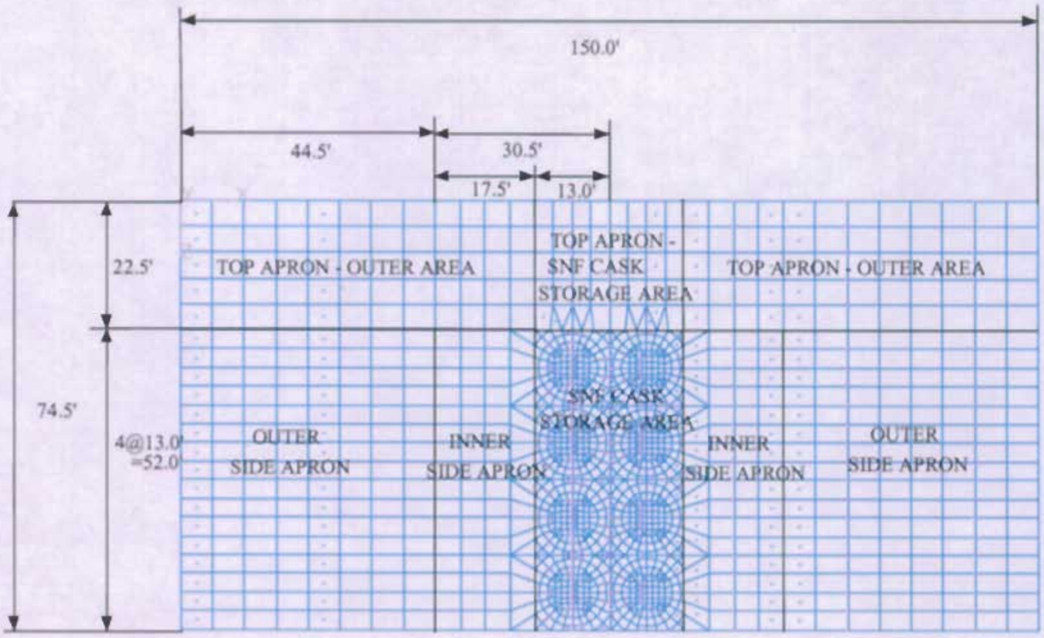

GT STRUDL MODEL LAYOUT

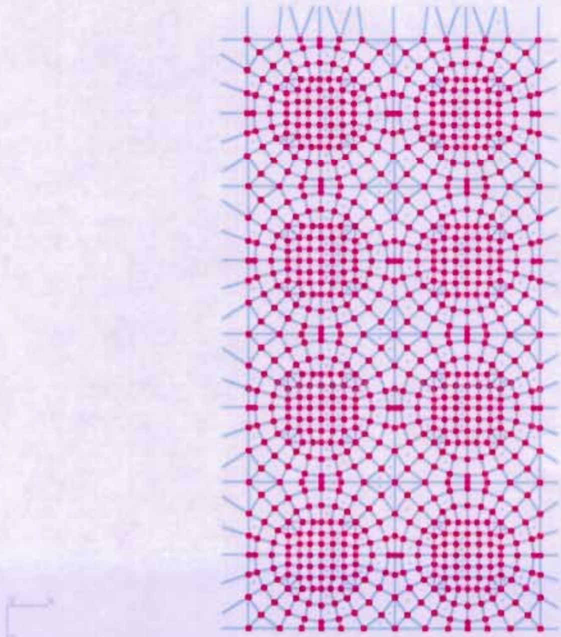

SNF STORAGE CASK AREA NODES AND ELEMENTS

Determine the Soil Spring Stiffnesses:
The supporting soil will be modeled as a set of non-linear springs. The stiffnesses of the vertical springs will be based on the vertical modulus of subgrade reaction and will be linear but will only resist compressive forces. The stiffness of the lateral springs will be based on the horizontal modulus of subgrade reaction. The lateral springs will also be linear, but will resist compressive and tensile forces. Since the loads of concern are due to short term tornado and seismic loads, the moduli will be doubled as mentioned in Section 6.4 of this calculation.

The soil stiffnesses are equal to the moduli of subgrade reaction times the area of the element supported by the springs. To accurately model the soil behavior under bearing loads, the vertical springs must be modeled to resist compressive forces only. This will require both the vertical and horizontal springs to be modeled as non-linear springs. The spring stiffnesses are calculated as follows:

$k_s := 2 \cdot 1000 \cdot \frac{\text{kip}}{\text{ft}^3}$ $\quad k_s = 2000 \frac{\text{kip}}{\text{ft}^3}$ Modulus of Subgrade Reaction per Section 6.4 of this calculation; use the value for short term loads.

$\mu := 0.81$ Coefficient of friction between concrete and soil per Section 6.4 of this calculation.

Vertical Springs:
Spring Elements at the 120 Elements of the 13 ft. by 13 ft. Cask Storage Areas:

$B_1 := \sqrt{\frac{13\text{ft} \cdot 13 \cdot \text{ft}}{120}} \quad B_1 = 1.187\,\text{ft}$

$k_{v1} := k_s \cdot \left(\frac{B_1 + 1 \cdot \text{ft}}{2 \cdot B_1}\right)^2 \cdot B_1^{\,2} \quad k_{v1} = 199.2 \frac{\text{kip}}{\text{in}}$ Modulus of subgrade reaction for a B_1 square footing based on testing using a 1' by 1' plate; see formula 9-4 of Bowles (Bowles 1996).

GT-STRUDL requires Non-Linear Spring data to be input as a set pairs of load vs deflection points. This data is determined below based on the above stiffness:

$\Delta_{v1a} := 1 \cdot \text{in} \quad P_{v1a} := k_{v1} \cdot \Delta_{v1a} \quad P_{v1a} = 199.2\,\text{kip}$

$\Delta_{v1b} := 20 \cdot \text{in} \quad P_{v1b} := k_{v1} \cdot \Delta_{v1b} \quad P_{v1b} = 3984.8\,\text{kip}$

Spring Elements in left and right aprons (52 ft. by 62 ft area modeled with 200 elements) except at the edges; spring elements at the edges will have 1/2 the stiffnesses of these elements:

$B_{2a} := 52 \cdot \text{ft} \quad B_{2b} := 62 \cdot \text{ft} \quad mb := \frac{B_{2b}}{B_{2a}}$

$$k_{v2} := k_s \cdot \left(\frac{mb + 0.5}{1.5 \cdot mb}\right) \cdot \frac{\left(B_{2a} \cdot B_{2b}\right)}{200} \qquad k_{v2} = 2542 \frac{kip}{in}$$

Modulus of subgrade reaction for a rectangular footing based on testing using a 1' by 1' plate; see formula 9-5 of Bowles (Bowles 1996).

$$\Delta_{v2a} := 1 \cdot in \qquad P_{v2a} := k_{v2} \cdot \Delta_{v2a} \qquad P_{v2a} = 2542.2\,kip \qquad \frac{P_{v2a}}{2} = 1271.1\,kip$$

$$\Delta_{v2b} := 20 \cdot in \qquad P_{v2b} := k_{v2} \cdot \Delta_{v2b} \qquad P_{v2b} = 50844.4\,kip \qquad \frac{P_{v2b}}{2} = 25422.2\,kip$$

Spring Elements in the top apron (22.5 ft. by 150 ft. area modeled with 168 elements) except at the edges; spring elements at the edge will have 1/2 the stiffnesses of these elements:

$$B_{3a} := 22.5 \cdot ft \qquad B_{3b} := 150 \cdot ft \qquad mb := \frac{B_{3b}}{B_{3a}}$$

$$k_{v3} := k_s \cdot \left(\frac{mb + 0.5}{1.5 \cdot mb}\right) \cdot \frac{B_{3a} \cdot B_{3b}}{168} \qquad k_{v3} = 2400 \frac{kip}{in}$$

Modulus of subgrade reaction for a rectangular footing based on testing using a 1' by 1' plate; see formula 9-3 of Bowles (Bowles 1996).

$$\Delta_{v3a} := 1 \cdot in \qquad P_{v3a} := k_{v3} \cdot \Delta_{v3a} \qquad P_{v3a} = 2399.6\,kip \qquad \frac{P_{v3a}}{2} = 1199.8\,kip$$

$$\Delta_{v3b} := 20 \cdot in \qquad P_{v3b} := k_{v3} \cdot \Delta_{v3b} \qquad P_{v3b} = 47991.1\,kip^{*} \qquad \frac{P_{v3b}}{2} = 23995.5\,kip$$

*Note: 4799.1 kip used in the GT-STRUDL model; difference doesn't seriously affect results; deflections are such that reactions are below 2399.6 kip; will leave as is.

Horizontal Springs:

"Modulus of Subgrade Reaction" to use for Horizontal Springs:

$$k_{sh} := 2 \cdot 104 \cdot \frac{kip}{ft^3} \qquad k_{sh} = 208 \frac{kip}{ft^3}$$

Modulus of Subgrade Reaction per Section 6.4 of this calculation; use the value for short term loads.

Spring Elements at the 120 Elements of the 13 ft. by 13 ft. Cask Storage Areas:

$$k_{h1} := k_{sh} \cdot \left(\frac{B_1 + 1 \cdot ft}{2 \cdot B_1}\right)^2 \cdot B_1^{\,2} \qquad k_{h1} = 20.7 \frac{kip}{in}$$

Modulus of subgrade reaction for a B_1 square footing based on testing using a 1' by 1' plate; see formula 9-4 of Bowles (Bowles 1996).

GT-STRUDL requires Non-Linear Spring data to be input as a set pairs of load vs deflection points. This data is determined below based on the above stiffness:

$\Delta_{h1a} := 1 \cdot in \qquad P_{h1a} := k_{h1} \cdot \Delta_{h1a} \qquad P_{h1a} = 20.7\,kip$

$\Delta_{h1b} := 20 \cdot in \qquad P_{h1b} := k_{h1} \cdot \Delta_{h1b} \qquad P_{h1b} = 414.4\,kip$

Spring Elements in left and right aprons (52 ft. by 62 ft area modeled with 200 elements) except at the edges; spring elements at the edges will have 1/2 the stiffnesses of these elements:

$B_{2a} := 52 \cdot ft \qquad B_{2b} := 62 \cdot ft \qquad mb := \frac{B_{2b}}{B_{2a}}$

$k_{h2} := k_{sh} \cdot \left(\frac{mb + 0.5}{1.5 \cdot mb}\right) \cdot \frac{B_{2a} \cdot B_{2b}}{200} \qquad k_{h2} = 264 \frac{kip}{in}$

Modulus of subgrade reaction for a rectangular footing based on testing using a 1' by 1' plate; see formula 9-5 of Bowles (Bowles 1996).

$\Delta_{h2a} := 1 \cdot in \qquad P_{h2a} := k_{h2} \cdot \Delta_{h2a} \qquad P_{h2a} = 264.4\,kip \qquad \frac{P_{h2a}}{2} = 132.2\,kip$

$\Delta_{h2b} := 20 \cdot in \qquad P_{h2b} := k_{h2} \cdot \Delta_{h2b} \qquad P_{h2b} = 5287.8\,kip \qquad \frac{P_{h2b}}{2} = 2643.9\,kip$

Spring Elements in the top apron (22.5 ft. by 150 ft. area modeled with 168 elements) except at the edges; spring elements at the edge will have 1/2 the stiffnesses of these elements:

$B_{3a} := 22.5 \cdot ft \qquad B_{3b} := 150 \cdot ft \qquad mb := \frac{B_{3b}}{B_{3a}}$

$k_{h3} := k_{sh} \cdot \left(\frac{mb + 0.5}{1.5 \cdot mb}\right) \cdot \frac{\left(B_{3a} \cdot B_{3b}\right)}{168} \qquad k_{h3} = 250 \frac{kip}{in}$

Modulus of subgrade reaction for a rectangular footing based on testing using a 1' by 1' plate; see formula 9-3 of Bowles (Bowles 1996).

$\Delta_{h3a} := 1 \cdot in \qquad P_{h3a} := k_{h3} \cdot \Delta_{h3a} \qquad P_{h3a} = 249.6\,kip \qquad \frac{P_{h3a}}{2} = 124.8\,kip$

$\Delta_{h3b} := 20 \cdot in \qquad P_{h3b} := k_{h3} \cdot \Delta_{h3b} \qquad P_{h3b} = 4991.1\,kip \qquad \frac{P_{h3b}}{2} = 2495.5\,kip$

Attachment A1.2 Determination of Loads and Cask Stability Under Extreme Loads:

Determine Loads:

Dead Weight:

The design storage casks weigh 200 tons (see Assumption 2 in Section 4.0 of this calculation). This weight will be distributed to the 24 nodes at the general location of the anchor bolts as follows:

$W_{cask} := 200 \cdot TON \qquad F_{ydead} := \frac{W_{cask}}{24} \qquad F_{ydead} = 16.67\,kip$ per node

The dead weight forces will also include the self weight of the concrete pad using a weight density of 150 pcf.

Live Load:

The live load includes the weight of the cask transporter. Information from J & R Engineering (2003) gives the maximum transporter weight as 135000 lbs. The center-to-center spacing of the tracks is about 14 feet. A spacing in the order of 10 feet will be used in the analysis to coincide with the grid spacings between the nodes in the apron area of the model. The track length (center-to-center spacing between the driving wheels of the tracks) is about 20 feet. Based on the grid spacings of the model in the apron areas, nodal point loads will be thus be applied to two rows of 4 nodes, therefore:

$W_{trans} := 135 \cdot kip \quad F_{ylivetrans} := \frac{W_{trans}}{8} \quad F_{ylivetrans} = 16.875\,kip$ per node- unloaded

$F_{ylivetransloaded} := \frac{W_{trans} + W_{cask}}{8} \quad F_{ylivetransloaded} = 66.875\,kip$ per node- loaded

The live load also includes a distributed load of 150 psf per section 6.4 of this calculation.

The Transporter Live Loads are shown below.

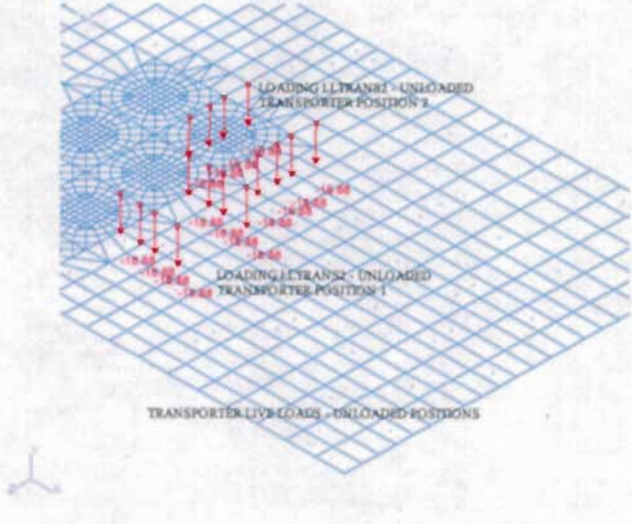

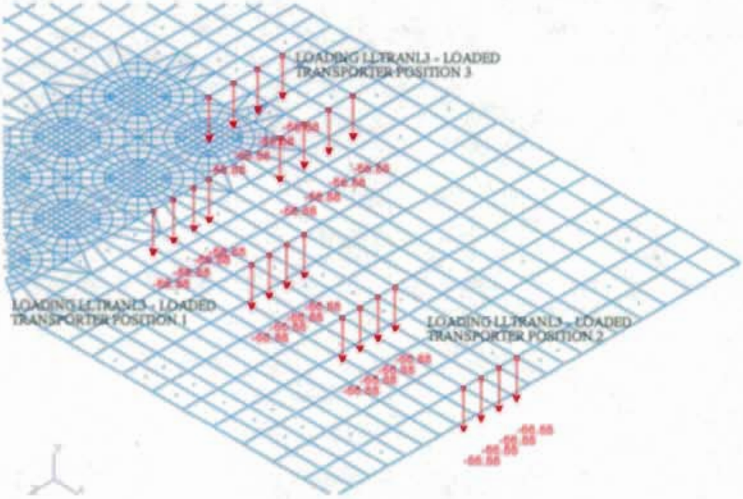

LIVE LOADS - LOADED TRANSPORTER POSITIONS

Snow Load - use the provisions of Section 7 of ASCE 7-02; the resulting snow loads will be at least equivalent to those from 4" of snow:

$C_e := 0.9 \quad C_t := 1.0 \quad I := 1.2 \quad p_g := 5 \cdot psf$

See table 7-2 for C_e; see table 7-3 for C_t; see Table 7-4 for I; see Fig. 7-1 for p_g.

$p_f := 0.7 \cdot C_e \cdot C_t \cdot I \cdot p_g \qquad p_f = 3.78\,psf$

Formula 7-1 of ASCE 7-02.

Seismic Load Factors - Determine load factors to apply to the unit seismic forces determined below; these are used to scale the unit case to obtain the appropriate loads to use in the various load cases involving seismic loads:

$\alpha_{HZPA} := 0.5802 \qquad \alpha_{VZPA} := 0.5188$

Horizontal and Vertical ZPA g levels per DTN MO0402SDSTMHIS.004.

$$\alpha_H := .7287 + \left[\frac{(0.0209 - 0.020)}{0.03 - 0.020}\right] \cdot (0.8589 - 0.7287)$$

$\alpha_H = 0.7404$

$$\alpha_V := .7126 + \left[\frac{(0.0209 - 0.020)}{0.03 - 0.020}\right] \cdot (0.7946 - 0.7126)$$

$\alpha_V = 0.72$

Horizontal and Vertical g levels per DTN MO0402SDSTMHIS.004 at 7% damping and T = 0.0209 sec., the approximate fundamental period of the cask per sht. A20 of this calculation (the wind load calculation).

$\beta_1 := \alpha_H \quad \beta_2 := 0.4 \cdot \beta_1 \quad \beta_3 := \alpha_V \quad \beta_4 := 0.4 \cdot \beta_3 \quad \beta_5 := 1.5 \cdot \alpha_H \quad \beta_6 := 0.4 \cdot \beta_5$

$\beta_7 := 1.5 \cdot \alpha_V \quad \beta_8 := 0.4 \cdot \beta_7 \quad \beta_9 := \beta_7 + 1.0 \quad \beta_{10} := \beta_7 + 0.9 \quad \beta_{11} := \beta_7 + 1.0$

$\beta_{12} := -\beta_7 + 0.9 \quad \beta_{13} := \alpha_{HZPA} \quad \beta_{14} := 0.4 \cdot \beta_{13} \quad \beta_{15} := \alpha_{VZPA} \quad \beta_{16} := 0.4 \cdot \beta_{15}$

$\beta =$

	1
1	0.74042
2	0.29617
3	0.71998
4	0.28799
5	1.11063
6	0.44425
7	1.07997
8	0.43199
9	2.07997
10	1.97997
11	2.07997
12	-0.17997
13	0.5802
14	0.23208
15	0.5188
16	0.20752

Seismic Loads - Determine the nodal point loads to input as a load case in GT STRUDL; the loads will be based on a equivalent static force acting on a cask; using the above load factors in GT STRUDL to obtain the appropriate loads to use in the various load cases involving seismic loads:

$M := (\beta_5)\cdot 120\cdot in\cdot W_{cask}$ $\qquad M = 4442.5\,ft\cdot kip$ Moment at base of cask; based on a cask weight of 200 tons and a cg located 120 in above the base; see Assumption 2, Section 4.0, for this information.

$M = 53310\,kip\cdot in$

$t := 5.5\cdot ft$ Thickness of cask anchorage area.

$\theta := \dfrac{(360\cdot deg)}{24}$ $\qquad \theta = 15\,deg$ Diameter of ring of nodes at modeled anchor locations of cask

$D = 11.875\,ft$ See detail B in Attachment A2.0.

$z_1 := \dfrac{D}{2}$ $\quad z_2 := \left(\dfrac{D}{2}\right)\cdot\cos(\theta)$ $\quad z_3 := \dfrac{D}{2\cdot\sqrt{2}}$ $\quad z_4 := \left(\dfrac{D}{2}\right)\cdot\sin(\theta)$ Distance of nodes from the centerline of the cask.

$i := 1..6$

$z_i := \left(\dfrac{D}{2}\right)\cdot\cos[(i-1)\cdot\theta]$

$$z = \begin{pmatrix} 5.938 \\ 5.735 \\ 5.142 \\ 4.198 \\ 2.969 \\ 1.537 \end{pmatrix} \text{ft}$$

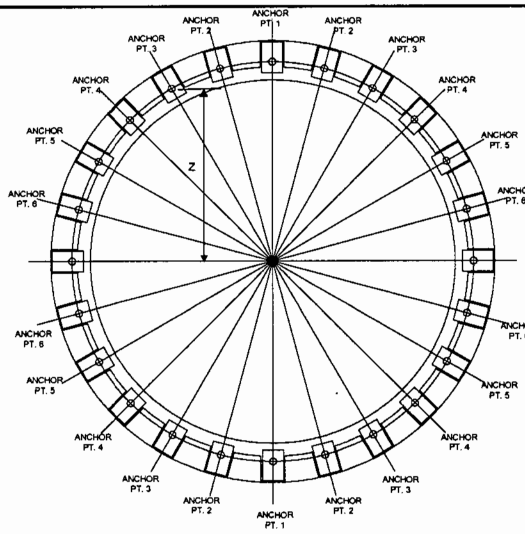

$$P_1 := \left[\frac{M}{\left[2 \cdot z_1 + 4 \cdot \sum_{i=2}^{6} \frac{(z_i)^2}{z_1} \right]} \right] \qquad P_1 = 62.351\,\text{kip}$$

The pullout forces are based on the ring of anchor points acting like a series of bolts in a column base; the individual forces are directly proportional to the distance from the center; location 1 is the furthest from the center; on each side of the cask there is one anchor point at this location and 2 each at the other locations.

$$j := 2 .. 6$$

$$P_j := \frac{(P_1 \cdot z_j)}{z_1} \qquad P = \begin{pmatrix} 62.351 \\ 60.226 \\ 53.998 \\ 44.089 \\ 31.175 \\ 16.138 \end{pmatrix} \text{kip}$$

$$v_E := \beta_5 \cdot \frac{W_{cask}}{7} \qquad v_E = 63.464\,\text{kip}$$

The cask is anchored such that shear is transfered to anchor bolts on only one side to the cask (see Attachment A2.0). Let the shear be conservatively transfered to only 7 bolts.

$$m_E := v_E \cdot \frac{t}{2} \qquad m_E = 174.5\,\text{ft} \cdot \text{kip}$$

$$V_E := 7 \cdot v_E \qquad V_E = 444.251\,\text{kip}$$

Cask Stability under Seismic Loads:

Evaluate the Potential for Rocking:
Utilize the procedures in Appendices B.1 and B.4 of the Seismic Analysis and Design Approach Document (BSC 2004d) to determine the potential sliding displacements.

$D_c := \left(11 + \frac{0.5}{12}\right) \cdot ft$ $D_c = 11.042\,ft$ Diameter of Cask; see Detail B in Section A2.0 of this calculation.

$b := \frac{D_c}{2}$ $b = 5.521\,ft$ Outer Radius of Cask

$h := 245 \cdot in$ Height of Cask; see Assumption 2, Section 4. of this calculation

$L := 120 \cdot in$ Height to Centroid of Cask

$a := \frac{b}{L}$ $a = 0.552$ See Eq. B.1-2b, BSC 2004d

$\alpha := atan(a)$ $\alpha = 0.504\,rad$ $\alpha = 28.902\,deg$ See Eq. B.1-2a, BSC 2004d

$\theta_{omax} := \alpha$ Set θo to α, the maximum value of θo per Step #2, pg. 73, of BSC 2004d.

$j := 1 .. 50$ $\theta\theta_j := j \cdot \frac{\theta_{omax}}{50}$ Determine a vector of potential angles of rotation.

$$RS := \begin{pmatrix} 0.01 & 0.5802 & 0.5188 \\ 0.02 & 0.7287 & 0.7126 \\ 0.030 & 0.9625 & 1.0764 \\ 0.04 & 1.1726 & 1.3636 \\ 0.05 & 1.3620 & 1.5016 \\ 0.06 & 1.5002 & 1.6195 \\ 0.075 & 1.6707 & 1.7470 \\ 0.090 & 1.8084 & 1.7797 \\ 0.100 & 1.8452 & 1.8034 \\ 0.120 & 1.9108 & 1.7896 \\ 0.150 & 1.9447 & 1.7030 \\ 0.170 & 1.9525 & 1.5680 \\ 0.20 & 1.9064 & 1.3971 \\ 0.24 & 1.8560 & 1.2135 \\ 0.30 & 1.7406 & 1.0007 \\ 0.36 & 1.6300 & 0.8616 \\ 0.40 & 1.5693 & 0.7891 \\ 0.46 & 1.4249 & 0.6939 \\ 0.50 & 1.3393 & 0.6425 \\ 0.60 & 1.1618 & 0.5431 \\ 0.75 & 0.8965 & 0.4445 \\ 0.850 & 0.7753 & 0.3982 \\ 1.00 & 0.6340 & 0.3448 \\ 1.50 & 0.3835 & 0.2374 \\ 2.00 & 0.2645 & 0.1782 \\ 3.00 & 0.1484 & 0.1127 \\ 4.00 & 0.0939 & 0.0760 \\ 5.00 & 0.0652 & 0.0559 \\ 10.00 & 0.0163 & 0.0171 \end{pmatrix}$$

Periods (first column) and horizontal (second column) and vertical (third column) accelerations for a damping ratio of 0.5% from MO0402SDSTMHIS.004

$f_{1\theta_j} := \cos(\theta\theta_j) + a \cdot \sin(\theta\theta_j)$ Eq. B.4-6, BSC 2004d

$f_{2\theta_j} := a \cdot \cos(\theta\theta_j) - \sin(\theta\theta_j)$ Eq. B.4-7, BSC 2004d

$F_H := \frac{L \cdot in}{L \cdot in}$ $F_H = 1$ See Eq. B.4-2, BSC 2004d, with L = 120 in, the height to the centroid (see Section 6. of this calculation) and with M_L = M = the mass of the cask.

$i := 1..29$

$vt_i := RS_{i,1}$

$vx_i := RS_{i,2}$

Create vectors to permit cubic spline interpolation of acceleration values

$vy_i := RS_{i,3}$

$vs1 := cspline(vt, vx)$

$vs2 := cspline(vt, vy)$

$M := \frac{W_{cask}}{g}$ Mass of Cask.

$I_B := \left(\frac{1}{12}\right) \cdot M \cdot \left(3 \cdot b^2 + h^2\right) + M \cdot \frac{h^2}{4}$ $I_B = 5.863 \times 10^7 \, lb \, ft^2$ Mass moment of inertia about the base of the cask; standard formula

$C_I := \frac{I_B}{M \cdot L^2}$ $C_I = 1.466$ Eq. B.4-5, BSC 2004a

$C_R := \left(1 - \frac{2 \cdot a^2}{C_I}\right)$ $C_R = 0.584$ Coefficient of Restitution; Eq. B.4-22, BSC 2004d.

$\gamma := -2 \ln\left(C_R\right)$ $\gamma = 1.075$ Eq. B.4-26, BSC 2004d.

$\beta_e := \frac{\gamma}{\left(4\pi^2 + \gamma^2\right)^{\frac{1}{2}}}$ $\beta_e = 0.169$ Equivalent Viscous Damping; Eq. B.4-27, BSC 2004d.

Use a damping ratio of 0.5% (lowest in MO0402SDSTMHIS.004).

$f_{e_j} := \left(\frac{1}{2 \cdot \pi}\right) \cdot \left[\frac{2 \cdot \left(f_{1\theta_j} - 1\right) \cdot g}{C_I \cdot \left(\theta\theta_j\right)^2 \cdot L}\right]^{\frac{1}{2}}$ Rocking Frequency; See Eq. B.4-11,BSC 2004d, for circular frequency, ω; $f_e = \omega/2\pi$.

$T_e := \frac{1}{f_e}$ $T_{e2} := \frac{T_e}{sec}$ Rocking Period

$i := 1..50$

$SAH_i := interp\left(vs1, vt, vx, T_{e2_i}\right)$ $SAV_i := interp\left(vs2, vt, vy, T_{e2_i}\right)$

$F_{V_i} := \left[1 + \left(\frac{a \cdot SAV_i}{F_H \cdot SAH_i}\right)^2\right]^{\frac{1}{2}}$ Eq. B.4-17, BSC 2004d

$SAH_{CAP_i} := 2 \cdot \frac{\left(f_{1\theta_i} - 1\right)}{F_H \cdot F_{V_i} \cdot \theta\theta_i}$ Spectral Acceleration Capacity;
Eq. B.4-18, BSC 2004d

$SAH_{DEM} := interp\left(vs1, vt, vx, T_{e2}\right)$

$SS_i := SAH_{CAP_i} - SAH_{DEM_i}$

```
KK := | i ← 1
      | while SS_i < 0.0
      |   i ← i + 1
      | i
```

Row in the vector of SS where SS becomes positive.

$KK = 3$

$\theta_o := \theta\theta_{KK-1} + \left[\frac{(0.0 - SS_{KK-1})}{(SS_{KK} - SS_{KK-1})}\right] \cdot \left(\theta\theta_{KK} - \theta\theta_{KK-1}\right)$ Determine the angle of rotation at which $SAH_{DEM} = SAH_{CAP}$ (SS = 0.0)

$\theta_o = 0.027$ $\theta_o = 1.534 deg$

$\delta\delta := 2 \cdot b \cdot \sin\left(\theta_o\right)$ $\delta\delta = 3.546 in$ Uplift of edge of cask. See Step #2, pg. 73, BSC 2004d

$$SAH_{DEMfinal} := SAH_{DEM_{KK-1}} + \left[\frac{(0.0 - SS_{KK-1})}{(SS_{KK} - SS_{KK-1})}\right]\cdot\left(SAH_{DEM_{KK}} - SAH_{DEM_{KK-1}}\right)$$

$$SAH_{DEMfinal} = 1.041$$

$$SAH_{CAPfinal} := SAH_{CAP_{KK-1}} + \left[\frac{(0.0 - SS_{KK-1})}{(SS_{KK} - SS_{KK-1})}\right]\cdot\left(SAH_{CAP_{KK}} - SAH_{CAP_{KK-1}}\right)$$

$$SAH_{CAPfinal} = 1.041$$

Since the demand horizontal accleration equals the horizontal acceleration capacity at a very low angle that is well below the maximum of 28.902° indicates the casks will be stable with respect to rocking.

Evaluate the Potential Sliding Displacements:
Utilize the procedures in Appendices B.1 and B.2 of the Seismic Analysis and Design Approach Document (BSC 2004d) to determine the potential sliding displacements.

$\mu_{steel} := 0.3$ Coefficient of friction between steel components; standard value.

$\mu_e := \left[\mu_{steel}\cdot\left(1 - 0.4\cdot\alpha_V\right)\right]$ $\mu_e = 0.214$ Effective coefficient of friction per Eq. B.2-1 of BSC 2004d

$c_s := 2\cdot\mu_e\cdot g$ $c_s = 13.745\frac{ft}{sec^2}$ Sliding coefficient per Eq. B.2-4 of BSC 2004d

$SA_{VH} = \left(1.16\cdot SA_H{}^2\right)^{0.5}$ $SA_{VH} = 1.077\cdot SA_H$ Determination of the vectral horizontal spectral acceleration from Eq. B.2.8 of BSC 2004d.

$SA_{VH} = c_s$

Therefore, $SA_H := \frac{c_s}{1.077}$ $SA_H = 12.762\frac{ft}{sec^2}$ $SA_H = 0.3967\,g$

Extrapolating in the table for the Horizontal Spectra for 7% damping in MO0402SDSTMHIS.004 gives the following period:

$$T := 0.85sec + \left(\frac{0.4310 - 0.3967}{0.4310 - 0.3525}\right)\cdot 0.15\cdot sec \qquad T = 0.916\,sec$$

$f_{es} := \frac{1}{T}$ $\qquad f_{es} = 1.092\,\text{Hz}$

Per Appendix B of BSC 2004d, f_{es} is the effective frequency of the equivalent sliding system of the rigid body; it is equal to the lowest natural frequency at which the 7% damped vector spectral acceleration SA_{VH} equals c_{s}.

Therefore, $\delta_s := \frac{c_s}{\left(2\cdot\pi\cdot f_{es}\right)^2}$ $\qquad \delta_s = 3.502\,\text{in}$

See Eq. B2-7 of BSC 2004d. This is only a moderate displacement. The cask will be stable under seismic loads.

Wind Loads:

Since the casks are cylindrical structures wind loads are evaluated by using the provisions of both ASCE 7-02 and Section 32, "Chimneys," of the Structural Engineering Handbook (Chu et al. 1997). Pressures due to winds in the along wind direction are calculated using the provisions of the former reference while potential pressures in the crossswind direction are calculated using the provisions of the latter reference.

Determine the Natural Frequency of the Casks:
Use formula 10 of Chu 1997:

$D_c = 11.042\,\text{ft}$ $\qquad H := 245\cdot\text{in}$ Diameter and height of the casks; see Assumption 2.0 of this calculation and Detail B of Attachment 2.0

$I := 1.15$ Importance factor; see Table 1604.5 of the IBC (ICC 2000)

$HD := \frac{H}{D_c}$ $\qquad HD = 1.849$

$f_{ccask} := 4000\cdot\text{psi}$ $\qquad w_{ccask} := 146\cdot\text{pcf}$ $\qquad$ See Section 6.4 of this calc.

$E_{ccask} := \left(w_{ccask}\cdot\text{pcf}^{-1}\right)^{1.5}\cdot 33\cdot\sqrt{\left[f_{ccask}\cdot\left(\text{psi}^{-1}\right)\right]}\cdot\text{psi}$

See section 8.5.1 of ACI 349 (ACI 2001a) for Young's Modulus

$E_{ccask} = 3682\,\text{ksi}$

$w_s := \frac{W_{cask}}{\frac{\left(\pi\cdot D_c^{\,2}\right)\cdot H}{4}}$ $\qquad w_s = 205\,\frac{\text{lbf}}{\text{ft}^3}$

Average weight density of a loaded cask.

$f_t := \frac{3.52\cdot D_c}{4\pi(H)^2}\cdot\sqrt{\frac{E_{ccask}\cdot g}{2w_s}}$ $\qquad f_t = 47.907\,\text{Hz}$ $\qquad$ Formula 10, Chu et al. 1997.

$T_t := \frac{1}{f_t}$ $T_t = 0.02087 \text{sec}$

$S := 0.20$ Strouhal number, mid-range, pg. 32-3, Chu et al. 1997.

$V_{cr} := \frac{(f_t \cdot D_c)}{S}$ $V_{cr} = 2645 \frac{\text{ft}}{\text{sec}}$ Critical wind velocity, Formula 3, Chu et al. 1997

$Vel_w := 90 \cdot \text{mph}$ $Vel_w = 132 \frac{\text{ft}}{\text{sec}}$ Extreme Wind Velocity, see Section 6.2 of this calc.

$Vel_t := 189 \cdot \text{mph}$ $Vel_t = 277.2 \frac{\text{ft}}{\text{sec}}$ Maximum Tornado Wind Velocity, see Section 6.2 of this calc.

Since Vcr >> Vel_w and Vel_t, the dynamic influence of vortex shedding, including cross wind forces, need not be considered per pg. 32-3 of Chu et al. 1997.

Determine wind loads based on the above wind speeds:

$K_d := 0.95$ Table 6-4, ASCE 7-02; K_d for a round structure

$K_{zt} := 1.0$ Min topographic factor for a structure not located on top of a hill or escarpment, Fig. 6-4, ASCE 7-02.

$K_z := 0.90$ K_z for exposure C at a 20 ft. height, Table 6-2, ASCE 7-02.

$q := 0.00256 \cdot (K_z \cdot K_{zt} \cdot K_d) \cdot \left[Vel_w \cdot \left(\frac{\text{ft}}{\text{sec}} \right)^{-1} \right]^2 \cdot I \cdot \text{psf}$ $q = 43.86 \text{psf}$ Equation 6-15, ASCE 7-02.

$Dq := D_c \cdot \text{ft}^{-1} \cdot \sqrt{q \cdot \text{psf}^{-1}}$ $Dq = 73.124 > 2.5$ See Figure 6-19, ASCE 7-02.

$C_f := 0.5 + \frac{(HD - 1) \cdot 0.1}{6}$ $C_f = 0.514$ Interpolated value from Fig. 6-19, ASCE 7-02.

$G := 0.85$ See Section 6.5.8.1 of ASCE 7-02.

$p := q \cdot G \cdot C_f$ $p = 19.17 \text{psf}$ Formula 6-25, ASCE 7-02

$V_w := p \cdot D_c \cdot H \qquad V_w = 4.321\,\text{kip}$

Base shear (applied Force) and Moment due to wind at the bottom of the cask.

$M_w := V_w \cdot \frac{H}{2} \qquad M_w = 44.11\,\text{ft} \cdot \text{kip}$

$LF_w := \frac{V_w}{\beta_5 \cdot W_{cask}} \qquad LF_w = 0.009726$

$v_w := \frac{V_w}{7} \qquad v_w = 0.617\,\text{kip}$

$$P_{w_1} := \frac{M_w}{\left[2 z_1 + 4 \cdot \sum_{i=2}^{6} \frac{(z_i)^2}{z_1} \right]} \qquad P_{w_1} = 0.619\,\text{kip}$$

$j := 2 .. 4$

$$P_{w_j} := \frac{\left(P_{w_1} \cdot z_j\right)}{z_1} \qquad P_w = \begin{pmatrix} 0.619 \\ 0.598 \\ 0.536 \\ 0.438 \end{pmatrix} \text{kip}$$

$V_{tm} := 41 \cdot \frac{m}{sec} \qquad V_{tm} = 91.714\,\text{mph}$

Missile speed for an automobile per Table 11 in calculation BSC 2004e.

$$W_t := 32.73 \cdot \text{kip} \cdot \left(\frac{189 \cdot \text{mph}}{360 \cdot \text{mph}} \right)^2 \qquad W_t = 9.021\,\text{kip}$$

$$F_t := 456.9 \cdot \text{kip} \cdot \left(\frac{3990 \cdot \text{lbf}}{3960 \cdot \text{lbf}} \right) \cdot \left(\frac{V_{tm}}{126 \cdot \text{mph}} \right) \qquad F_t = 335.093\,\text{kip}$$

$H := 245 \cdot \text{in} \qquad H = 20.417\,\text{ft}$

$V_t := W_t + F_t \qquad V_t = 344.115\,\text{kip} \qquad v_t := \frac{V_t}{7} \qquad v_t = 49.159\,\text{kip}$

$M_t := 0.5 \cdot W_t \cdot H + F_t \cdot H \qquad M_t = 6934\,\text{ft} \cdot \text{kip}$

$$P_{t_1} := \frac{M_t}{\left[2z_1 + 4\cdot\sum_{i=2}^{6}\frac{(z_i)^2}{z_1}\right]} \qquad P_{t_1} = 97.313\,\text{kip}$$

$j := 2..6$

$$P_{t_j} := \frac{\left(P_{t_1}\cdot z_j\right)}{z_1} \qquad P_t = \begin{pmatrix}97.313\\93.998\\84.276\\68.811\\48.657\\25.187\end{pmatrix}\text{kip}$$

Tornado Wind Loads (without missile effects):

$$W_{tw} := 32.73\cdot\text{kip}\cdot\left(\frac{189\cdot\text{mph}}{360\cdot\text{mph}}\right)^2 \qquad W_{tw} = 9.021\,\text{kip}$$

$H := 245\cdot\text{in} \qquad H = 20.417\,\text{ft}$

$$V_{tw} := W_{tw} \qquad V_{tw} = 9.021\,\text{kip} \qquad v_{tw} := \frac{V_{tw}}{7} \qquad v_{tw} = 1.289\,\text{kip}$$

$M_{tw} := 0.5\cdot W_t\cdot H \qquad M_{tw} = 92\,\text{ft}\cdot\text{kip}$

$$LF_{tw} := \frac{V_{tw}}{\beta_5\cdot W_{cask}} \qquad LF_{tw} = 0.02031$$

$$P_{tw_1} := \frac{M_{tw}}{\left[2z_1 + 4\cdot\sum_{i=2}^{6}\frac{(z_i)^2}{z_1}\right]} \qquad P_{tw_1} = 1.293\,\text{kip}$$

$j := 2..6$

$$P_{tw_j} := \frac{\left(P_{tw_1} \cdot z_j\right)}{z_1} \qquad P_{tw} = \begin{pmatrix} 1.293 \\ 1.248 \\ 1.119 \\ 0.914 \\ 0.646 \\ 0.335 \end{pmatrix} \text{kip}$$

Tornado Missile Loads (without wind effects):

$$V_{tmiss} := F_t \qquad V_{tmiss} = 335.093\,\text{kip} \quad v_{tmiss} := \frac{V_t}{7} \qquad v_{tmiss} = 49.159\,\text{kip}$$

$$M_{tmiss} := F_t \cdot H \qquad M_{tmiss} = 6841\,\text{ft}\cdot\text{kip}$$

$$P_{tmiss_1} := \frac{M_{tmiss}}{\left[2\,z_1 + 4 \cdot \sum_{i=2}^{6} \frac{\left(z_i\right)^2}{z_1}\right]} \qquad P_{tmiss_1} = 96.021\,\text{kip}$$

$$j := 2..6$$

$$P_{tmiss_j} := \frac{\left(P_{tmiss_1} \cdot z_j\right)}{z_1} \qquad P_{tmiss} = \begin{pmatrix} 96.021 \\ 92.749 \\ 83.157 \\ 67.897 \\ 48.01 \\ 24.852 \end{pmatrix} \text{kip}$$

Cask Stability Under Tornado Wind plus Tornado Missile Loads:

$M_{restore} := W_{cask} \cdot \frac{D_c}{2}$ $\quad M_{restore} = 2208\,\text{ft}\cdot\text{kip}$ $\quad$ Restoring Moment

$V_{restore} := \mu_{steel} \cdot W_{cask}$ $\quad V_{restore} = 120\,\text{kip}$ $\quad$ Restoring Shear Force

$M_t = 6934\,\text{ft}\cdot\text{kip} \; > \; M_{restore} = 2208\,\text{ft}\cdot\text{kip}$ $\quad$ NG

$V_t = 344\,\text{kip} \; > \; V_{restore} = 120\,\text{kip}$

Since both the restoring moment and shear forces are significantly less than the applied loads, the cask is not stable with respect to tornado wind plus missile loads.

Attachment A2.0 - Anchorage Design

Anchorage Geometry:

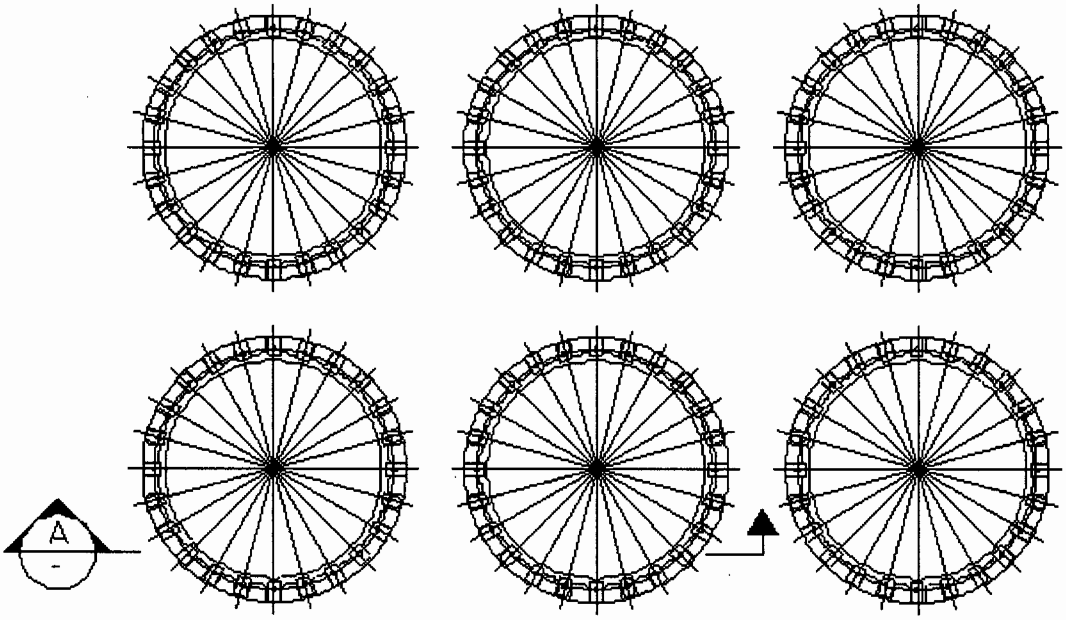

PARTIAL PLAN VIEW

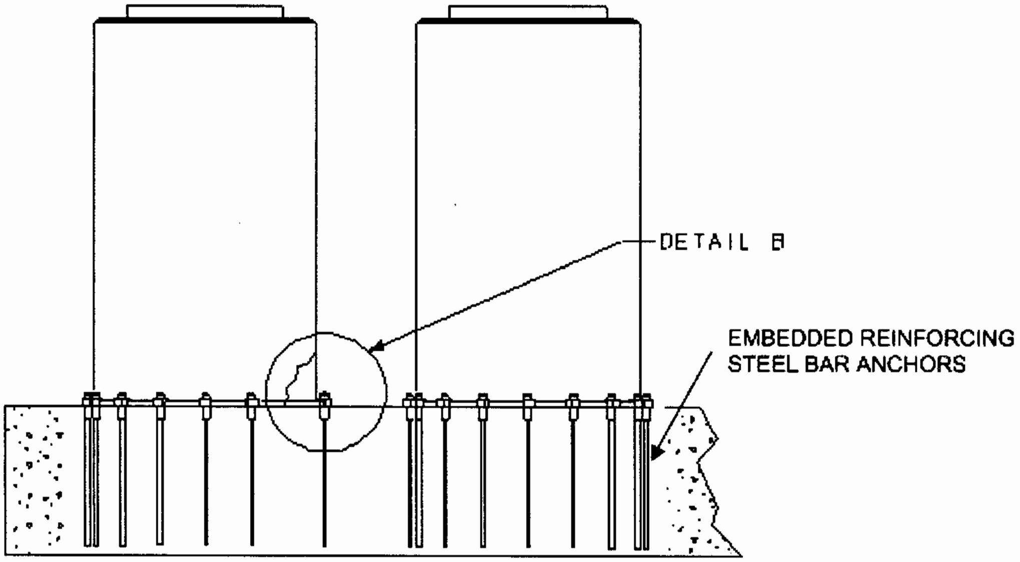

SECTION A
-

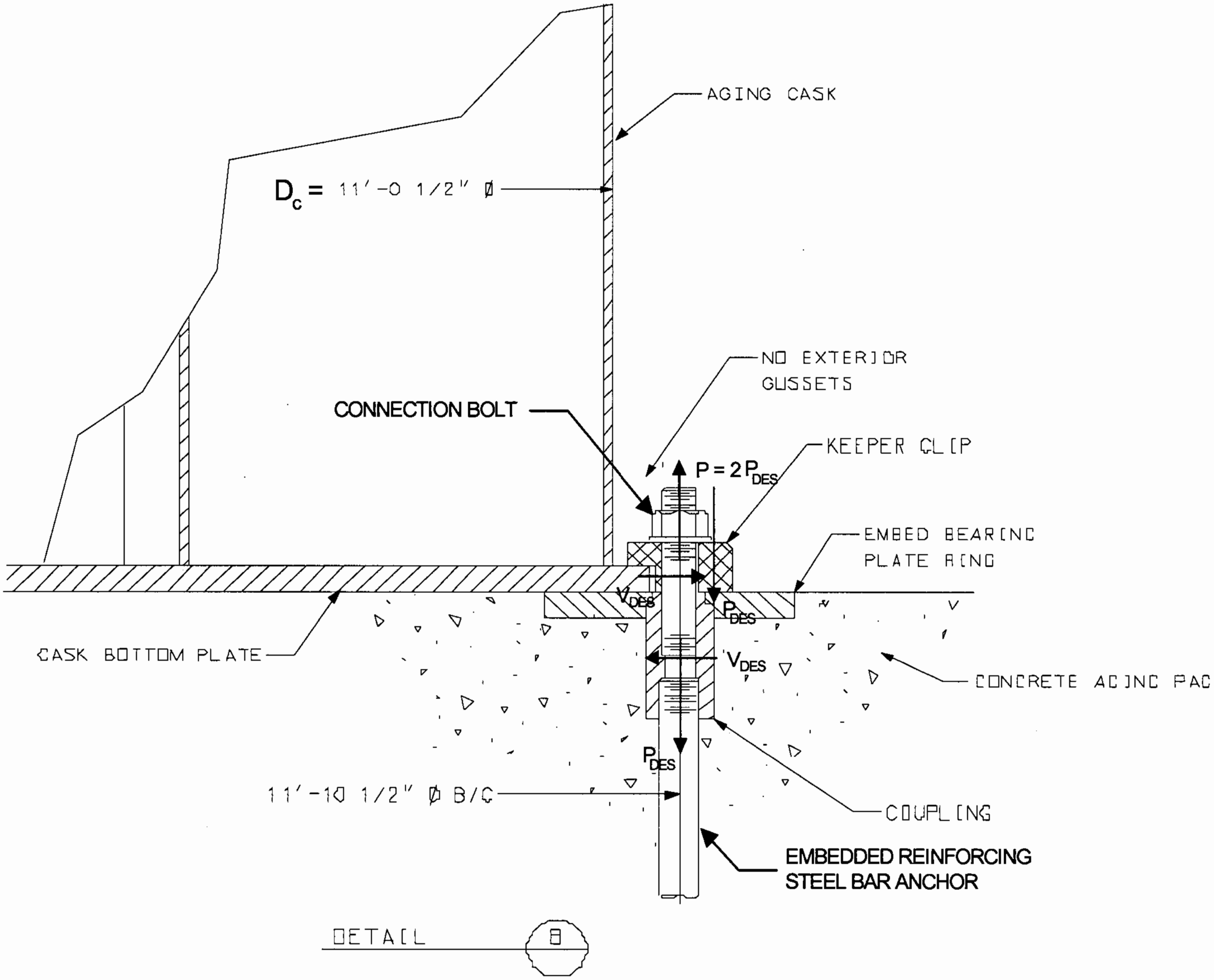

Connection Bolts:

$$P_{des} := \max\left[\left[P - \left(1 - \beta_7\right)\cdot F_{ydead}\right], \left(P_t - F_{ydead}\right)\right]$$

$$P_{des} = 80.6\,\text{kip}$$

Max pullout force per bolt computed in Attachment A1.2 (see sht. A25)

$$v_{des} := \max\left(v_E, v_t\right)$$

Max shear force per bolt computed in Attachment A1.2 (see shts. A24 and A16)

$v_{des} = 63.46\,\text{kip}$ $\quad V_{des} := 7\cdot v_{des}$ $\quad V_{des} = 444.251\,\text{kip}$

Use Galvanized A354, or SA 354, Grade BC bolts. Design per provisions of the AISC N690 Code.

$F_{ubolt} := 125\cdot\text{ksi}$ See ASME B & PV Code (ASME 2004), Section II, for SA 354 material.

$F_t := 1.4 \cdot 0.33 \cdot F_{ubolt}$ $F_t = 57.75\,\text{ksi}$ See Table Q1.5.2.1 of AISC N690; 1.4 stress increase factor for tornado and seismic loads from Table Q1.5.7.1, note g.

$F_v := 1.4 \cdot 0.17 \cdot F_{ubolt}$ $F_v = 29.75\,\text{ksi}$

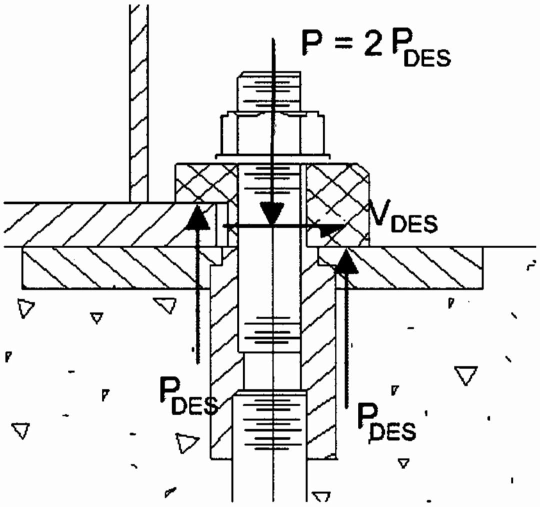

$A_{reqdt} := \dfrac{2P_{des}}{F_t}$ $A_{reqdt} = 2.793\,\text{in}^2$

(Tensile Force = 2 x P_{DES} due to prying)

$A_{reqv} := \dfrac{v_{des}}{F_v}$ $A_{reqv} = 2.133\,\text{in}^2$

try $d_{bolt} := 2.5 \cdot \text{in}$ $A_{tens} := 4.00 \cdot \text{in}^2$ OK

Interaction between shear and tension is not checked since the geometry of the anchorage system is such that shear is transmitted to bolts on one side of the cask while pullout forces are resisted by the bolts on the other side of the cask.

Embedded Rebar:

$\phi_t := 0.90$ Strength reduction factor for tension per Section 9.3.2.2 (a) of ACI-349.

$f_{ybar} := 75 \cdot \text{ksi}$ Yield strength of an A615, Gr. 75 reinforcing steel bar.

$N_u := P_{des}$

$N_u = 80.647\,\text{kip}$ Pullout load.

Required strength of an embedded reinforcing bar in tension. .

$A_{reqd} := \dfrac{N_u}{\phi_t \cdot f_{ybar}}$

$A_{reqd} = 1.195\,\text{in}^2$

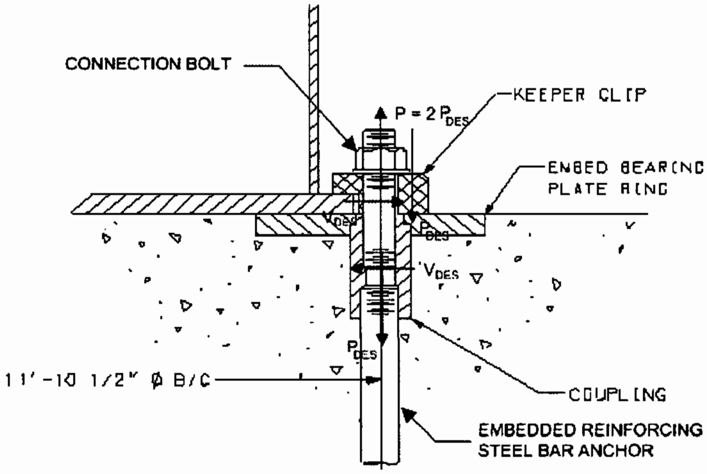

Try a #14 bar threaded at the end.

$d_b := 1.693 \cdot in$ $A_{tens} := 1.41 \cdot in^2$ Min. Tensile Stress Area for a 1.5 in diameter bolt OK (see pg. 4-147, AISC 1989)

$A_{bar} := 2.25 \cdot in^2$

$N_{bar} := \phi_t \cdot f_{ybar} \cdot A_{tens}$ $N_{bar} = 95.2\,kip$ $>$ $N_u = 80.6\,kip$ OK

$$l_d := \left(\frac{3}{40}\right) \cdot \left(\frac{f_{ybar}}{\sqrt{f_c \cdot psi^{-1}} \cdot psi}\right) \cdot \frac{d_b}{2.5}$$

Based on formula 12-1 of ACI-349 with α, β, γ all equal to 1 and $(c + K_{tr})/d_b = 2.5$

$l_d = 53.871\,in$ $l_d = 4.489\,ft$

use $l_d := 4.5 \cdot ft$ $l_d = 54\,in$

Check shear:

$\phi_v := 0.85$ Strength reduction factor for shear per Section 9.3.2.3 of ACI-349.

$\phi V_n := \phi_v \cdot A_{tens} \cdot f_{ybar}$ $\phi V_n = 89.9\,kip$ Based on formula 11-17 of ACI-349 with $A_v = A_{tens}$ and $\alpha = 90^o$.

$\phi V_n = 89.9\,kip$ $>$ $v_{des} = 63.5\,kip$ OK

Keeper Clip:

$f_y := 36 \cdot ksi$

$M_{pl} := P_{des} \cdot 1 \cdot in \quad M_{pl} = 80.647\,kip \cdot in$

$V_{pl} := P_{des} \quad V_{pl} = 80.647\,kip$

$t_{pl} := 2 \cdot in$

$$S_{reqd} := \frac{M_{pl}}{1.6 \cdot 0.6 \cdot f_y}$$

$S_{reqd} = 2.334\,in^3$

$$b_m := 6 \cdot \frac{S_{reqd}}{{t_{pl}}^2}$$

$b_m = 3.5\,in$

$$A_{vreqd} := \frac{1.5 V_{pl}}{1.4 \cdot 0.4 f_y}$$

$A_{vreqd} = 6.001\,in^2$

$$b_v := \frac{A_{vreqd}}{t_{pl}} \quad b_v = 3\,in$$

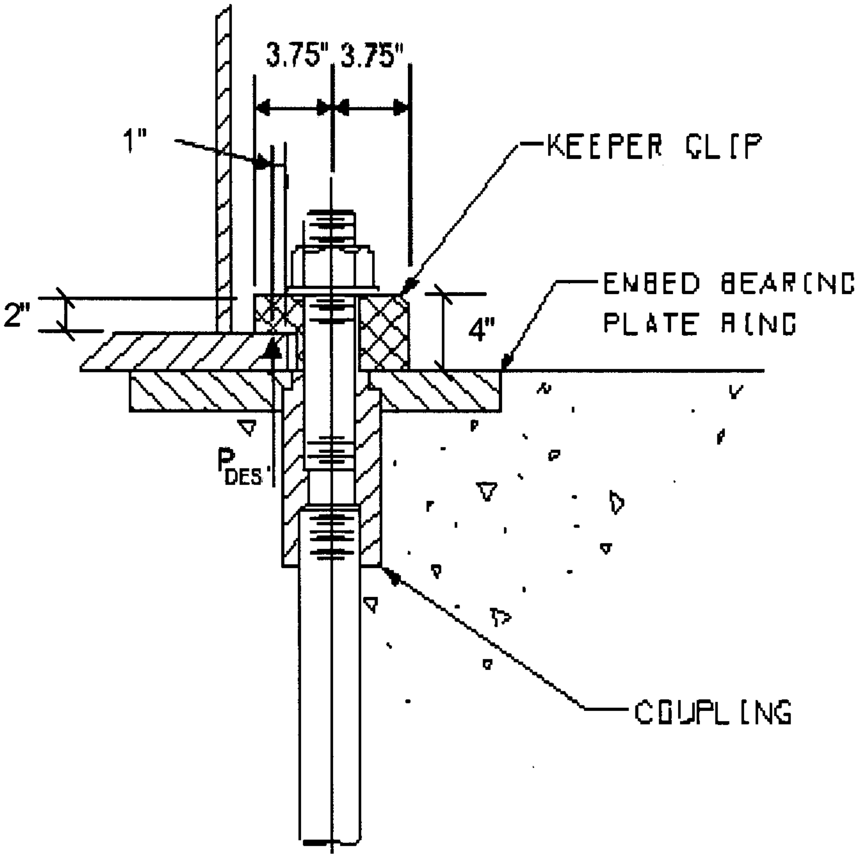

Use a 5" wide plate.

Base Ring Plate

Check bearing - let the bearing area be equal to the width of the keeper clip (5 in.) times the length of the cask flange that will bear on the ring plate (about 6 in.)

$t_{pl} := 2 \cdot in$

$A_{brg} := (6 \cdot in) \cdot (5 \cdot in)$ $\quad A_{brg} = 30 in^2$

$f_p := \dfrac{P_{des} + F_{ydead}}{A_{brg}}$ $\quad f_p = 3.244 ksi$

$A_1 := A_{brg}$ $\quad A_2 := (6 \cdot in + t_{pl}) \cdot (5 \cdot in + 2 \cdot t_{pl})$ $\quad A_2 = 72 in^2$ $\quad \sqrt{\dfrac{A_2}{A_1}} = 1.549$

$\phi_p := 0.70$ See Section 9.3.2.4 of ACI 349

$F_p := \phi_p \cdot 0.85 \cdot f_c \cdot \sqrt{\dfrac{A_2}{A_1}}$ See Section 10.17.1 of ACI 349

$F_p = 4.609 ksi$ $>$ $f_p = 3.244 ksi$ OK

Coupler:

The coupler must be long enough to accomodate both the connection bolt and the embeded . The minimum length of thread engagement is:

$L_e := 1.777 \cdot in$ See pg. 21 of Calc. PGE-009-CALC-001 (included in Womack 2001).

Use a 2 in. long thread in the top of the coupler for the connection bolt, a 3 in. long thread in the bottom for th embeded bolt, and a 1 in. long space in between. The longer thread distance is used for the embeded bolts to provide additional tolerance on bolt position to help in setting the positon of the base plates and the anchor plates. Therefore:

$L_{coupler} := 6 \cdot in$

Use a 5 in. diameter coupler made of A36 bar stock.
Check tensile and shear stresses:

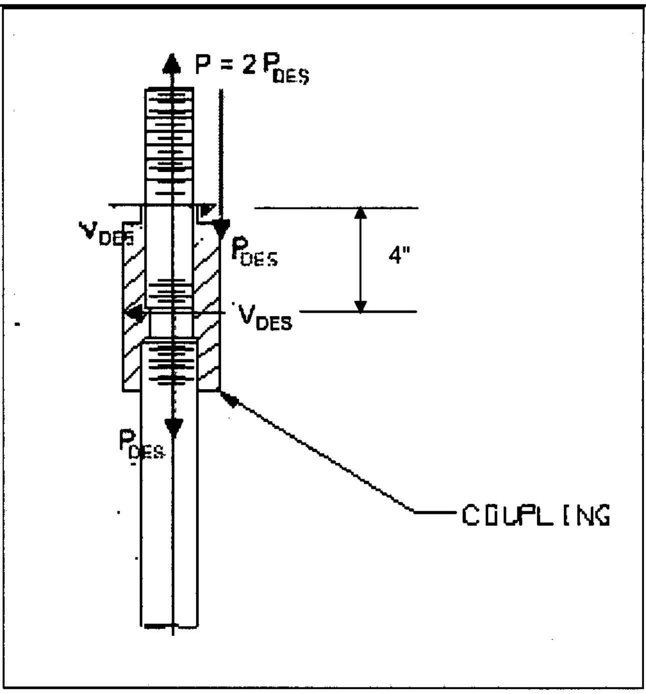

$OD_{coupler} := 5 \cdot in \qquad ID_{coupler} := 1.5 \cdot in$

$$A_{coupler} := \pi \cdot \frac{\left(OD_{coupler}{}^2 - ID_{coupler}{}^2\right)}{4}$$

$A_{coupler} = 17.868\,in^2$

$F_b := 1.6 \cdot 0.6 \cdot f_y \qquad F_b = 34.56\,ksi$ See section Q1.5.1.4.5 of AISC N690; see Table Q1.5.7.1 of AISC N690 for 1.6 increase factor for tornado and seismic loads.

$F_{ten} := 1.6 \cdot 0.6 \cdot f_y \qquad F_{ten} = 34.56\,ksi$ See section Q1.5.1.1 of AISC N690; see Table Q1.5.7.1 of AISC N690 for 1.6 increase factor for tornado and seismic loads

$F_v := 1.4 \cdot 0.4 \cdot f_y \qquad F_v = 20.16\,ksi$ See section Q1.5.1.2 of AISC N690; see Table Q1.5.7.1 of AISC N690, note g, for 1.4 increase factor for tornado and seismic loads

$$M_{coupler} := P_{des} \cdot \frac{OD_{coupler}}{2} \qquad M_{coupler} = 201.617\,in \cdot kip$$

or

$M_{coupler} := v_{des} \cdot 4 \cdot in \qquad M_{coupler} = 253.858\,in \cdot kip$ (Governs)

$$S_{coupler} := \frac{\left[\pi \cdot \left(OD_{coupler}{}^4 - ID_{coupler}{}^4\right)\right]}{32 \cdot OD_{coupler}} \qquad S_{coupler} = 12.172\,in^3$$ See pg. 6-20, AISC Manual.

$f_b := \frac{M_{coupler}}{S_{coupler}}$ $f_b = 20.855\,ksi$ $<$ $F_b = 34.56\,ksi$ OK

$f_{ten} := \frac{P_{des}}{A_{coupler}}$ $f_{ten} = 4.514\,ksi$ $<$ $F_{ten} = 34.56\,ksi$ OK

$f_v := \frac{v_{des}}{A_{coupler}}$ $f_v = 3.552\,ksi$ $<$ $F_v = 20.16\,ksi$ OK

Boss at top of coupler:

$OD_{boss} := 4 \cdot in$ $ID_{boss} := 1.5 \cdot in$

$A_{boss} := \pi \cdot \frac{\left(OD_{boss}^2 - ID_{boss}^2\right)}{4}$ $A_{boss} = 10.799\,in^2$

$f_v := \frac{v_{des}}{A_{boss}}$ $f_v = 5.877\,ksi$ $<$ $F_v = 20.16\,ksi$ OK

Check threads in the boss; evaluate the thread shear strength against pullout forces at the ultimate strengths of the bolt and the reinforcing bar.

$\tau := \frac{\left(F_{ubolt} \cdot A_{tens}\right)}{\pi \cdot d_{bolt} \cdot 1.5 \cdot in}$ $\tau = 14.961\,ksi$ $<$ $F_v = 20.16\,ksi$ OK

Standard formula for average shear stress in thread body due to pullout; a thread length of 1.5 in is used.

$F_{ubar} := 100 \cdot ksi$ $A_{bar} = 2.25\,in^2$

$d_{barthread} := 1.5 \cdot in$

$\tau_{bar} := \frac{\left(F_{ubar} \cdot A_{bar}\right)}{\pi \cdot d_{barthread} \cdot 2.5 \cdot in}$ $\tau_{bar} = 19.099\,ksi$ $<$ $F_v = 20.16\,ksi$ OK

Standard formula for average shear stress in thread body due to pullout; a thread length of 2.5 in and a thread base diameter of 1.5 in. are used.

A 3.0 – GT-STRUDL Analysis

The latest GT-STRUDL analysis of the pad is documented in the following files:

‘AGING PAD REVBX 7FT.gti’ – Input File
‘AGING PAD REVBX 7FT.gts’- Graphical Interface and Restart File
‘AGING PAD REVBX 7FT.gto’ – Output File

Pertinent output has been taken from the output file and presented in Section 3.1 below. Contours of reactions given in Section 3.1 were plotted using the graphical interface file. The model input is given in the input file and reproduced in the output file.

A3.1 - Pertinent GT-STRUDL Output

The GT STRUDL model has been organized into a pad area where the casks will be stored and an apron area where the transporter will operate. The cask storage area is comprised of 8 pads with apron areas on either side and at the top as shown below:

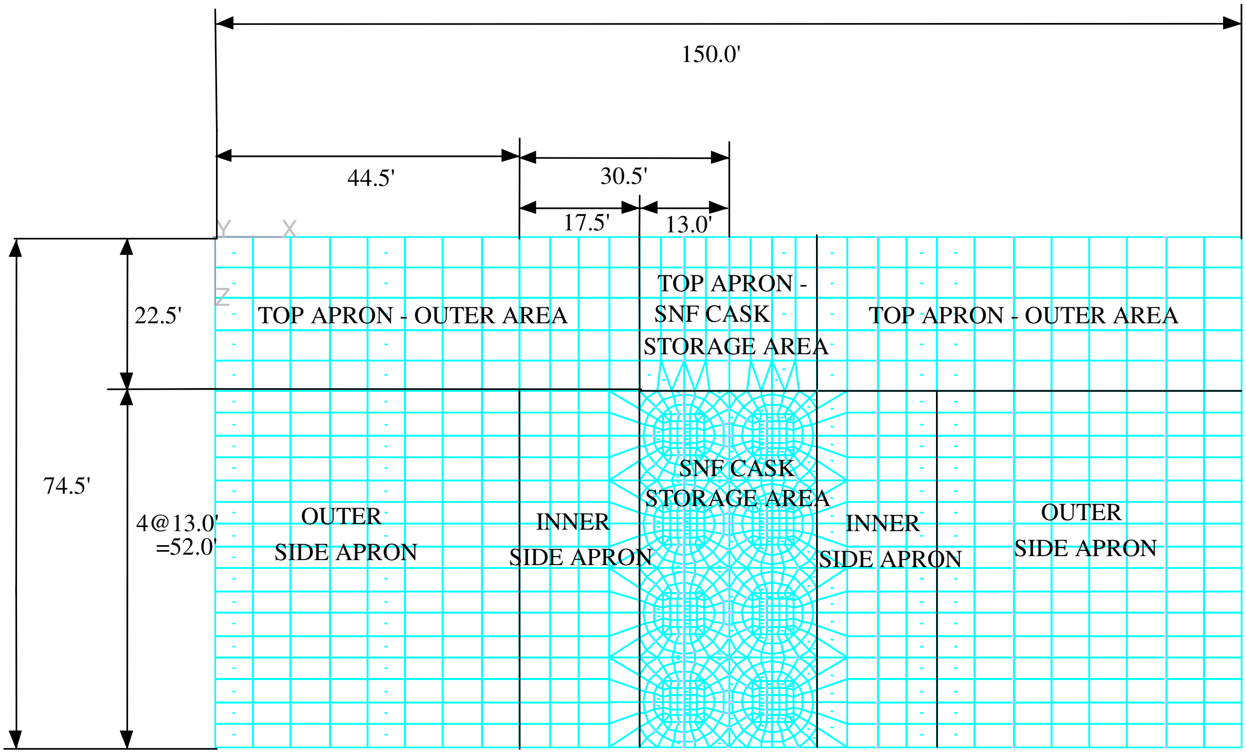

GT STRUDL MODEL LAYOUT

Contours for enveloped element internal reactions are printed for plate elements making up the model of the slab.

Also output are the sum of the reactions around the origin. These are used to verify slab stability.

Finally, reactions at the spring elements associated with the highest displacements are output to aid in checking soil bearing.

Local Coordinate System and Reactions:
Shown below are sketches showing the local coordinate system and GT-STRUDL positive sign conventions for the results:

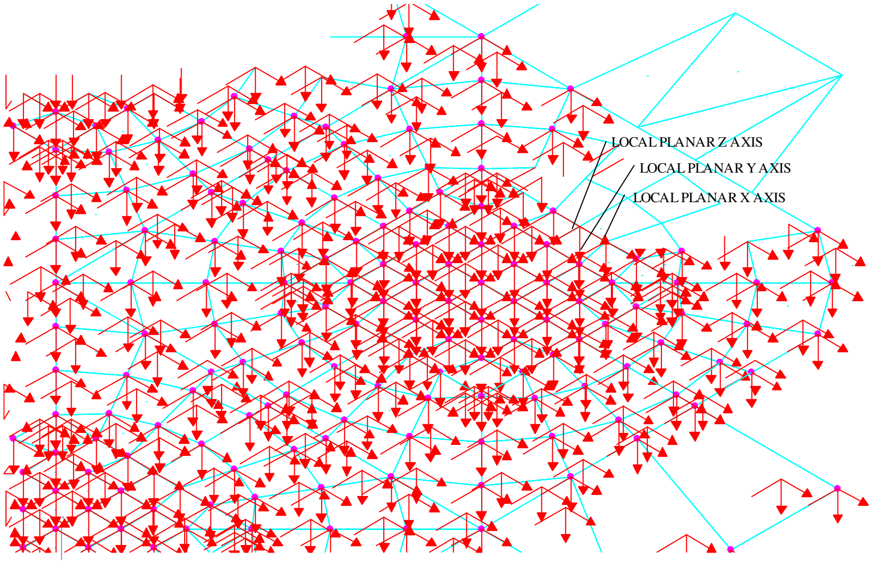

LOCAL COORDINATE SYSTEM FOR PAD ELEMENTS

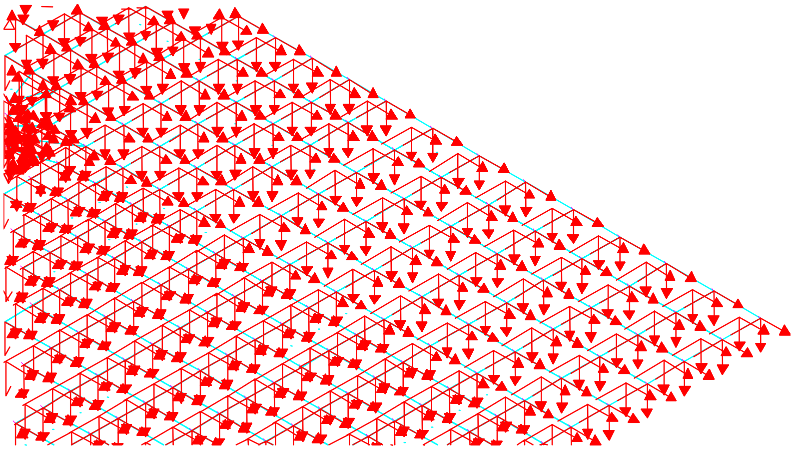

LOCAL COORDINATE SYSTEM FOR APRON ELEMENTS

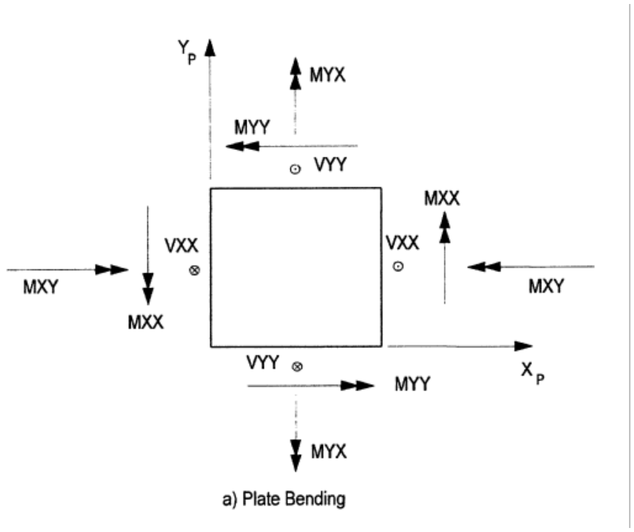

a) Plate Bending

POSITIVE GT-STRUDL SIGN CONVENTION FOR RESULTS
(VIEW IS OF THE BOTTOM OF A PLATE ELEMENT – THE +LOCAL Z AXIS IS DOWN)
(SEE FIG. 2.3-11OF VOL. 3 OF THE GT-STRUDL USER MANUAL)
NOTE: FOR THE MODEL OF THIS DESIGN, THE POSITIVE GT-STRUDL MOMENTS PRODUCE TENSION ON THE BOTTOM OF THE PLATE ELEMENTS, WHICH IS THE SAME AS THE NORMAL REINFORCED CONCRETE DESIGN CONVENTION WHERBY MOMENTS PRODUCING TENSION ON THE BOTTOM ARE POSITIVE.

Results for a 7 ft. thick Cask Storage Pad and Inner Apron areas and 3 ft. thick Top and Outer Aprons:

Design Load Combinations:

Load Comb. No.	Load Combination
'COMBU1'	'D + L(u1) + EQX + 0.4EQY(down) + 0.4EQZ'
'COMBU2'	'D + L(u2) + EQX + 0.4EQY(down) + 0.4EQZ'
'COMBU3'	'D + L(u1) + 0.4EQX + 0.4EQY(down) + EQZ'
'COMBU4'	'D + L(u2) + 0.4EQX + 0.4EQY(down) + EQZ'
'COMBU5'	'D + L(u1) + 0.4EQX + EQY(down) + 0.4EQZ'
'COMBU6'	'D + L(u2) + 0.4EQX + EQY(down) + 0.4EQZ'
'COMBU7'	'D + L(l1) + EQX + 0.4EQY(down) + 0.4EQZ'
'COMBU8'	'D + L(l2) + EQX + 0.4EQY(down) + 0.4EQZ'
'COMBU9'	'D + L(l3) + EQX + 0.4EQY(down) + 0.4EQZ'
'COMBU10'	'D + L(l1) + 0.4EQX + 0.4EQY(down) + EQZ'
'COMBU11'	'D + L(l2) + 0.4EQX + 0.4EQY(down) + EQZ'
'COMBU12'	'D + L(l3) + 0.4EQX + 0.4EQY(down) + EQZ'
'COMBU13'	'D + L(l1) + 0.4EQX + EQY(down) + 0.4EQZ'
'COMBU14'	'D + L(l2) + 0.4EQX + EQY(down) + 0.4EQZ'
'COMBU15'	'D + L(l3) + 0.4EQX + EQY(down) + 0.4EQZ'
'COMBU16'	'D + EQX + 0.4EQY(down) + 0.4EQZ'
'COMBU17'	'D + EQX + 0.4EQY(down) + 0.4EQZ'
'COMBU18'	'D + 0.4EQX + 0.4EQY(down) + EQZ'
'COMBU19'	'D + 0.4EQX + EQY(down) + 0.4EQZ'
'COMBU20'	'0.9D + EQX + 0.4EQY(up) + 0.4EQZ'
'COMBU21'	'0.9D + 0.4EQX + 0.4EQY(up) + EQZ'
'COMBU22'	'0.9D + 0.4EQX + EQY(up) + 0.4EQZ'
'COMBU23'	'D + L(u1) + Wtx'
'COMBU24'	'D + L(u1) + Wtz'
'COMBU25'	'D + L(u2) + Wtx'
'COMBU26'	'D + L(u2) + Wtz'
'COMBU27'	'D + L(l1) + Wtx'
'COMBU28'	'D + L(l1) + Wtz'
'COMBU29'	'D + L(l1) + Wtx'
'COMBU30'	'D + L(l1) + Wtz'
'COMBU31'	'D + L(l3) + Wtx'
'COMBU32'	'D + L(l3) + Wtz'
'COMBU33'	'1.4D + 1.7Sn + 1.7L(unload 1)'
'COMBU34'	'1.4D + 1.7Sn + 1.7L(unload 2)'
'COMBU35'	'1.4D + 1.7Sn + 1.7L(loaded 1)'
'COMBU36'	'1.4D + 1.7Sn + 1.7L(loaded 2)'
'COMBU37'	'1.4D + 1.7Sn + 1.7L(loaded 3)'
'COMBU38'	'1.4D + 1.7Sn + 1.7L(unloaded 1) + 1.7Wx'
'COMBU39'	'1.4D + 1.7Sn + 1.7L(unloaded 1) + 1.7Wz'
'COMBU40'	'1.4D + 1.7Sn + 1.7L(unloaded 2) + 1.7Wx'
'COMBU41'	'1.4D + 1.7Sn + 1.7L(unloaded 2) + 1.7Wz'
'COMBU42'	'1.4D + 1.7Sn + 1.7L(loaded 1) + 1.7Wx'
'COMBU43'	'1.4D + 1.7Sn + 1.7L(loaded 1) + 1.7Wz'
'COMBU44'	'1.4D + 1.7Sn + 1.7L(loaded 2) + 1.7Wx'
'COMBU45'	'1.4D + 1.7Sn + 1.7L(loaded 2) + 1.7Wz'
'COMBS46'	'1.4D + 1.7Sn + 1.7L(loaded 3) + 1.7Wx'
'COMBU47'	'1.4D + 1.7Sn + 1.7L(loaded 3) + 1.7Wz'

Contour maps that envelope reactions for the above load cases are printed out below:

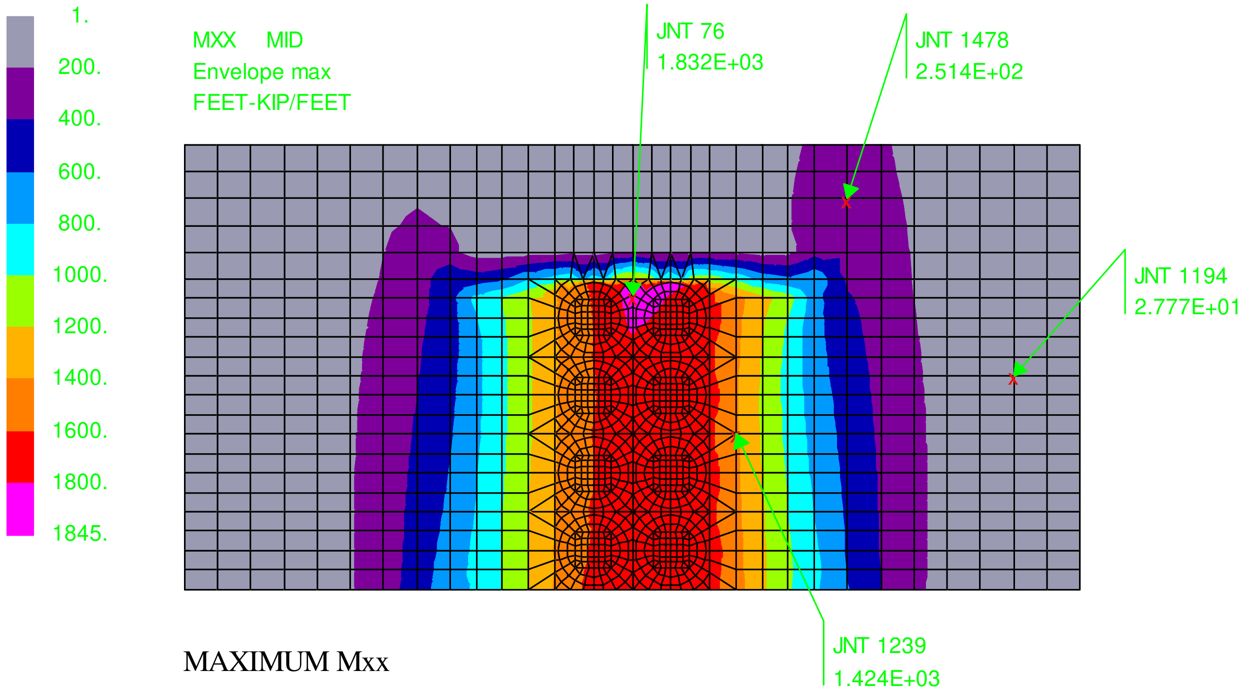

MAXIMUM Mxx

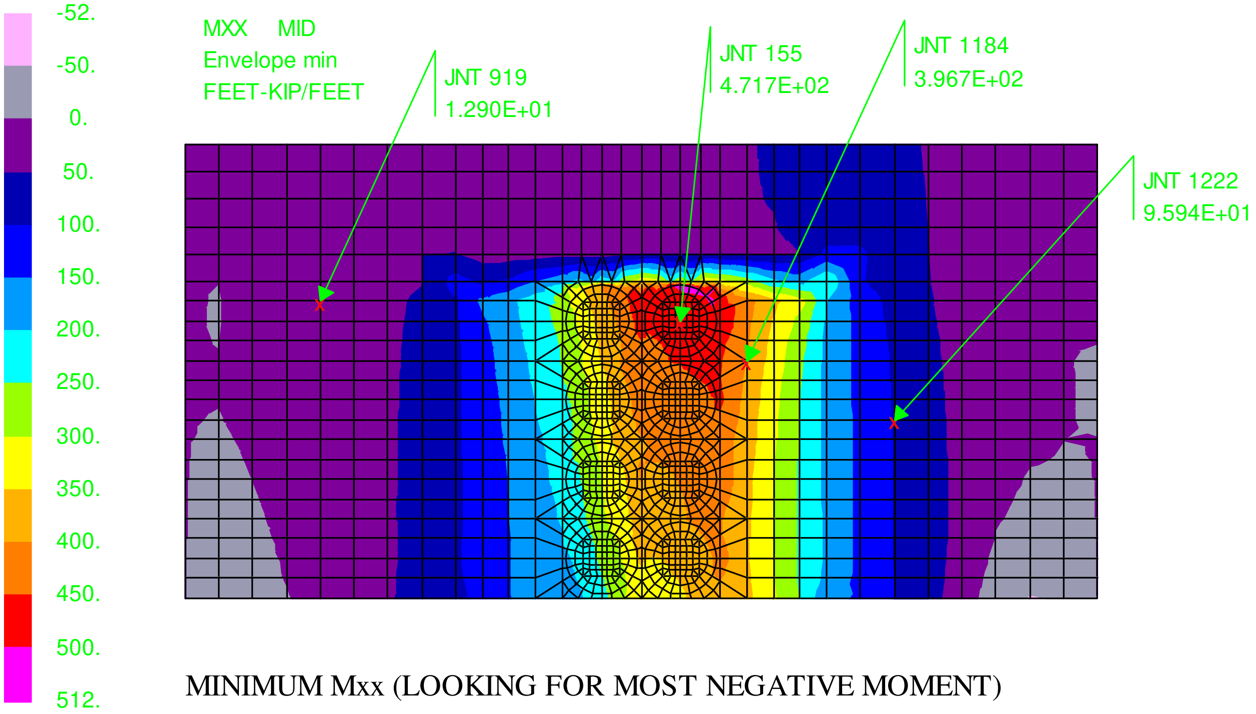

MINIMUM Mxx (LOOKING FOR MOST NEGATIVE MOMENT)

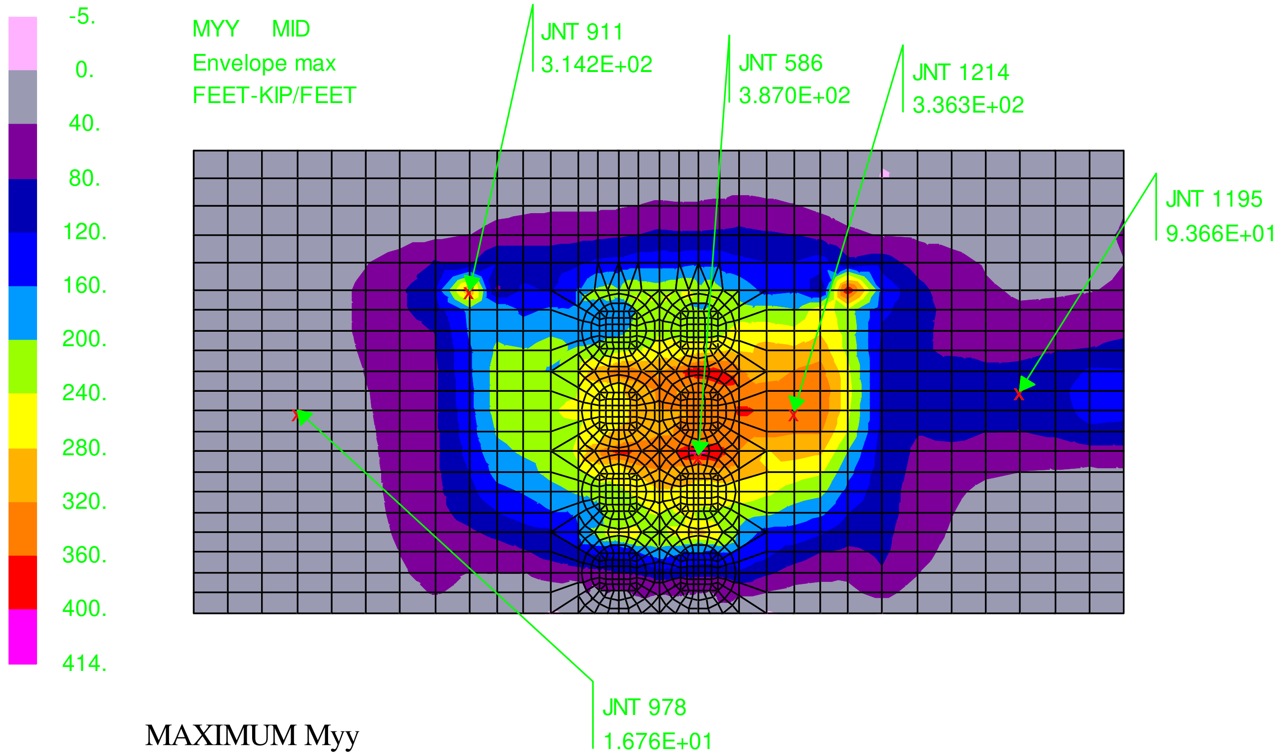

MAXIMUM Myy

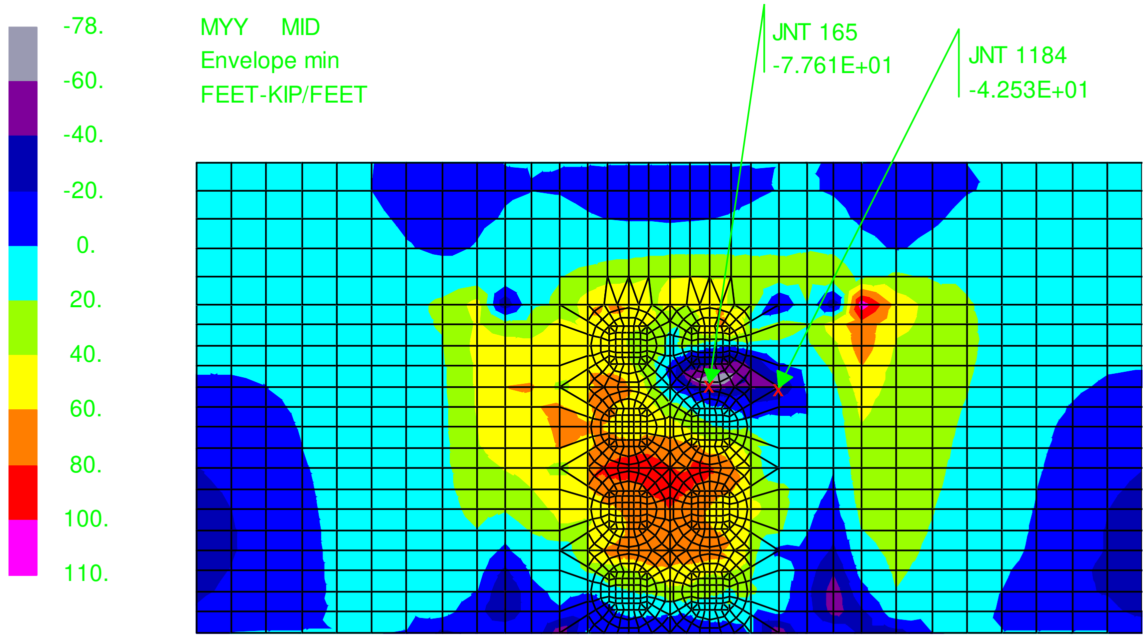

MINIMUM Myy (LOOKING FOR THE MOST NEGATIVE Myy)

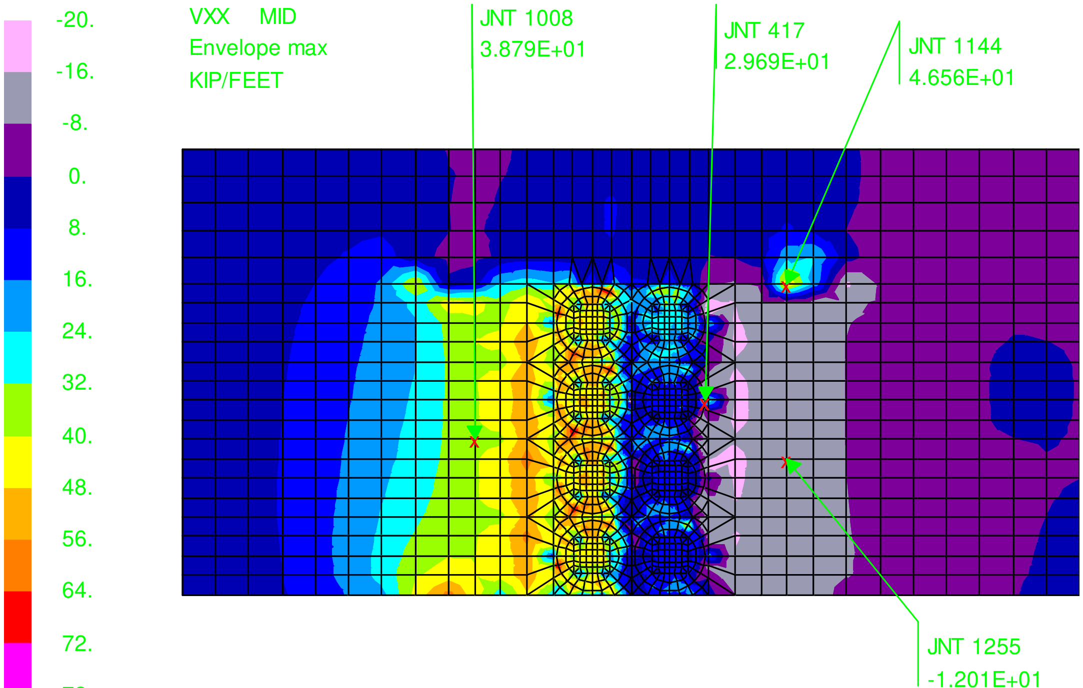

MAXIMUM Vxx

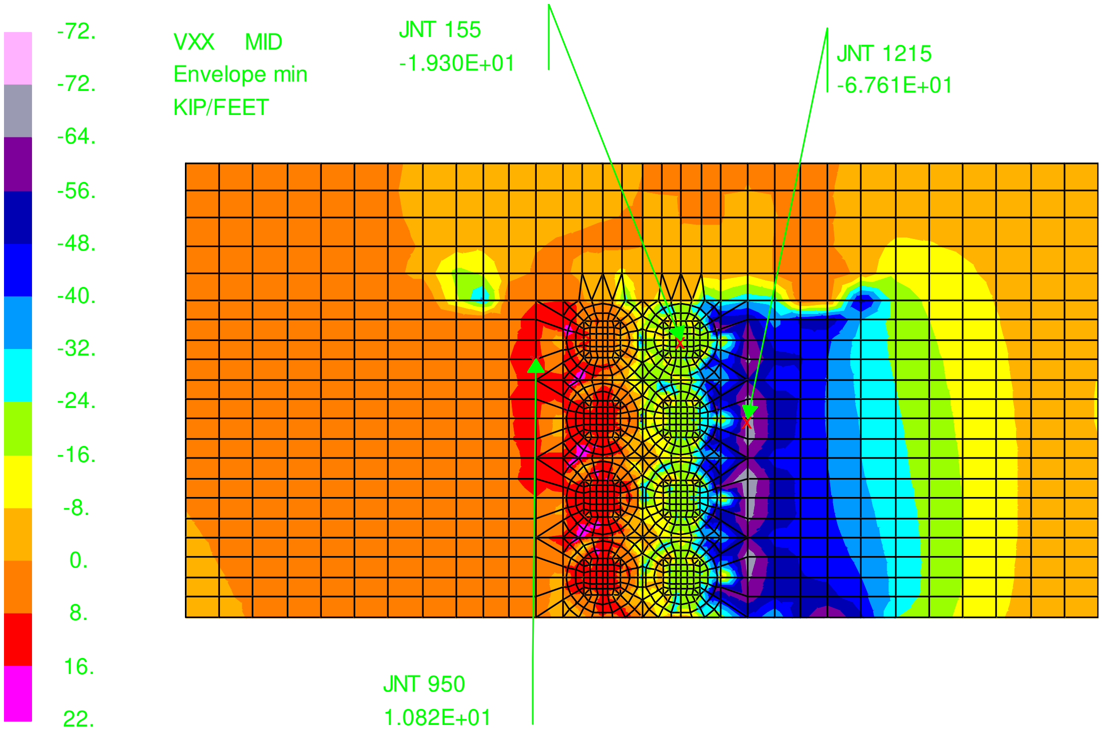

MINIMUM Vxx

CALCULATION SHEET

JOB NO. 24540	CALC. NO. 170-00C-HAP0-00100-000	REV. NO. 00B	SHEET NO. A43
TITLE AGING AREA – DESIGN OF A CONCRETE SLAB FOR STORAGE OF SNF AND HLW CASKS			

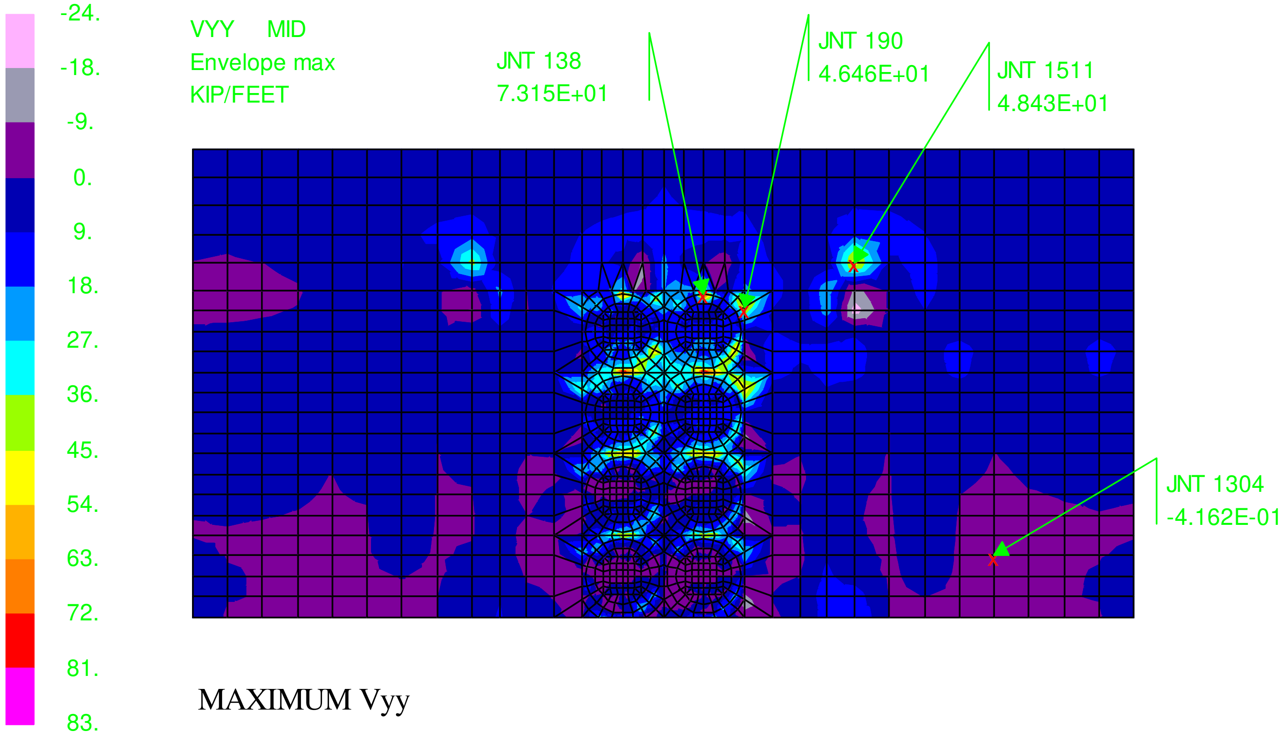

MAXIMUM Vyy

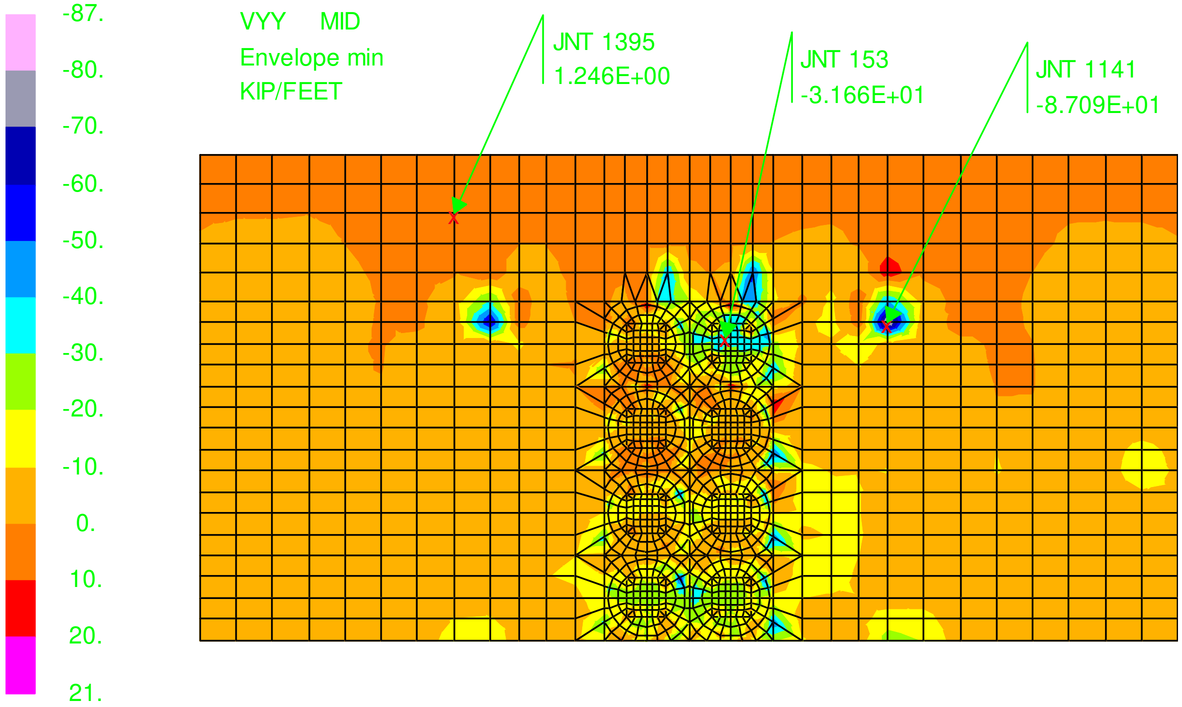

MINIMUM Vyy

The slabs will be designed for reactions that act over large areas of the model and., more or less, represent average reactions. The very high reactions that are concentrated in very small areas won't be used as design reactions as they act over too small an area of the slab. Based on this and the resultant ranges given in the contour plots above the following are used as design reactions:

<u>SNF Cask Storage Area:</u>

Mxx+, Positive Design Moment (tension in the bottom of the slab; "max" moments from the model) = 1845 ft-kip/ft

Mxx-, Negative Design Moment (tension in the top of the slab; "min" (or negative) moments from the model)
= -78 ft-kip/ft (since the resulting negative moments on pg. A40 have similar magnitudes and signs as the positive design moments, when they should have negative signs and different magnitudes, indicates that there is little tension in the top of the slab; for design (of the reinforcing in the top of the slab), however use the same value as used for the minimum Myy moment as the moments can be dependent on the position of the transporter.)

Myy+, Positive Design Moment = 400 ft-kip/ft

Myy-, Negative Design Moment = -78 ft-kip/ft (see note above for Mxx-)

Vxx, Design Shear (can be based on the + or – shear) = 56 kip/ft

Vyy, Design Shear (can be based on the + or – shear) = 54 kip/ft

<u>Inner Apron Area at the sides of the SNF Cask Storage Areas:</u>

Mxx+, Positive Design Moment = 1600 ft-kip/ft

Mxx-, Negative Design Moment = -50 ft-kip/ft

Myy+, Positive Design Moment = 360 ft-kip/ft

Myy-, Negative Design Moment = -50 ft-kip/ft (use the same value as Mxx-)

Vxx, Design Shear (can be based on the + or – shear) = 64 kip/ft

Vyy, Design Shear (can be based on the + or – shear) = 45 kip/ft

Top Apron at the SNF Storage Cask Areas:

Mxx+, Positive Design Moment = 800 ft-kip/ft

Mxx-, Negative Design Moment = -20 ft-kip/ft (use the same value as Mxx- for the outer areas; see below)

Myy+, Positive Design Moment = 240 ft-kip/ft (use the same value as for the positive Myy moment in the outer apron areas since this moment depends on the position of the transporter)

Myy-, Negative Design Moment = -20 ft-kip/ft (see above note for Mxx+ for the SNF Cask storage area)

Vxx, Design Shear (can be based on the + or – shear) = 24 kip/ft

Vyy, Design Shear (can be based on the + or – shear) = 40 kip/ft

Outer (Sides and Top) Areas:

Mxx+, Positive Design Moment = 600 ft-kip/ft

Mxx-, Negative Design Moment = -50 ft-kip/ft (see above note for Mxx+ for the SNF Cask storage area)

Myy+, Positive Design Moment = 160 ft-kip/ft

Myy-, Negative Design Moment = -60 ft-kip/ft (see above note for Mxx+ for the SNF Cask storage area)

Vxx, Design Shear (can be based on the + or – shear) = 32 kip/ft

Vyy, Design Shear (can be based on the + or – shear) = 30 kip/ft

Soil Reactions – Reactions in the Nonlinear Spring Elements:

```
**** ACTIVE UNITS -  LENGTH   WEIGHT   ANGLE    TEMPERATURE   TIME
              UNITS  FEET      KIPS     DEG      FAH              SEC
```

Service Load Combinations:

```
Load
Comb.
No.      Load Combination
'DEAD' 'TOTAL DEAD WEIGHT'
'COMBS1' 'D + Sn + L(unload 1)' 'COMBS2' 'D + Sn + L(unload 2)'
'COMBS3' 'D + Sn + L(loaded 1)'
'COMBS4' 'D + Sn + L(loaded 2)'
'COMBS5' 'D + Sn + L(loaded 3)'
'COMBS6' 'D + Sn + L(unloaded 1) + Wx'
'COMBS7' 'D + Sn + L(unloaded 1) + Wz'
'COMBS8' 'D + Sn + L(unloaded 2) + Wx'
'COMBS9' 'D + Sn + L(unloaded 2) + Wz'
'COMBS10' 'D + Sn + L(loaded 1) + Wx'
'COMBS11' 'D + Sn + L(loaded 1) + Wz'
'COMBS12' 'D + Sn + L(loaded 2) + Wx'
'COMBS13' 'D + Sn + L(loaded 2) + Wz'
'COMBS14' 'D + Sn + L(loaded 3) + Wx'
'COMBS15' 'D + Sn + L(loaded 3) + Wz'
'COMBS16' 'D + Wx'
'COMBS17' 'D + Wz'
```

```
SUM OF REACTIONS ABOUT COORDINATE  X     0.000  Y     0.000  Z     0.000

          /---------------------FORCE---------------------//--------------------MOMENT--------------------/
 LOADING         X FORCE        Y FORCE       Z FORCE      X MOMENT       Y MOMENT       Z MOMENT

 DEAD            0.000      10174.216        0.000    -439781.189        0.000     763074.692

 COMBS1            0.000      12031.389        0.000    -510087.867        0.000     903948.315

 COMBS2            0.000      12029.815        0.000    -507536.177        0.000     903115.254

 COMBS3            0.000      12432.205        0.000    -526179.360        0.000     944055.279

 COMBS4            0.000      12431.761        0.000    -526104.956        0.000     963584.043

 COMBS5            0.000      12423.987        0.000    -512593.439        0.000     935269.873

 COMBS6          -34.566      12031.389        0.000    -510087.915     -1676.453     904389.069

 COMBS7            0.000      12031.415       34.566    -509650.819     -2592.454     903949.772

 COMBS8          -34.566      12029.814        0.000    -507536.225     -1676.453     903556.008

 COMBS9            0.000      12029.841       34.566    -507099.129     -2592.454     903116.712

COMBS10          -34.566      12432.205        0.000    -526179.408     -1676.453     944496.033

 COMBS11           0.000      12432.232       34.566    -525742.312     -2592.454     944056.737

 COMBS12         -34.566      12431.760        0.000    -526105.004     -1676.453     964024.797
```

```
COMBS13       0.000   12431.787    34.566  -525667.908   -2592.454   963585.500

COMBS14     -34.566   12423.987     0.000  -512593.487   -1676.453   935710.626

COMBS15       0.000   12424.014    34.566  -512156.391   -2592.454   935271.330

COMBS16     -34.566   10174.216     0.000  -439781.237   -1676.453   763515.446

COMBS17       0.000   10174.242    34.566  -439344.141     -2592.454      763076.150
```

```
**** Summary of Global Reaction Envelopes ****

 ================================================
  Type        Value      Load    Joint
 ================================================

 Force X  Min  -0.655229E-01  COMBS6   NS11347
          Max   0.199857E-04  COMBS7   NS11338
 Force Y  Min   0.127603E+01  COMBS16  NS10001
          Max   0.273581E+02  COMBS10  NS11347
 Force Z  Min  -0.153847E-01  COMBS6   NS10904
          Max   0.578251E-01  COMBS7   NS11269
 Moment X Min   0.000000E+00  DEAD     NS10001
          Max   0.000000E+00  DEAD     NS10001
 Moment Y Min   0.000000E+00  DEAD     NS10001
          Max   0.000000E+00  DEAD     NS10001
 Moment Z Min   0.000000E+00  DEAD     NS10001
          Max   0.000000E+00  DEAD     NS10001
 ================================================
```

Seismic Load Combinations:

```
Load
Comb.
No.      Load Combination
'COMBU1' 'D + L(u1) + EQX + 0.4EQY(down) + 0.4EQZ'
'COMBU2' 'D + L(u2) + EQX + 0.4EQY(down) + 0.4EQZ'
'COMBU3' 'D + L(u1) + 0.4EQX + 0.4EQY(down) + EQZ'
'COMBU4' 'D + L(u2) + 0.4EQX + 0.4EQY(down) + EQZ'
'COMBU5' 'D + L(u1) + 0.4EQX + EQY(down) + 0.4EQZ'
'COMBU6' 'D + L(u2) + 0.4EQX + EQY(down) + 0.4EQZ'
'COMBU7' 'D + L(l1) + EQX + 0.4EQY(down) + 0.4EQZ'
'COMBU8' 'D + L(l2) + EQX + 0.4EQY(down) + 0.4EQZ'
'COMBU9' 'D + L(l3) + EQX + 0.4EQY(down) + 0.4EQZ'
'COMBU10' 'D + L(l1) + 0.4EQX + 0.4EQY(down) + EQZ'
'COMBU11' 'D + L(l2) + 0.4EQX + 0.4EQY(down) + EQZ'
'COMBU12' 'D + L(l3) + 0.4EQX + 0.4EQY(down) + EQZ'
'COMBU13' 'D + L(l1) + 0.4EQX + EQY(down) + 0.4EQZ'
'COMBU14' 'D + L(l2) + 0.4EQX + EQY(down) + 0.4EQZ'
'COMBU15' 'D + L(l3) + 0.4EQX + EQY(down) + 0.4EQZ'
'COMBU16' 'D + EQX + 0.4EQY(down) + 0.4EQZ'
'COMBU17' 'D + EQX + 0.4EQY(down) + 0.4EQZ'
'COMBU18' 'D + 0.4EQX + 0.4EQY(down) + EQZ'
'COMBU19' 'D + 0.4EQX + EQY(down) + 0.4EQZ'
'COMBU20' '0.9D + EQX + 0.4EQY(up) + 0.4EQZ'
'COMBU21' '0.9D + 0.4EQX + 0.4EQY(up) + EQZ'
'COMBU22' '0.9D + 0.4EQX + EQY(up) + 0.4EQZ'
```

```
SUM OF REACTIONS ABOUT COORDINATE  X      0.000  Y      0.000  Z      0.000

             /---------------------FORCE---------------------//--------------------MOMENT--------------------/
 LOADING              X FORCE         Y FORCE        Z FORCE       X MOMENT        Y MOMENT        Z MOMENT

 COMBU1             -7575.902      14358.584      3030.361    -594376.686    -561884.356    1123791.974

 COMBU2             -7575.902      14357.009      3030.361    -591824.996    -561884.356    1122958.914

 COMBU3             -3030.361      14360.231      7575.902    -567412.061    -702035.543    1096691.605

 COMBU4             -3030.361      14358.657      7575.902    -564860.371    -702035.543    1095858.545

 COMBU5             -3030.361      17266.097      3030.361    -718596.486    -361119.963    1314663.919

 COMBU6             -3030.361      17264.522      3030.361    -716044.796    -361119.963    1313830.859

 COMBU7             -7575.902      14759.400      3030.361    -610468.179    -561884.356    1163898.939

 COMBU8             -7575.902      14758.956      3030.361    -610393.775    -561884.356    1183427.702

 COMBU9             -7575.902      14751.182      3030.361    -596882.258    -561884.356    1155113.532

 COMBU10            -3030.361      14761.048      7575.902    -583503.554    -702035.543    1136798.570

 COMBU11            -3030.361      14760.603      7575.902    -583429.150    -702035.543    1156327.333

 COMBU12            -3030.361      14752.830      7575.902    -569917.633    -702035.543    1128013.163

 COMBU13            -3030.361      17666.913      3030.361    -734687.979    -361119.963    1354770.884

 COMBU14            -3030.361      17666.468      3030.361    -734613.575    -361119.963    1374299.647

 COMBU15            -3030.361      17658.695      3030.361    -721102.058    -361119.963    1345985.477

 COMBU16            -7575.902      12546.136      3030.361    -525747.374    -561884.356     986272.581

 COMBU17            -7575.902      12546.136      3030.361    -525747.374    -561884.356     986272.581

 COMBU18            -3030.361      12547.783      7575.902    -498782.749    -702035.543     959172.212

 COMBU19            -5162.751      15453.611      3030.361    -649970.103    -464540.898    1204334.701

 COMBU20            -7114.950       7046.460      3030.361    -286569.443    -539528.196     567913.153

 COMBU21            -2845.980       6713.426      7575.902    -243265.128    -693093.082     519237.101

 COMBU22            -2845.980       3879.462      3030.361    -149671.797    -352177.501     306719.636

**** Summary of Global Reaction Envelopes ****

 ================================================
  Type        Value       Load    Joint
 ================================================

 Force X  Min  -0.135277E+02  COMBU1   NS11118
          Max  -0.360908E+00  COMBU21  NS10001
 Force Y  Min   0.492529E+00  COMBU22  NS10720
          Max   0.374812E+02  COMBU13  NS11347
 Force Z  Min   0.371762E+00  COMBU1   NS10001
          Max   0.133506E+02  COMBU3   NS11128
```

```
 Moment X Min   0.000000E+00  COMBU1   NS10001
          Max   0.000000E+00  COMBU1   NS10001
 Moment Y Min   0.000000E+00  COMBU1   NS10001
          Max   0.000000E+00  COMBU1   NS10001
 Moment Z Min   0.000000E+00  COMBU1   NS10001
          Max   0.000000E+00  COMBU1   NS10001
 ==============================================
```

Tornado Load Combinations:

```
Load
Comb.
No.      Load Combination__________
'COMBU23' 'D + L(u1) + Wtx'
'COMBU24' 'D + L(u1) + Wtz'
'COMBU25' 'D + L(u2) + Wtx'
'COMBU26' 'D + L(u2) + Wtz'
'COMBU27' 'D + L(l1) + Wtx'
'COMBU28' 'D + L(l1) + Wtz'
'COMBU29' 'D + L(l2) + Wtx'
'COMBU30' 'D + L(l2) + Wtz'
'COMBU31' 'D + L(l3) + Wtx'
'COMBU32' 'D + L(l3) + Wtz'
```

```
SUM OF REACTIONS ABOUT COORDINATE  X      0.000  Y      0.000  Z      0.000

              /---------------------FORCE---------------------//--------------------MOMENT--------------------/
 LOADING           X FORCE        Y FORCE       Z FORCE       X MOMENT       Y MOMENT        Z MOMENT

 COMBU23           -416.294     11986.669         0.000    -508409.628     -13480.075     908357.462

 COMBU24              0.000     11982.368       416.294    -500435.786     -33458.816     900265.658

 COMBU25           -416.294     11985.094         0.000    -505857.938     -13480.075     907524.401

 COMBU26              0.000     11980.793       416.294    -497884.096     -33458.816     899432.597

 COMBU27           -416.294     12387.485         0.000    -524501.121     -13480.075     948464.426

COMBU28               0.000     12383.184       416.294    -516527.278     -33458.816     940372.623

 COMBU29           -416.294     12387.041         0.000    -524426.717     -13480.075     967993.189

 COMBU30              0.000     12382.740       416.294    -516452.875     -33458.816     959901.386

 COMBU31           -416.294     12379.267         0.000    -510915.200     -13480.075     939679.019

 COMBU32              0.000     12374.966       416.294    -502941.358     -33458.816     931587.216
```

```
**** Summary of Global Reaction Envelopes ****

 ==============================================
  Type        Value       Load    Joint
 ==============================================

 Force X  Min  -0.734631E+00  COMBU23  NS11148
          Max   0.544308E-01  COMBU24  NS11372
 Force Y  Min   0.151674E+01  COMBU23  NS10001
          Max   0.274288E+02  COMBU27  NS11347
  Force Z  Min  -0.154481E+00  COMBU23  NS11337
          Max   0.809131E+00  COMBU24  NS11193
```

```
Moment X Min   0.000000E+00  COMBU23  NS10001
         Max   0.000000E+00  COMBU23  NS10001
Moment Y Min   0.000000E+00  COMBU23  NS10001
         Max   0.000000E+00  COMBU23  NS10001
Moment Z Min   0.000000E+00  COMBU23  NS10001
         Max   0.000000E+00  COMBU23  NS10001
```