International Journal of Fluid Power 4 (2003) No. 2 pp. 35-42

DEVELOPMENT OF A HYDRAULIC TELE-OPERATED CONSTRUCTION ROBOT USING VIRTUAL REALITY
(NEW MASTER-SLAVE CONTROL METHOD AND AN EVALUATION OF A VISUAL FEEDBACK SYSTEM)

Hironao Yamada and Takayoshi Muto

Department of Human and Information Systems, Gifu University, 1-1 Yanagido, Gifu 501-1193, Japan
yamada@cc.gifu-u.ac.jp

Abstract

In this study, we have developed a bilateral telerobotics system for a construction robot using virtual reality. The system consists of a servo-controlled construction robot, two joysticks for operation of the robot from a remote place, and a three degrees of freedom motion base. The operator of the robot sits on the motion base and controls the robot bilaterally from a remote place. The role of the motion base is to realistically simulate the motion of the construction robot. In this study, firstly, we propose a new method of master-slave control in order to make better feedback feeling of the reaction force to the joystick for the tele-operated construction robot. Secondly, we tested the visual feedback system for the construction robot using CCD video camera and computer graphics. For tele-operations, a video image of the operation field is normally projected onto a screen to assist the operator. In this study, an additional computer graphics (CG) was generated as a virtual robot to the real video image in order to present the end condition of the robot arm. The usefulness of the system is confirmed by the experiments in this study.

Keywords: telerobotic system, construction machine, master-slave control, virtual reality, hydraulic system, computer graphics

This manuscript was received on 01 October 2002 and was accepted after revision for publication on 26 May 2003

1 Introduction

A remote control system using bilateral control is useful for restoration work in a stricken area and also in extreme environments, such as space, the seabed, deep underground, etc (Sheridan, 1989; Burdea, 1996).

The aim of this study was to develop a telerobotic construction system which conveys an adequate enough sense of the operation field to the operator by using virtual reality technology. The bilateral construction robot that we constructed consists of a servo-controlled construction robot, two joysticks for bilateral control, a microphone, and a pair of stereo CCD cameras for remote control. The two joysticks control four hydraulic actuators via a computer. The system also has a 3-degree-of-freedom (DOF) motion base with a 3D vision system. The motion base simulates the motion of the robot system so that the operator can get a realistic sense of the operation field. The robot system is controlled bilaterally from a remote place.

In the development of this system, we proposed a new method of master-slave control for the hydraulic system, which can be used for construction robot. We also tested the visual feedback system for the construction robot using CCD camera and computer graphics. When the operator wears a manufactured HMD, he generally can not help feeling uncomfortable for it, and also receiving only a relatively narrow field of vision. Therefore we adopted a wide and open screen projector. For tele-operations, a video image of the operation field is normally projected onto a screen to assist the operator. In this case, the view angle of the operation field is fixed. If several video cameras from different directions are used, operator can easily recognize more detailed information of the operation field. However it is troublesome to set up several cameras and it makes cost up. Therefore we adopted computer graphics (CG) of the robot in addition to the video graphics. It is easy to generate CG images of construction robot which is observed from different directions. Thus, if in addition to the video graphics, CG of the robot were presented to the operator, the working efficiency would be expected to increase. For this purpose, a CG of a virtual robot was created. The following experiments demonstrate the

© 2003 TuTech

usefulness of our method of master-slave control and the visual feedback system using CG.

2 Tele-robotic System using Virtual Reality

Figure 1 shows a schematic diagram of the tele-robotic system developed in this research. The system is of a bilateral type and is thus divided into two parts, the master system and the slave system. Here, the slave system is a construction robot equipped with a pair of stereo CCD cameras. The master system is controlled by an operator and consists mainly of a manipulator and a screen. The robot has four hydraulic actuators controlled by four servo valves through a computer (PC1). Acceleration sensors were attached to the robot for feeding back the robot's movement to the operator. A stereo video image captured by two CCD cameras is transmitted to a 3D converter and then projected on the screen by the "Projector 1". Simultaneously, a signal synchronized with the video image is generated by a 3D converter and then transmitted to an infrared unit. This signal is used for alternating between left- and right-hand images of liquid crystal shutter glasses for the operator. Thus the operator's remote vision is stereoscopic.

On the other hand, the CG image of the robot that is, the virtual robot-is generated by a graphics computer (PC2), and then the image is superimposed onto the screen by projector 2. The motion of the virtual robot is generated according to the operation signal from two joysticks. That is, the signal from the joysticks are transmitted to PC2 through PC1 and LAN cable as shown in Fig. 1. And thus PC2 generates CG animation of the construction robot with calculating cylinder displacement.

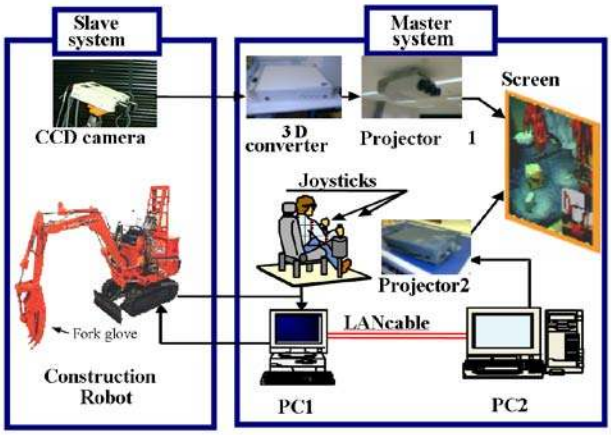

Fig. 1: *Tele-robotic construction system with virtual reality*

The manipulator controlled by the operator consists of two joysticks and a motion base on which a seat is set for the operator. The motion base (Fig. 2) provides 3 degrees of freedom, i.e. roll (±15˚), pitch (±15˚) and heave (100 mm), and can move in accordance with the motion of the robot. This means that the operator is able to feel the movement of the robot as if he was sitting on the seat of the robot (Zhao, 2002). In this study, however, evaluation of basic function of the master-slave control method and the visual presentation was the main purpose, and thus the function of the motion base was not used. Figure 3 shows the actual experimental system.

Figure 4 shows a schematic diagram of the joystick and construction robot. The DC motor is attached under the joystick, and reaction force is fed back to the operator through speed change gear. The joysticks can be operated in two directions along the X- and Y-axes. The displacements of the joysticks are detected by position sensors, while the displacements of the actuators are detected by magnetic stroke sensors embedded in the pistons. Figure 5 illustrates the control method of the robot in relation to the joysticks. In the figure the direction of the arrows shows X-Y axis of the joysticks.

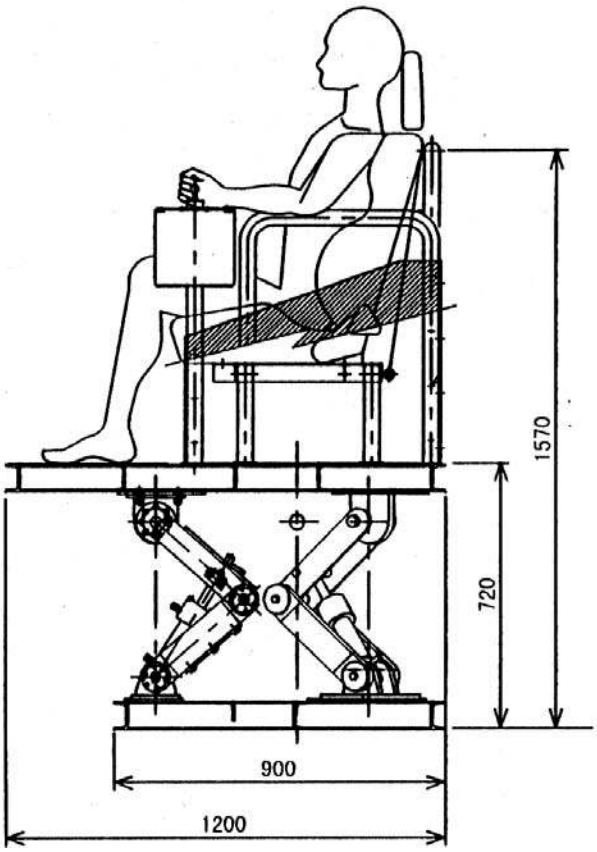

Fig. 2: *Three degrees of freedom motion base*

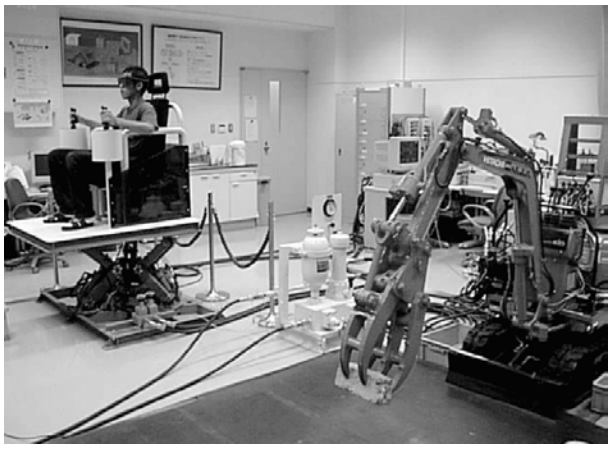

Fig. 3: *Construction robot system*

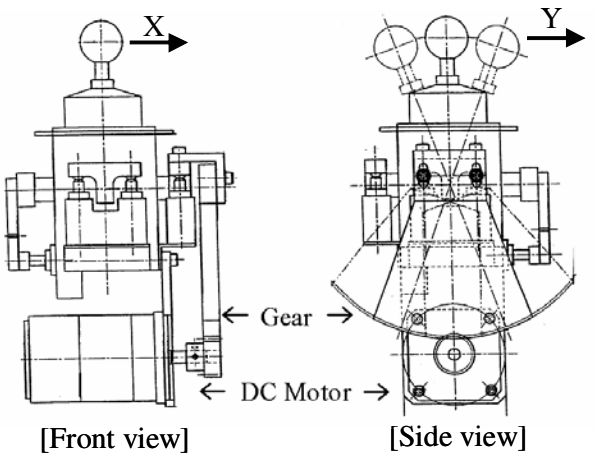

(a) Joystick

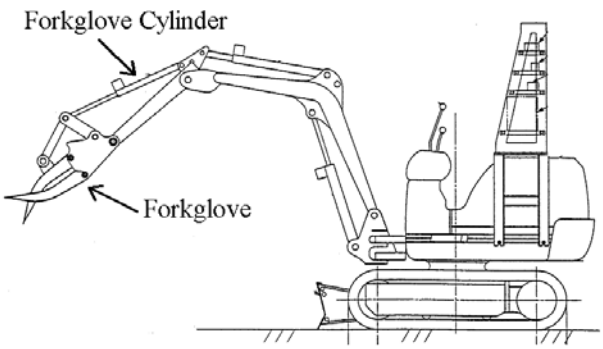

(b) Construction robot

Fig. 4: *Joystick and construction robot*

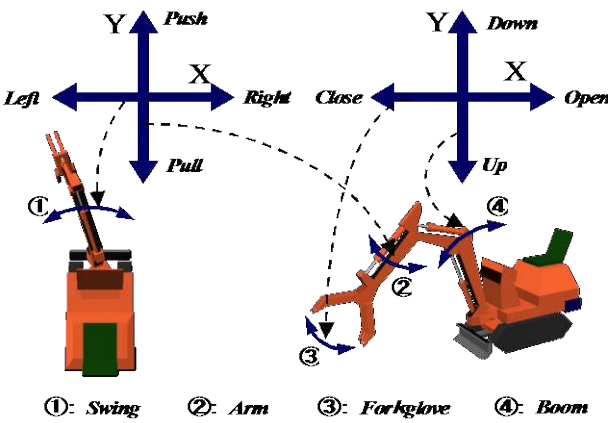

Fig. 5: *Control method of the construction robot in relation to the joysticks*

3 Master-slave Control Method

In this study, we applied a master-slave control method for the above system with the joysticks as the master and the construction robot as the slave, respectively. As a preparatory experiment, two types of conventional master-slave control algorithms, that are symmetric position servo control and force reflection control (Kato, 1990), are tested for the system. These algorithms have the following drawbacks: (1) The operator always feels that the joystick is heavy. (2) Then it makes the operator hard to detect the grasping moment or its stiffness. (3) In the case when the force reflection control is applied, oscillative tendency is observed when the operator does not tightly grasp the joysticks (Yamada, 1998 and 1999). Therefore, both methods of the symmetric position and force reflection control were not suitable for the hydraulic master-slave system. In this study, we propose a new algorithm of the variable gain symmetric position control, which can satisfactory transmit a feel of force and realize a stable control.

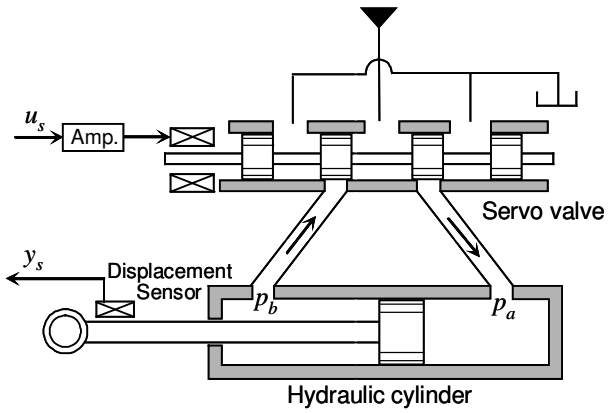

Fig. 6: *Schematic diagram of hydraulic cylinder*

Schematic diagram of hydraulic cylinder (slave actuator) is shown in Fig. 6. When the control input u_s from the controller is inputted to the servo valve amplifier, single-rod cylinder is driven. Driving force f_s of the cylinder is obtained from detected pressure p_a and p_b using cross-sectional areas of hydraulic cylinder a_a, a_b (i.e., $f_s = p_a\, a_a - p_b\, a_b$).

The schematic diagram for illustrating the variable gain symmetric position control algorithm is shown in Fig. 7.

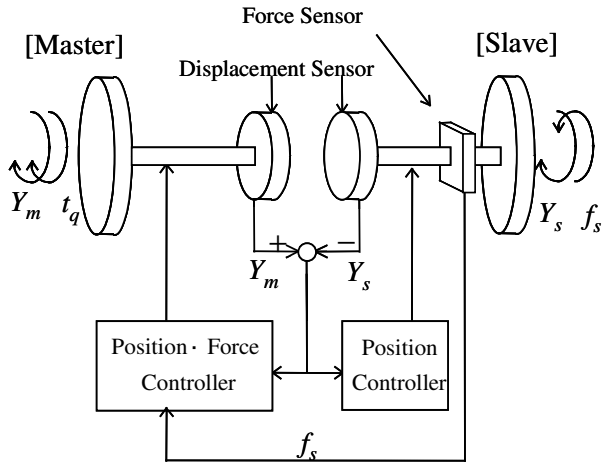

Fig. 7: *Variable gain symmetric position control*

In the master-slave control method, the slave displacement y_s is controlled to follow the master (joystick) displacement y_m. However, it is difficult to compare these displacements directly because the ranges of y_m

and y_s are different considerably. Therefore we adopted nondimensional displacements Y_m, Y_s instead of y_m, y_s. They are obtained by using nominal value of master and slave displacement y_{mo} (= 8.5 m), y_{so} (= 30×10^{-3} m), i.e., $Y_m = y_m / y_{mo}$, $Y_s = y_s / y_{so}$.

Equations of the control algorithm in order to obtain the control input u_m to the master joystick are as follows.

$$u_m = TK_{pm}(Y_s - Y_m) + TK_{dm}(\dot{Y}_s - \dot{Y}_m) \tag{1}$$

$$T = \begin{cases} 0 & (f_e \le f_s \le f_c) \\ 0 < \dfrac{f_s - f_e}{f_{e_max} - f_e} < 1 & (f_e < f_s) \\ 0 < \dfrac{f_s - f_c}{f_{c_max} - f_c} < 1 & (f_s < f_c) \end{cases} \tag{2}$$

When hydraulic cylinder is driven without any load, driving force f_s arises because of friction or viscous damping coefficient. Therefore conventional master-slave control methods have a problem that the reaction force to the joystick is generated before grasping the object because of the driving force. Therefore, the operator could not feel the grasping moment of the object or its stiffness. We propose a new algorithm of the variable gain symmetric position control.

Equation 2 means that the control input u_m equal to 0 while driving force f_s does not exceed the range of $f_e \le f_s \le f_c$, which means the external force does not act to the actuator. Where, f_e, f_c are driving force of the actuator without load when it is driven at maximum speed (f_e = 7.5 kN, f_c = -4.8 kN). The subscript 'e', 'c' correspond to the expanding/contracting action of the piston.

On the other hand, while the driving force f_s exceeds the range of $f_e \le f_s \le f_c$, feedback force is applied to the joystick in proportion to both the external force and the displacement deviation. Where f_{e_max}, f_{c_max} are maximum driving forces of the actuator with expanding/contracting action (f_{e_max} = 11.7 kN, f_{c_max} = -6.8 kN). These values are obtained when the piston is compulsorily locked. It is expected that the operation feeling is smooth while there is no external force and the operator can feel the stiffness of the object. Actually, f_e and f_c are varying according to the control voltage (i.e. piston speed). However, in the case of the system, piston is driven at relatively high speed, and thus there was no problem under the condition.

For controlling the slave side, the following equation is adopted.

$$u_s = K_{ps}(Y_m - Y_s) + K_{ds}(\dot{Y}_m - \dot{Y}_s) \tag{3}$$

From Eq. 3 the control input to the master joystick u_s is obtained and the displacement of hydraulic actuator Y_s is controlled to follow the master (joystick) displacement Y_m.

Figure 8 shows experimental result when the fork glove is grasping a concrete block. From Fig. 8(a), it is observed that the displacement of hydraulic actuator Y_s is following to the master (joystick) displacement Y_m. In Fig. 8(c), the thin and broken line denote f_e and f_c, respectively. It can be seen from the figure that the reaction force to the joystick is generated only when the fork glove is grasping the block and thus the operator can feel the grasping moment. The magnitude of the reaction force is large enough to feel the block is hard. Figure 9 shows experimental result when the fork glove is grasping a tire (i.e. a soft object). In this case, the magnitude of the reaction force is less compared with that of Fig. 8. This is because the transfer gain T of Eq. 2 changes with the driving force. Since the driving force for a soft object is less than that required for a hard object, the operator can feel the softness of the object through the force feedback.

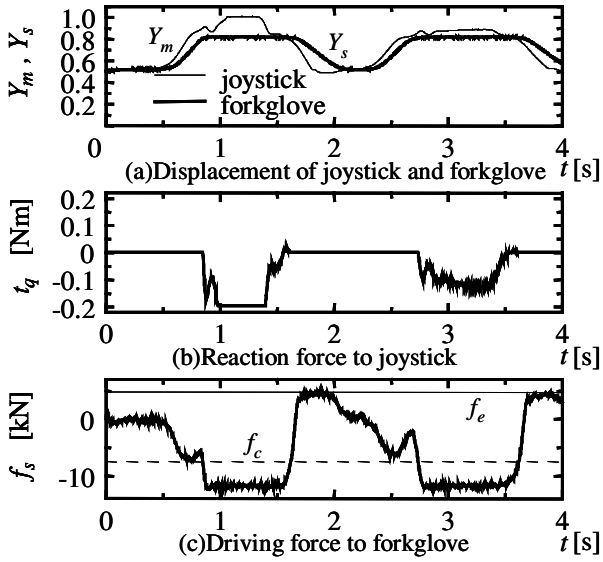

Fig. 8: *Grasping a concrete block*

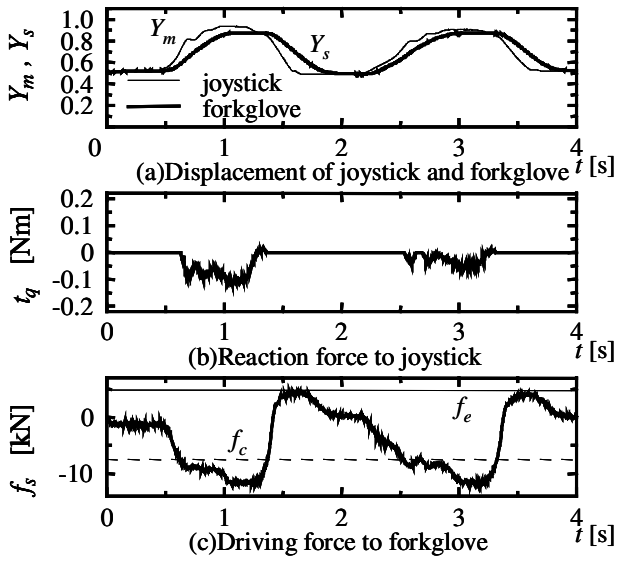

Fig. 9: *Grasping a tire*

4 Visual Feedback for Tele-operation of the Construction Robot

In this section we discuss the visual feedback method for tele-operation control of the construction robot. To

assist the operator, stereo video graphics of the operation field are projected onto a screen in front of the operator. In addition to the video graphics, if computer graphics of the robot were presented to the operator, the working efficiency would be expected to increase. For this purpose, CG are created as a virtual robot, and their effectiveness is estimated.

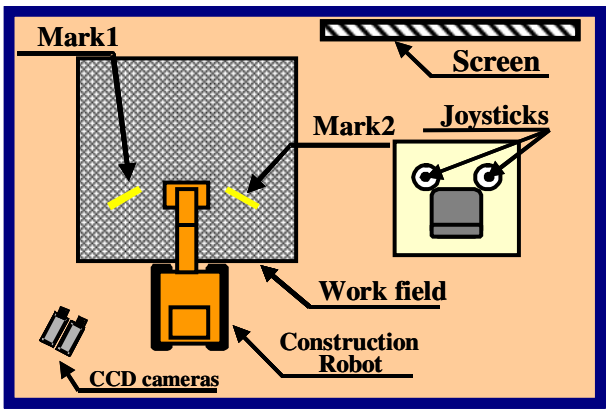

Fig. 10: *Top view of arrangement of the system*

Figure 10 shows a top view of the arrangement of the tele-robotic system. The robot is set at the left-hand side of the operation site. The operator controls the joysticks, watching the screen in front of him. The stereo CCD video cameras are arranged at the left-back side of the robot, and thus the operator observes the operation field from a back oblique angle through the screen. When the operator looks directly at the robot, he is actually looking from the right-hand side.

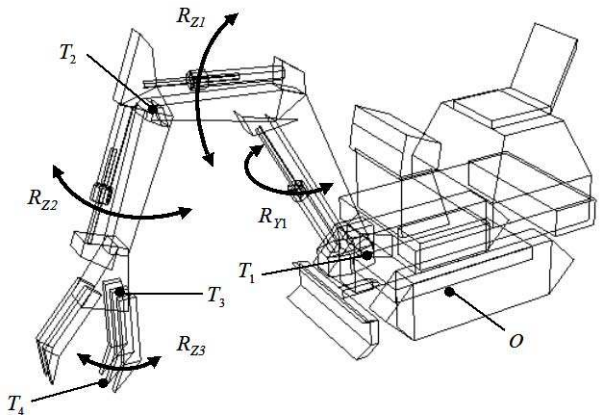

(a) Moving elements of the virtual robot

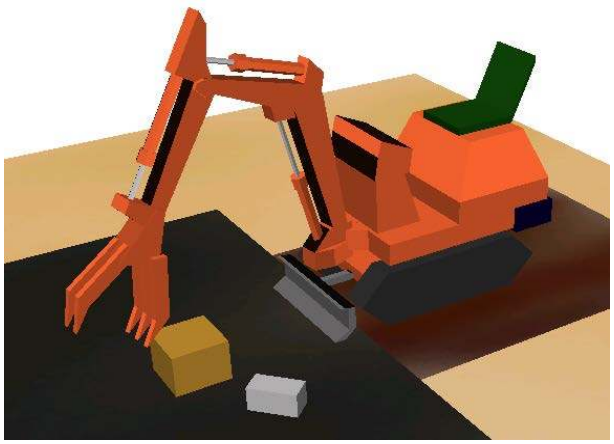

(b) CG image of the virtual robot

Fig. 11: *The virtual robot*

In this study, the video graphic image of the virtual robot was produced using a graphics library called Open-GL. The produced virtual robot is 1/200th the size of the real one, is composed of 350 polygons, and is able to move in real time. Figure 11(a) shows moving elements of the virtual robot. The four dots in the figure show the center of each rotational motion (T_1-T_4) of each of the four moving elements. Figure 11(b) shows a graphics image of the virtual robot.

In the experiment, the operator controls the robot by using the joysticks according to predetermined tasks. The tasks consist of two parts: Task 1 and Task 2. In the beginning, the robot is set at the neutral positions. In Task 1, the operator grasps a concrete block that is on a marked place in a task field. Then in Task 2, the operator carries the concrete block to another marked place and releases it. Since there is an obstacle in between the two marks, the operator has to avoid it.

With ten subjects serving as 3 amateur and 7 beginner operators of the robot, we measured the time it took each subject to complete Task 1 and Task 2. The subjects are composed of 8 males and 2 females, aged 22-30 years. Moreover, we counted the number of failed attempts – that is, when a subject could not succeed in completing a task.

In the experiments, two kinds of CG video images of the virtual robot are simultaneously presented to the operator. That is, one is a lateral view from the left-hand side (Fig. 12(a)) and the other is a rear view from the right-hand side (Fig. 12(b)). These view angles were selected so as to effectively back up the CCD video image. Figure 13 shows a projected image presented to the operator. Control conditions for the operator are shown in Table 1.

Figure 14 shows the average values of the tasking times that it took ten subjects to complete the assigned task. In the case of [2D], the tasking times of three kinds, that is Task 1, Task 2 and Total time, are always longer than those in [3D], [2D+VR], and [3D+VR] (under these three conditions, the graphs show nearly the same shape). This is thought to be due to the difficulty the operators had in getting a feeling for depth in the case of [2D] compared to the case of [3D]. In the case of [2D+VR], however, the operator can get a VR image of the robot, even in an instance where the robot is at a dead angle. Thus the working times in this case are considered to nearly coincide with those in [3D]. In the case of [2D], the operator has to estimate the depth information mainly from comparison of apparent size of objects and thus controls the construction robot by trial and error. Therefore it takes long time with 2D image presentation as shown in Fig. 14. In the case of [2D+VR], on the other hand, the operator can get the depth information from 2D CG images from different view angles.

Next, in order to see the effect of the VR image, the ratio of the tasking time for the [2D] or [3D] to that for [2D+VR] or [3D+VR], respectively, is calculated, and

the results are shown in Fig. 15. We can see in the figure that, in the case of [2D+VR], the efficiency is improved by 35 % (for Task 1) to 20 % (for Task 2) compared to [2D]. On the other hand, three efficiencies in [3D+VR] have almost the same value of Task 1. This is because the operators were able to get enough of a feeling for the depth through the 3D video image, so that the working times were no more shortened even with the VR image. However, according to the questionnaires to the operators about the operation feeling, a large majority of the subjects answered that the task is uncomfortable in the case of [3D] or [3D+VR] because the 3D glasses are tiring to wear. Therefore we think the usefulness of the additional CG image remains to be assessed.

(a) Lateral view from the left-hand side

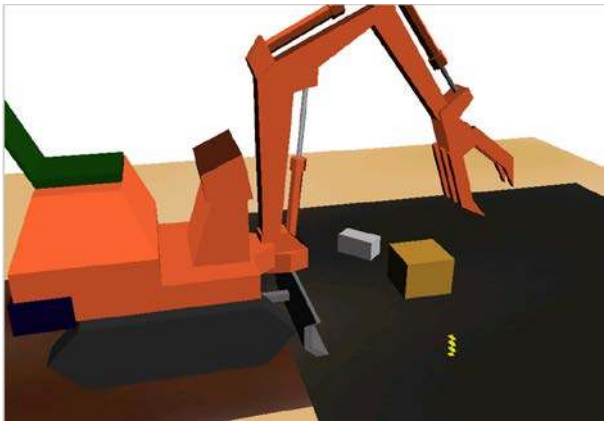

(b) Rear view from the right-hand side

Fig. 12: *Graphic image of the virtual robot*

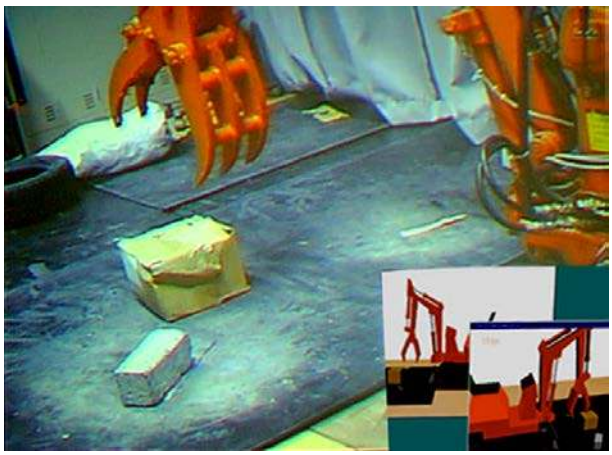

Fig. 13: *Image from the projectors*

Table 1: Control conditions for the operator

Abbreviation	Conditions
2D	Operator watches only a monocular vision given by a CCD camera.
3D	Operator watches only a stereo vision given by stereo CCD cameras.
2D+VR	Virtual robot is presented in addition to a “2D” video image.
3D+VR	Virtual robot is presented in addition to a “3D” video image.
Direct	Operator controls the robot directly without looking at any images.

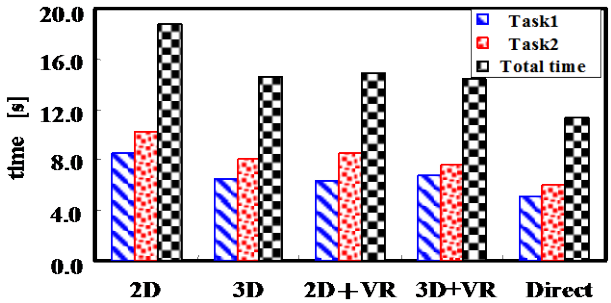

Fig. 14: *Average values of working times*

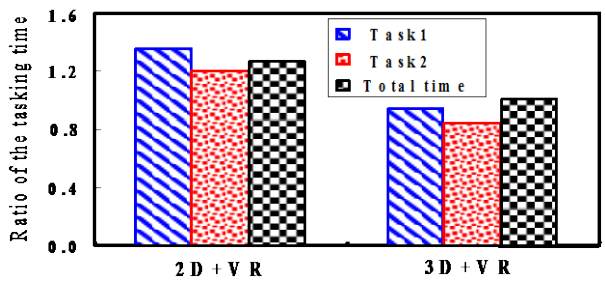

Fig. 15: *The ratio of tasking time to that of the VR*

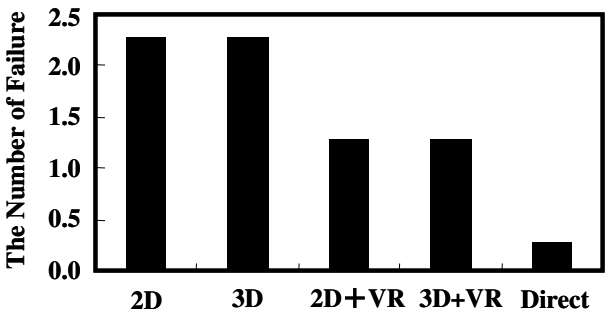

Fig. 16: *The number of failed attempts*

Figure 16 shows the average of the number of failed attempts. We can see in the figure that the number of failed attempts in [2D+VR] is nearly half that in [3D]. This is because the operators could recognize accurately the end position of the robot arm through the VR image.

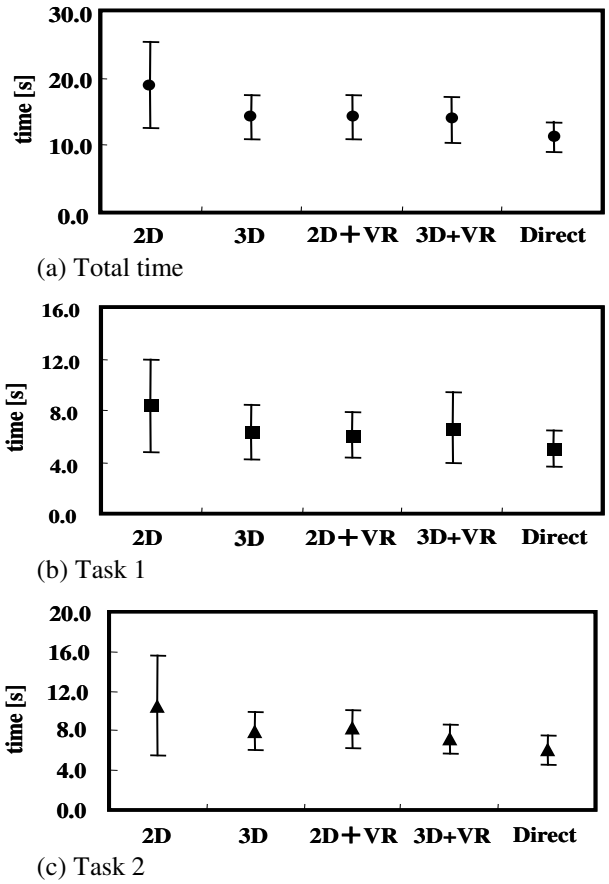

Fig. 17: *Standard deviation*

Figure 17(a), (b), and (c) show the dispersion of the working times with standard deviation. From these figures, we can say that each working time in [2D] varies widely. In the case of [3D] or [2D+VR], on the other hand, the dispersion is relatively small, a result of the stability of the tasks.

5 Conclusion

In this study, we have developed a hydraulic tele-operated construction robot with virtual reality. One of its main features is the master-slave control system. In order to transmit a sense of force and to realize stable control, the variable gain symmetric position control algorithm was proposed. The availability of the proposed method was examined by experiment and thus the validity of the method was confirmed.

We also investigated a method to allow the operator to get a better sense of presence of the operation field, in order to control the robot more effectively and stably. For this purpose, an additional CG image was generated as a virtual robot to the real video image. As a result of the experiment, it was clarified that working time was shortened effectively even for amateur operators. Thus, the usefulness of the developed CG system was confirmed.

In the present stage of the research, the CG image was simply superimposed on the video image. As a future work, we are planning to apply a mixed reality technology, in such a way that 3D CG and video image are composed with natural way in order to improve the user's sense of immersion.

Nomenclature

a_a, a_b	Cross-sectional areas of hydraulic cylinder	[m²]
f_c	Driving force to the actuator without load (contracting direction)	[N]
f_e	Driving force to the actuator without load (expanding direction)	[N]
f_{c_max}	Maximum driving force of the actuator (contracting direction)	[N]
f_{e_max}	Maximum driving force of the actuator (expanding direction)	[N]
f_m, f_s	Forces of master and slave	[N]
K_{pm}, K_{ps}	Proportional gains for master and slave controller	[V]
K_{dm}, K_{ds}	Derivative gains for master and slave controller	[V/s^{-1}]
p_a, p_b	Cylinder chamber pressures	[Pa]
T	Transfer gain for displacement and force	
t_q	Reaction torque to joystick	[Nm]
u_m, u_s	Control inputs to master and slave	[V]
Y_m, Y_s	Values of displacements of master and slave	[-]
y_m, y_s	Nondimensional displacements of master and slave	[m]
y_{mo}, y_{so}	Nominal values of master and slave displacements	[m]

References

Burdea, G. C. 1996. *Force and Touch Feedback for Virtual Reality*. Wiley-Interscience, New York.

Kato, I. et al. 1990. *Robotics Handbook.* Corona Publishing, Tokyo, Japan.

Sheridan, T. B., 1989. Telerobotics. *Automation*, Vol. 25, No. 4, pp. 487-507.

Yamada, H., Mukota, S., Zhao, D. and **Muto, T.** 1998. Construction Telerobot System with Virtual Reality (Development of a bilateral construction robot). *Proc. of VSMM98*, Vol. 1, pp. 152-157.

Yamada, H., Muto, T. and **Ohashi G.** 1999. Construction Telerobot System with Virtual Reality (Development of a bilateral construction robot), Development of a Telerobotics System for Construction Robot Using Virtual Reality. *European Control Conference ECC'99*, CD-ROM.

Zhao, D., Xia, Y., Yamada, H., and **Muto, T.** 2002. Presentation of realistic motion to the operator in operating a tele-operated construction robot. *Journal of Robotics and Mechatronics*, Vol. 14, No. 2, pp. 98-104.

Hironao YAMADA
(Born October 02, 1962) received the Doctor of Engineering degree from the Nagoya University Japan, in 1991. From 1991 to 1994, he worked in Nagoya University. From 1992 to 1993, he was a Visiting Research Fellow at the Aachen Institute of Technology, Germany. He is currently an Associate Professor in the department of mechanical and systems engineering, Gifu University.

Takayoshi MUTO
(Born March 31, 1941) received the Doctor of Engineering degree from the Nagoya University, in 1972. From 1963 to 1972, he worked in the department of mechanical engineering, Nagoya University. From 1981 to 1982, he was a Visiting Research Fellow at the Aachen Institute of Technology, Germany. He is currently a Professor in the department of mechanical and systems engineering, Gifu University.