NASA CONTRACTOR REPORT 177339 USAAVSCOM TR 84-A-7

(NASA-CR-177339-Vol-3) DEVELOPMENT OF ADOCS N87-17709
CONTROLLERS AND CONTROL LAWS. VOLUME 3:
SIMULATION RESULTS AND RECOMMENDATIONS
Final Report, Jan. 1981 - Jun. 1984 (Boeing Unclas
Vertol Co., Philadelphia, Pa.) 328 p G3/08 43366

IN-08

58114

P 328

DEVELOPMENT OF ADOCS CONTROLLERS AND CONTROL LAWS

VOLUME 3 - SIMULATION RESULTS AND RECOMMENDATIONS

PUBLICLY RELEASED ON MAR 1987

Kenneth H. Landis
Steven I. Glusman

APR 1985
RECEIVED
NASA STI FACILITY
ACCESS DEPT.

release March 1987.

CONTRACT NAS2– 10880
March 1985

NASA

United States Army
Aviation Systems
Command
St. Louis, Missouri 63120

NASA CONTRACTOR REPORT 177339

USAAVSCOM TR-84-A-7

DEVELOPMENT OF ADOCS CONTROLLERS AND CONTROL LAWS

VOLUME 3 - SIMULATION RESULTS AND RECOMMENDATIONS

Kenneth H. Landis
Steven I. Glusman
Boeing Vertol Company
Philadelphia, PA 19142

Prepared for
Aeromechanics Laboratory
U.S. Army Research and Technology
Laboratories (AVSCOM)
under Contract NAS2-10880

National Aeronautics and
Space Administration

Ames Research Center
Moffett Field, California 94035

United States Army
Aviation Systems
Command
St. Louis, Missouri 63120

TABLE OF CONTENTS

PAGE

LIST OF ILLUSTRATIONS vii

LIST OF TABLES xi

ACRONYMS xiii

NOMENCLATURE xv

1.0 SUMMARY 1

2.0 INTRODUCTION 3

3.0 EXPERIMENT DESIGN 5

- 3.1 Side-Stick Controller Configuration 7
- 3.2 Stability and Control Augmentation System (SCAS) Characteristics 12
  - 3.2.1 Primary Flight Control System (PFCS).. 15
  - 3.2.2 Automatic Flight Control System (AFCS) 15
- 3.3 Visual Display and Visual Aids 22

4.0 CONDUCT OF EXPERIMENT 27

- 4.1 Facility Description 27
  - 4.1.1 Boeing Vertol Flight Simulator Facility 27
  - 4.1.2 NASA-Ames Vertical Motion Simulator .. 30
- 4.2 Aircraft Math Model 36
- 4.3 Evaluation Tasks 42
  - 4.3.1 Low-Speed Tasks 42
  - 4.3.2 High-Speed Tasks 44
  - 4.3.3 Transition Tasks 46
- 4.4 Pilot's Experience Summary 46
- 4.5 Data Collection and Analysis 46
- 4.6 Other Experimental Considerations 50

5.0 PHASE 1 SIMULATION RESULTS 51

- 5.1 Controller Development 51
  - 5.1.1 Selection of Control Response Characteristics 51
  - 5.1.2 Evaluation of Force/Deflection Characteristics 57
- 5.2 Evaluation of Controller/SCAS Configuration Matrix 63

PRECEDING PAGE BLANK NOT FILMED

Table of Contents (Continued)

PAGE

5.2.1 4-Axis Controller Evaluation 63
5.2.2 Controller Configuration/Display Effects 65
5.2.3 SCAS Effects 71

6.0 PHASE 2 SIMULATION RESULTS 79

6.1 Simulator Effects 83
6.1.1 Effect of Simulator Visual Display/ Motion System 83
6.1.2 Modification of Control Response Shaping 86
6.2 Controller Evaluations 88
6.2.1 Controller Orientation 91
6.2.2 Alternate 4-Axis Controller Comparison 91
6.2.3 Left-Hand Vertical Side-Stick Controller Evaluation 95
6.2.4 ADOCS Brassboard Controller Evaluation 96
6.2.5 Alternate Grip Comparison 96
6.3 Controller/SCAS Configuration Effects 100
6.3.1 Low-Speed Tasks 100
6.3.2 Slalom Tasks 111
6.3.3 Approach-to-Hover Tasks 119
6.4 IMC/VMC Comparison 122

7.0 SUMMARY OF PILOT EVALUATION DATA 125

7.1 Summary of Pilot Ratings 125
7.1.1 Task/Display Effects 125
7.1.2 SCAS Effects 129
7.1.3 Controller Effects 133
7.2 Pilot Commentary 136

8.0 CONCLUSIONS 143

8.1 Side-Stick Controller Design 143
8.2 Controller Configuration 143
8.3 SCAS Design 144
8.4 IMC Display Effects 145

9.0 RECOMMENDATIONS 147

9.1 Controller Design 147
9.2 Control Law Design 147
9.2.1 PFCS Design 150
9.2.2 AFCS Design 151
9.3 Display System 155

Table of Contents (Continued)

PAGE

REFERENCES 158

APPENDIX A - Control Law Diagrams A-1

APPENDIX B - Trim Data And Stability and Control Derivatives B-1

APPENDIX C - Pilot Rating Data C-1

LIST OF ILLUSTRATIONS

FIGURE PAGE

3-1 Three Dimensional Flight Control System Description 6
3-2 Phase 1 Candidate Controller Configurations . 8
3-3 Phase 2 Candidate Controller Configurations . 9
3-4 ADOCS Flight Control System Concept 13
3-5 Generic SCAS Configurations Command Response/Stabilization Matrix 14
3-6 Generic Lateral SCAS 16
3-7 ADOCS PFCS Design 17
3-8 ADOCS Longitudinal AFCS - ACC/AFCS Phase 2B . 19
3-9 ADOCS Lateral AFCS - ACC/AFCS Phase 2B 20
3-10 ADOCS Directional AFCS - ACC/AFCS Phase 2B .. 21
3-11 ADOCS Vertical AFCS - ACC/AFCS Phase 2B 23
3-12 Head Tracker Equipment Installation 25
4-1 Boeing Vertol Small Motion Flight Simulation Facility with Multi-Window Display ... 28
4-2 Approach to Airport Scene - Boeing Vertol Simulator 31
4-3 IHADSS Hover Mode Symbology 32
4-4 Visually Coupled System for Attack Helicopters 33
4-5 ACC/AFCS Terrain Board 34
4-6 NASA-Ames Vertical Motion Simulator 35
4-7 CGI Display - NOE Course 37
4-8 CGI Display - Airfield Runway for Slalom Task 38
4-9 UH-60 Simulation Math Model Correlation with Flight Test Data 39

PRECEDING PAGE BLANK NOT FILMED

List of Illustrations (Continued)

FIGURE		PAGE
4-10	UH-60A Simulation Math Model Correlation	41
4-11	Low-Speed Evaluation Tasks	43
4-12	High Speed and Transition Tasks	45
4-13	Sample Controller/SCAS Configuration Matrices - NOE Task	49
5-1	Phase 1 Simulation Flow Diagram	52
5-2	Control Response Selection Process	54
5-3	Selection of Roll Rate Command Sensitivity ..	55
5-4	Force Control Response Shaping	58
5-5	ACC/AFCS Candidate SSC Controller Force/Deflection Characteristics	59
5-6	Phase 1 4-Axis Side-Stick Controllers	60
5-7	Effect of Side-Stick Controller Deflection/Force Gradient On Pilot Ratings ..	61
5-8	Controller Comparison - Stiff Stick vs. Small Deflection	64
5-9	Pilot Ratings - NOE Task	66
5-10	Pilot Ratings - Bob-up Task	67
5-11	Pilot Ratings - Acceleration/ Deceleration Task	69
5-12	Pilot Ratings - 30-Knot Slalom Task	70
5-13	Time History of Bob-Up - RA/LV	73
5-14	Time History of Bob-Up - AT/LV	74
5-15	Bob-Up Task Performance	75
5-16	Effect of Yaw SCAS Variations on Pilot Ratings	77

List of Illustrations (Continued)

FIGURE		PAGE
5-17	Effect of Vertical SCAS Variations On Pilot Ratings	78
6-1	Variations in IHADSS Symbology	81
6-2	Phase 2 4-Axis Side-Stick Controllers	82
6-3	LSI Brassboard Controller with Experimental Grip	84
6-4	Simulation Facility Comparison	85
6-5	Longitudinal and Lateral Attitude Command System Response Shaping Functions ..	87
6-6	Directional and Vertical Rate Command System Response Shaping Functions	89
6-7	Effect of Vertical Shaping Changes	90
6-8	Side-Stick Controller Orientations	92
6-9	SSC Installation Comparison	93
6-10	4-Axis Controller Comparison	94
6-11	Left-Hand Vertical Controller Comparison	97
6-12	4-Axis Controller Comparison	98
6-13	Grip Comparison	99
6-14	Summary of Pilot Data For Low Speed Tasks ..	101
6-15	Time History of NOE Task - IMC - RA/AT System	102
6-16	Time History of NOE Task - IMC - AT/LV System	103
6-17	Pilot Ratings for Precision Hover Task - IMC	105
6-18	Pilot Ratings for Bob-Up Task - IMC	106
6-19	Effect of Directional SCAS Variations On Pilot Ratings	107
6-20	Effect of Vertical SCAS Variations On Pilot Ratings	108

List of Illustrations (Continued)

FIGURE PAGE

6-21 Pilot Ratings for NOE Task - IMC 110

6-22 Effect of Turbulence on Bob-Up Performance .. 112

6-23 Pilot Ratings for Slalom Task - IMC 114

6-24 Time History of 30-Knot Slalom Task-IMC-AT/LV System 115

6-25 Time History of 30-Knot Slalom Task-IMC-RA/AT System 116

6-26 Pilot Ratings for High-Speed Slalom Task - VMC 117

6-27 Effect of Automatic Turn Coordination On Pilot Ratings 118

6-28 Pilot Ratings for Approach to Hover Tasks ... 121

6-29 Comparison of IMC and VMC Pilot Ratings - NOE Task 123

7-1 Summary of Task Effect On Pilot Ratings - Phase 1 126

7-2 Summary of Task Effect On Pilot Ratings - Phase 2 127

7-3 Effect of Task On Pilot Ratings 128

7-4 Summary of Primary SCAS/Controller Effects - Phase 1 130

7-5 Summary of Primary SCAS/Controller Effects - Phase 2 131

7-6 Summary of Primary SCAS Configuration on Pilot Ratings 132

LIST OF TABLES

TABLE		PAGE
3-1	4-Axis Controller Configurations Force Deflection Characteristics	11
4-1	Boeing Vertol Simulator Motion Limits	29
4-2	Summary of Evaluation Test Pilots Experience	42
5-1	Selected Control Response Characteristics	56
7-1	Controller Configuration Rankings - Phase 1	134
7-2	Controller Configuration Rankings - Phase 2	135
7-3	Pilot Comments On Controllers	137
7-4	Pilot Comments On Controller Configurations	138
7-5	Pilot Comments On Primary SCAS Configurations	139
7-6	Pilot Comments On Secondary SCAS Configurations	140
7-7	Pilot Comments - Other Factors	141
9-1	Recommend 4-Axis Controller Force/ Displacement Characteristics	148
9-2	Recommended Alternate Controller Force/ Displacement Characteristics	149
9-3	Basic SCAS Modes	152
9-4	Selectable SCAS Modes	153

ACRONYMS

AAH	Advanced Attack Helicopter
AC/RA	Acceleration Command/Rate Stabilization
ACC/AFCS	Advanced Cockpit Controls/Advanced Flight Control System
ADOCS	Advanced Digital/Optical Control System
AFCS	Automatic Flight Control System
AFFDL	Air Force Flight Dynamics Laboratory
AGL	Above Ground Level
ASH	Advanced Scout Helicopter
AT/AT	Attitude Command/Attitude Stabilization
AT/LV	Attitude Command/Velocity Stabilization
CHR	Cooper-Harper Rating
CMD/STAB	Command/Stabilization
EASY5	Engineering Analysis System Rev. 5
FBW	Fly-by-Wire
HLH	Heavy Lift Helicopter
HMD	Helmet Mounted Display
HMS	Helmet Mounted Sight
IHADSS	Integrated Helmet and Display Sighting System
IMC	Instrument Meterological Conditions
LCC	Load-Controlling Crewman
LV/LV	Velocity Command/Velocity Stabilization
LV/PH	Velocity Command/Position Hold
NAE	National Aeronautical Establishment
NOE	Nap-of-the-Earth
PFCS	Primary Flight Control System
PIO	Pilot Induced Oscillations

PRECEDING PAGE BLANK NOT FILMED

Acronyms (Continued)

PNVS	Pilot Night Vision System
PSD	Power Spectral Density
RAE	Royal Aircraft Establishment
RA/AT	Rate Command/Attitude Stabilization
SCAS	Stability and Control Augmentation System
SD	Small Deflection
SS	Stiff Stick
SSC	Side-Stick Controller
TAGS	Tactical Aircraft Guidance System
VMC	Visual Meterological Conditions
VMS	Vertical Motion Simulator

NOMENCLATURE

C(s)	Command Model Transfer Function
D(s)	Desired Response Transfer Function
DELB	Pilot Longitudinal Cyclic Input (in)
DELC	Pilot Collective Input (in)
DELR	Pilot Pedal Input (in)
DELS	Pilot Lateral Cyclic Input (in)
g	Acceleration of Gravity (ft/sec^2)
H(s)	Stabilization Loops Transfer Function
h	Radar Altitude (ft)
$\dot{h}$	Vertical Velocity (ft/sec)
$\ddot{h}$	Vertical Acceleration (ft/sec^2)
IHT	Incidence of Horizontal Tail (deg)
K_θ	Pitch Attitude Feedback Gain (in/rad)
K_ϕ	Roll Attitude Feedback Gain (in/rad)
K_ψ	Heading Feedback Gain (in/rad)
K_q	Pitch Rate Feedback Gain (in/rad/sec)
K_p	Roll Rate Feedback Gain (in/rad/sec)
K_r	Yaw Rate Feedback Gain (in/rad/sec)
K_{SS}	Steady State Response Sensitivity
L/IXX	Normalized Rolling Moment (ft.lb/slug.ft^2)
M/IYY	Normalized Pitching Moment (ft.lb/slug.ft^2)
M_r	Stability Derivative, Pitching Moment Due to Yaw Rate
M_{δ_B}	Control Sensitivity - Pitching Moment due to Longitudinal Cyclic Input
N/IZZ	Normalized Yawing Moment (ft.lb/slug.ft^2)

NOMENCLATURE (continued)

N_{δ_R}	Control Sensitivity - Yawing Moment Due to Pedal Input (ft.lb/in)
N_r	Stability Derivative - Yawing Moment Due to Yaw Rate (ft.lb/(rad/sec))
p	Aircraft Body-axis Roll Rate (rad/sec)
$P(s)$	Plant Transfer Function
q	Aircraft Body-axis Roll Rate (rad/sec)
r	Aircraft Body-axis Yaw Rate (rad/sec)
r_c	Commanded Yaw Rate (rad/sec)
RL	Rate Limiter
u	Aircraft Body-axis Longitudinal Velocity (ft/sec)
v	Aircarft Body-axis Lateral Velocity (ft/sec)
w	Aircraft Body-axis Vertical Velocity (ft/sec)
X/M	Normalized Longitudinal (lb/slug)
Y/M	Normalized Lateral (lb/slug)
Z/M	Normalized Vertical Force (lb/slug)
ϕ	Aircraft Roll Attitude (rad)
ϕ_c	Commanded Roll Attitude (rad)
ψ	Heading (rad)
$\dot{\psi}$	Yaw Rate - Earth Axis (rad/sec)
$\ddot{\psi}$	Yaw Acceleration - Earth Axis (rad/sec^2)

1.0 SUMMARY

As part of the U.S. Army's Advanced Digital/Optical Control System (ADOCS) Program, a series of piloted simulations was conducted during the ACC/AFCS study to develop the integrated side-stick controller characteristics and flight control laws to be implemented on the ADOCS demonstrator helicopter. Effects on handling qualities of side-stick controller characteristics and the level of stability and control augmentation were evaluated for several low-altitude maneuvering and precision hover flight tasks. Tasks were performed under both simulated visual meteorological conditions (VMC) and instrument meteorological conditions (IMC). Visual cues for VMC flight were provided to the pilot using the simulator multi-window, wide-angle, cockpit visual display system. For IMC flight, the only source of visual information was a visually coupled, helmet-mounted display of flight control symbols superimposed upon terrain board imagery.

The Advanced Cockpit Controls/Advanced Flight Control System (ACC/AFCS) element of the ADOCS Program was conducted in two separate phases consisting of preliminary control law analysis and development designated as Phase 1, followed by a detailed control law development phase designated as Phase 2.

Data provided through the literature review and preliminary analysis phase of study (reported in Volume 2) established specific controller/control law configurations and characteristics to be evaluated through piloted simulation. Five major piloted simulation phases were completed between June 1981 and May 1983. Three simulation periods were conducted as part of Phase 1 at the Boeing Vertol Simulation Facility, followed by two simulation periods conducted as part of Phase 2 at the NASA-Ames Vertical Motion Simulator (VMS) facility. The most significant results from these five piloted simulations are summarized below.

Side-Stick Controller

1. Pilot ratings and comments showed that handling qualities improved substantially with the introduction of small deflection in all control axes of the side-stick controller.

2. The (3+1) Collective and (2+1+1) separated controller configuration achieved similar overall pilot ratings which were generally improved compared to the integrated four-axis controller configuration. A separated collective controller was found to eliminate unintentional collective to pitch/roll coupling common to the (4+0) and (3+1) Pedal configurations. Separated controller configurations were felt to reduce pilot workload especially for multiaxis

tasks by eliminating requirements to hold forces in the vertical or directional axes while modulating pitch and roll control.

3. A small deflection, left-hand collective controller was preferred over a stiff controller for vertical control. The addition of deflection to the left-hand controller improved pilot ratings and task performance when accurate control of aircraft height was required.

SCAS/Display System Interactions

1. IMC ratings were degraded compared to VMC ratings approximately 1.6 points on the Cooper-Harper rating scale for the most difficult task. Average ratings did not vary significantly as a function of VMC task; however, task variation had a larger effect on pilot ratings under IMC with the IHADSS. The largest degradation in IMC pilot ratings occurred for the NOE Task.

2. Best ratings were achieved for the forward flight/transition tasks with a hybrid SCAS system in pitch and roll--pitch attitude command/airspeed hold (AT/AS) and roll rate command/attitude stabilization (RA/AT) in forward flight; and attitude command/ground speed stabilization (AT/LV) in pitch and roll for low speed flight. Control law logic to automatically switch between forward flight and low speed stability and control augmentation characteristics was successfully implemented and tested. The method developed to switch control laws felt natural to the pilot and no undesirable effects on handling qualities were evident during transition maneuvers. With this hybrid system, Level 1 ratings were achieved with all controller configurations under VMC and marginal Level 2 ratings obtained under IMC. Level 1 ratings were achieved under IMC only for the Precision Hover and Bob-up Tasks with the two velocity command investigated.

3. Automatic turn coordination for forward flight maneuvering tasks improved pilot ratings by approximately 2.0 rating points for all controller configurations and significantly reduced pilot workload.

2.0 INTRODUCTION

In addition to the literature search and preliminary analysis conducted as part of the Advanced Cockpit Controls/Advanced Flight Control System (ACC/AFCS) program, five piloted simulations were conducted to evaluate the system concepts previously developed. Volume 2 documented the results of the literature search and analysis and presented concluding remarks which were used in the simulation test plan development.

Results of the five piloted simulations are presented in this volume. The objective of these studies was to identify combinations of cockpit controller configuration, flight control laws, and display system requirements to achieve satisfactory handling qualities for the attack helicopter mission defined for the ADOCS demonstrator aircraft.

Data presented in this volume are organized by simulation phase. Phase 1 simulations concentrated on controller development, response sensitivity selection, and data collection for low-speed tasks representative of the attack helicopter mission. All three Phase 1 simulations were conducted at the Boeing Vertol Flight Simulator; both Phase 2 simulations were conducted at the NASA-Ames Vertical Motion Simulator (VMS). In addition to collecting additional low-speed data, Phase 2 studies included the investigation of high-speed and transition flight regimes also associated with the attack helicopter mission.

A total of seven simulation test pilots participated in these five simulations providing over 2000 data points defining the interrelationship between cockpit controller configuration, SCAS, and display system. Data are presented in this volume in a manner which emphasizes overall trends in the SCAS, controller, and display system designs.

These data were utilized to make recommendations for the implementation of ADOCS on a demonstrator UH-60A aircraft. The final section of this report presents these recommendations.

3.0 EXPERIMENT DESIGN

Pilot workload and level of performance achieved during a specific attack helicopter mission task are influenced by combined elements of the helicopter control/display system design. The primary elements considered during this simulation program were:

(1) Side-stick Controller (SSC) Configuration - Stiff or displacement type, and level of integration ranging from a fully-integrated 4-axis side-stick controller to a (2+1+1) arrangement; i.e., a 2-axis side-stick for pitch and roll control with separated directional pedals and a left-hand collective controller.

(2) Stability and Control Augmentation System (SCAS) Characteristics - Several generic types of feedback stabilization and feed-forward command shaping in each of the four control axes (pitch, roll, yaw, and vertical).

(3) Visual Display - Either day VMC with the simulator four-window, wide angle field-of-view visual system, or night IMC using a simulated FLIR image and superimposed YAH-64 Pilot Night Vision System (PNVS) (Reference 1) symbology presented on a helmet-mounted display.

General Approach

The systematic approach to the investigation of these elements is illustrated in Figure 3-1. The overall investigation was directed toward defining those combinations of SSC, SCAS, and display that produce Level 1, 2, and 3 handling qualities ratings (Reference 2).

In applying this general approach to the specific problem, the blocks defined in Figure 3-1 were broken down further into more detailed configuration matrices. For example, each side-stick controller configuration block contains variations in force/displacement relationships as well as ergonomic characteristics. Generic control laws can be mechanized in several different ways with significantly different results. Display symbology involves a myriad of variations in parameters, format, scaling, and logic.

Degraded modes can also be visualized in Figure 3-1. Since the selected controller configuration will be part of the primary flight control system, all allowable degraded modes will lie in the control-law/display-law plane. For example, certain failures such as FLIR loss will affect the display axis only, while loss of a ground velocity signal may affect the system control law and display symbology.

By considering the overall system design as a series of matrix levels of increasing detail, the interactive effect on handling

PRECEDING PAGE BLANK NOT FILMED

PAGE V INTENTIONALLY BLANK

THREE DIMENSIONAL FLIGHT CONTROL SYSTEM DESCRIPTION

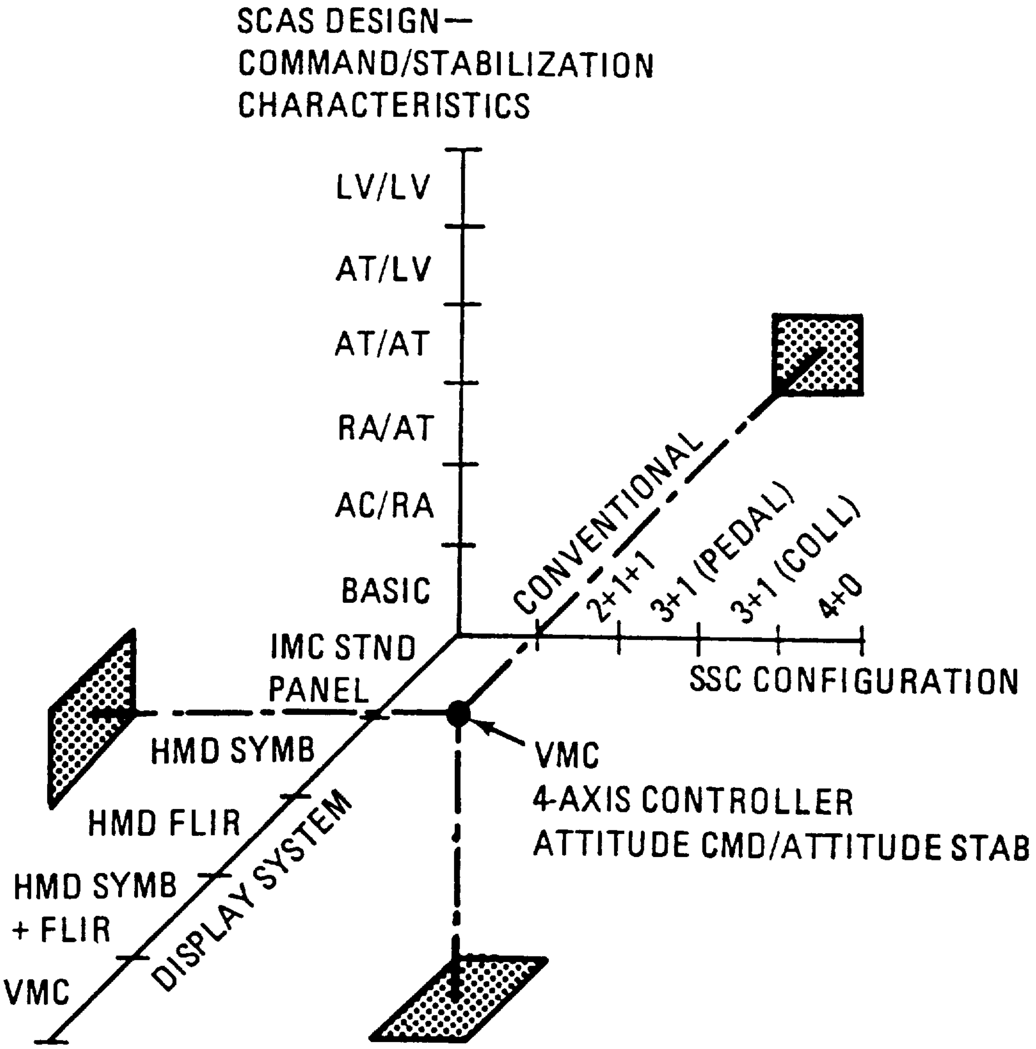
SCAS DESIGN—
COMMAND/STABILIZATION
CHARACTERISTICS
LV/LV
AT/LV
AT/AT
RA/AT
AC/RA
BASIC
CONVENTIONAL
2+1+1
3+1 (PEDAL)
3+1 (COLL)
4+0
SSC CONFIGURATION
IMC STND
PANEL
HMD SYMB
HMD FLIR
HMD SYMB
+ FLIR
VMC
DISPLAY SYSTEM
VMC
4-AXIS CONTROLLER
ATTITUDE CMD/ATTITUDE STAB

Figure 3-1

qualities of each variation in an element of the system is kept in perspective. A discussion of important issues to be considered within each primary system element follows, including specific details about the controller/SCAS/display characteristics evaluated.

3.1 SIDE-STICK CONTROLLER CONFIGURATION

The experiment was designed to provide a comprehensive evaluation of multi-axis side-stick control for an attack helicopter mission including variations in: (1) the number of axes controlled through the side-stick device, and (2) the force-deflection characteristics of the controller.

Level of integration (Number of Axes)

Four variations in controller configuration representing different levels of controller integration were investigated:

1. (4+0): All control axes (pitch, roll, yaw, and vertical) on the side-stick controller,
2. (3+1) Collective: 3-axis side-stick for pitch, roll and yaw control, and a separate left-hand collective controller for vertical control,
3. (3+1) Pedal: 3-axis side-stick for pitch, roll and vertical control, and pedals for directional control, and
4. (2+1+1): 2-axis side-stick for pitch and roll control, with a separate collective controller for vertical control, and pedals for directional control.

The above notations for controller integration level are used throughout the report to identify the various controller configurations.

The four controller configurations evaluated during Phase 1 are illustrated in Figure 3-2 with the left-hand controller implemented using a conventional collective lever as a force controller. During Phase 2 a side-stick controller replaced the collective lever as the left-hand vertical controller as shown in Figure 3-3. The (3+1) Pedal configuration was not included in Phase 2 simulations because of the negative pilot comments and poor pilot ratings received during Phase 1 simulations with this configuration.

Force/Deflection Characteristics

A definition of acceptable/unacceptable ranges of force/deflection gradient for each controller configuration option ((4+0), (3+1), or (2+1+1)) was necessary. The determination of force/deflection characteristics was performed during the course of

PHASE 1 CONTROLLER CONFIGURATIONS

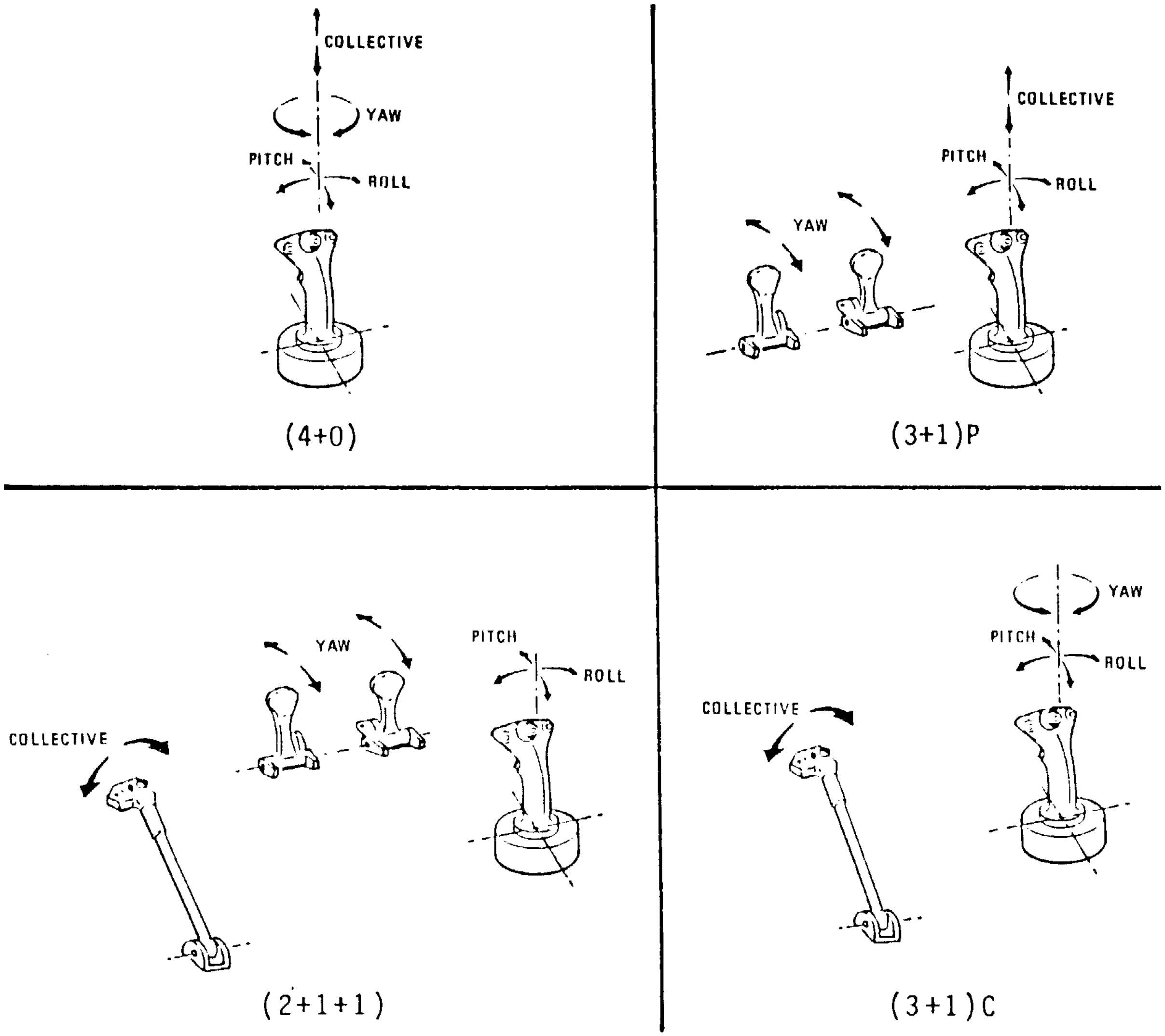
COLLECTIVE
YAW
PITCH
ROLL
COLLECTIVE
PITCH
ROLL
YAW
YAW
PITCH
ROLL
COLLECTIVE
YAW
PITCH
ROLL
COLLECTIVE

(4+0)

(3+1)P

(2+1+1)

(3+1)C

Figure 3-2

PHASE 2 CONTROLLER CONFIGURATIONS

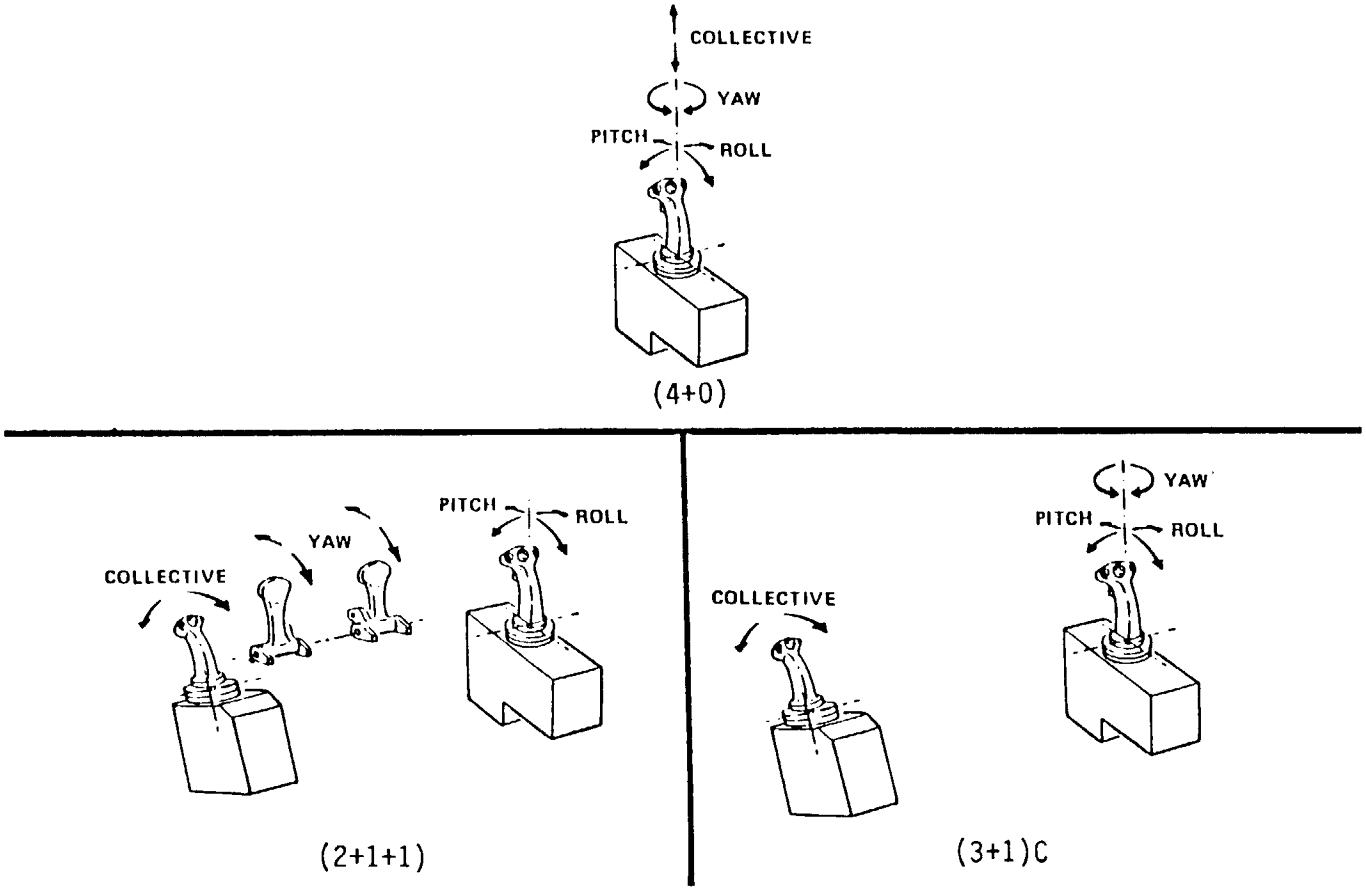
COLLECTIVE
YAW
PITCH
ROLL
(4+0)
COLLECTIVE
YAW
PITCH
ROLL
(2+1+1)
YAW
PITCH
ROLL
COLLECTIVE
(3+1)C

Figure 3-3

this simulation study using seven 4-axis side-stick controllers described in Table 3-1. Force/deflection characteristics for each controller are presented including operating force range, maximum deflection, and force/deflection gradient.

All 4-axis controllers are a base-pivot type for pitch and roll motion. Fore-aft force produces a longitudinal control input and right-left force a lateral control input. Yaw control is obtained by twisting about the grip centerline, and vertical control through application of pure up and down forces.

The selection of pitch and roll force/deflection gradients was guided by a review of published data (Volume 2). Gradients were chosen to cover a wide range from a "stiff" force gradient with very small deflection to a "soft" force gradient with large deflection (±12 degrees). Five 4-axis controller designs were evaluated during Phase 1 using a stiff-stick force controller, two small-deflection controller configurations, and a medium- and large-deflection configuration both obtained using the HLH prototype variable-force controller.

Yaw and vertical controller compliance for both small-deflection configurations were relatively "stiff" compared to the pitch and roll axes. In contrast, the medium-and large-deflection configurations were evaluated with lighter yaw and vertical force/deflection gradients for harmony with pitch and roll.

Based on Phase 1 results, a modified 4-axis controller having small-deflection in all axes was fabricated for Phase 2 testing. An ADOCS demonstration brassboard controller having very similar characteristics was also available for evaluation during Phase 2.

Evaluation of the (3+1) Collective, (3+1) Pedal, and (2+1+1) controller configurations was performed during Phase 1 using a conventional collective lever and directional pedal controls. The simulator variable force-feel collective lever was implemented as a "stiff" force controller with small deflection. A force pedal control system was configured using a mechanical spring capsule attached directly to the pedals. The directional pedal configuration selected had a force/deflection gradient of 40 lbs/inch with a force breakout of 6.0 lbs.

The implementation of a left-hand side-stick controller for vertical control was tested during Phase 2 using the small-deflection controller (MSI-SD2) and stiff-stick (MSI-SS). Collective control inputs were applied through the longitudinal control axis of the side-stick controller. Small-deflection force pedals for Phase 2 evaluation were implemented using the NASA-Ames simulator variable force-feel system. The same force/deflection gradient and breakout force used during Phase 1 was implemented.

4-AXIS CONTROLLER CONFIGURATIONS
FORCE/DEFLECTION CHARACTERISTICS

4-AXIS CONTROLLER CONFIGURATIONS	SIMULATION PHASES		OPERATING FORCE LINEAR RANGE (±)				MAXIMUM DEFLECTION (±)				FORCE/DEFLECTION			
	PHASE 1	PHASE 2	X LONG	Y LAT	Z VERT	ψ YAW	X LONG	Y LAT	Z VERT	ψ YAW	X LONG	Y LAT	Z VERT	ψ YAW
			LBS	LBS	LBS	IN-LBS	DEG	DEG	IN	DEG	LBS/DEG	LBS/DEG	LBS/IN	IN-LBS/DEG
(1) LARGE DEFLECTION - HLH PROTOTYPE	X		—	—	—	—	12.0	12.0	0.5	15.0	0.9	0.6	15.0	0.7
(2) MEDIUM DEFLECTION - HLH PROTOTYPE	X		—	—	—	—	12.0	12.0	0.5	15.0	1.67	1.05	35.0	2.7
(3) SMALL DEFLECTION - (PITCH AND ROLL) MSI-SD1	X		20	20	40	60	5.3	5.3	0.1	4.0	3.05	2.25	400	15.0
(4) STIFF-STICK MSI-SS	X	X	20	20	40	60	0.5	0.5	—	—	40	40	—	—
(5) SMALL DEFLECTION - (PITCH AND ROLL) MSI-SD2	X	X	20	20	40	60	8.3	8.3	0.15	6.0	1.82	1.45	267	10.0
(6) SMALL DEFLECTION - (ALL AXES) MSI-SD3		X	12	12	+24 -21	36	6.6	6.6	.25	10.0	1.82	1.82	+95 -85	3.6
(7) SMALL DEFLECTION - (ALL AXES) LSI - BRASSBOARD		X	15.9	12.8	15.8	35	7.6	7.6	.156	7	2.09	1.67	+95 -85	5.0

Table 3-1

3.2 STABILITY AND CONTROL AUGMENTATION SYSTEM (SCAS) CHARACTERISTICS

The segments of the attack helicopter mission considered to be critical from a handling qualities point-of-view are those spent in nap-of-the-earth (NOE) flight; those inherently high workload tasks include low-speed point-to-point maneuvering using dash, quick stop, and sideward flight techniques, masked hover in ground effect and unmasked hover out of ground effect including target search, acquisition, and weapon delivery. These simulations were designed to provide a definition of flight control laws and SCAS mode switching logic requirements for the various mission segments. In addition, the effects on both handling qualities and flight safety of degraded SCAS modes were to be determined. The effect of the side-stick controller configuration under degraded SCAS mode conditions is important, since high levels of vehicle stability may mask undesirable characteristics of some controller options. SCAS redundancy requirements also need to be weighed in final selection of a controller configuration. For example, a (3+1) axis controller configuration requiring only rate stabilization may be more cost effective than a 4-axis side-stick controller requiring attitude stabilization to achieve Level 2 handling qualities.

Figure 3-4 presents a block diagram of the flight control system design developed for the ADOCS Demonstrator Program. The primary flight control system (PFCS) was designed to yield satisfactory unaugmented flight by providing feed-forward command augmentation and shaping. The advanced flight control system (AFCS) included both stabilization feedback loops and a feed-forward control-response model. Stabilization feedback loops were designed solely for maximum gust and upset rejection; no compromise for control response was necessary. Use of a control-response model allowed the shaping of the short- and long-term response to the pilot's control inputs independent of the stabilization level.

Various control system concepts were formulated to accomplish the attack helicopter low speed/hover maneuvers. The generic SCAS configurations chosen for evaluation are identified in Figure 3-5 in the form of a command response/stabilization matrix. A simple identification code (Figure 3-5) was established. For example, a system with angular rate command and attitude stabilization in pitch and roll was identified with the letter code RA/AT. A complete explanation of the nomenclature used to identify the AFCS configurations follows:

- Pitch and Roll

  LV/PH - Velocity command, Position hold.
  LV/LV - Velocity command, Velocity stabilization.

ADOCS FLIGHT CONTROL SYSTEM CONCEPT

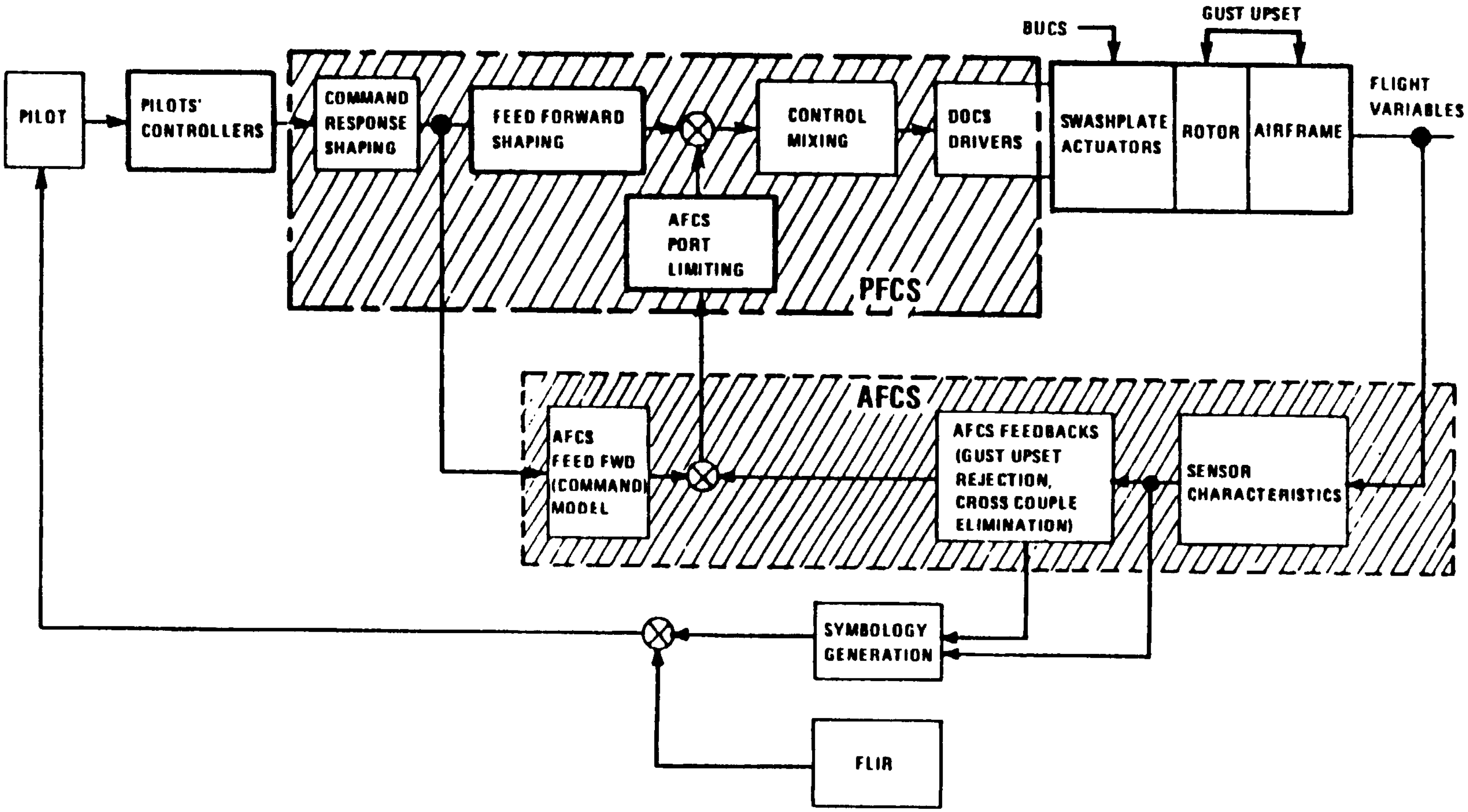
PILOT
PILOTS' CONTROLLERS
COMMAND RESPONSE SHAPING
FEED FORWARD SHAPING
CONTROL MIXING
DOCS DRIVERS
AFCS PORT LIMITING
PFCS
BUCS
GUST UPSET
SWASHPLATE ACTUATORS
ROTOR
AIRFRAME
FLIGHT VARIABLES
AFCS
AFCS FEED FWD (COMMAND) MODEL
AFCS FEEDBACKS (GUST UPSET REJECTION, CROSS COUPLE ELIMINATION)
SENSOR CHARACTERISTICS
SYMBOLOGY GENERATION
FLIR

Figure 3-4

GENERIC SCAS CONFIGURATIONS

COMMAND RESPONSE/STABILIZATION MATRIX

RESPONSE COMMAND MODEL	STABILIZATION LEVEL							
	LONGITUDINAL/LATERAL				DIRECTIONAL		VERTICAL	
	RA	AT	LV	LP	RA	AT	LV	LP
AC	●				●	●	NA	
RA	●	●	●		●	●		
AT		●	●					
LA					NA		●	●
LV			●	●				●

IDENTIFICATION CODE

	PITCH/ ROLL	YAW	VERTICAL
ANGULAR ACCELERATION	AC	$\ddot{\psi}$	–
ANGULAR RATE	RA	$\dot{\psi}$	–
ANGULAR ATTITUDE	AT	ψ_H	–
LINEAR ACCELERATION	LA	–	$\ddot{h}$
LINEAR VELOCITY	LV	–	$\dot{h}$
LINEAR POSITION	LP	–	h_H

EXAMPLE: RA/AT

ANGULAR RATE COMMAND/ATTITUDE STABILIZATION

$\dot{\psi}/\psi_H$

YAW RATE COMMAND/HEADING HOLD

Figure 3-5

AT/LV - Attitude command, Velocity stabilization.
AT/AS - Attitude command, Airspeed stabilization.
AT/AT - Attitude command, Attitude stabilization.
RA/LV - Rate command, Velocity stabilization.
RA/AT - Rate command, Attitude stabilization.
RA/RA - Rate command, Rate stabilization.
AC/RA - Acceleration command, Rate stabilization.

- Yaw

  $\dot{\psi}/\psi_H$ - Yaw rate command, Heading hold.

  $\ddot{\psi}/\dot{\psi}$ - Yaw acceleration command, Yaw rate stabilization.

- Vertical

  $\dot{h}/h_H$ - Vertical velocity command, Altitude hold.

  $\ddot{h}/\dot{h}$ - Vertical acceleration command, Vertical velocity stabilization.

The method of SCAS implementation used for the simulation is illustrated in Figure 3-6 for the lateral axis. All control axes were implemented in a similar manner. A complete set of control law diagrams defining the AFCS math model programmed for the simulation is presented in Appendix A. The stabilization gains shown on the diagram were selected prior to the piloted evaluation phase as described in Volume 2 - Literature Review and Preliminary Analysis. A six degree-of-freedom small-perturbation model of the helicopter was used to develop the command response model for each axis. The analytical study established control response model gains for cancellation of undesirable roots of the vehicle characteristic equation. Control response model feed-forward parameters were defined for each of the response types identified in Figure 3-5.

3.2.1 Primary Flight Control System (PFCS)

As indicated in Figure 3-7, a pilot force-command signal is provided to each PFCS axis. The signal is shaped, adjusted in gain, passed through a derivative rate-limiter, and fed to the AFCS command model and to the primary UH-60A flight-control system through a feed-forward shaping network. Limiting of the AFCS output is also a function of the PFCS, but it was not incorporated for this experiment. The specification of force-command signal quantization, nonlinear command shaping, derivative rate-limiter parameters, and forward path lead-lag shaping characteristics are described in detail in Section 4.1 of Volume 2.

3.2.2 Automatic Flight Control System (AFCS)

The AFCS model implemented for the ACC/AFCS simulation was developed in two stages. The original Phase 1 implementation

GENERIC LATERAL SCAS

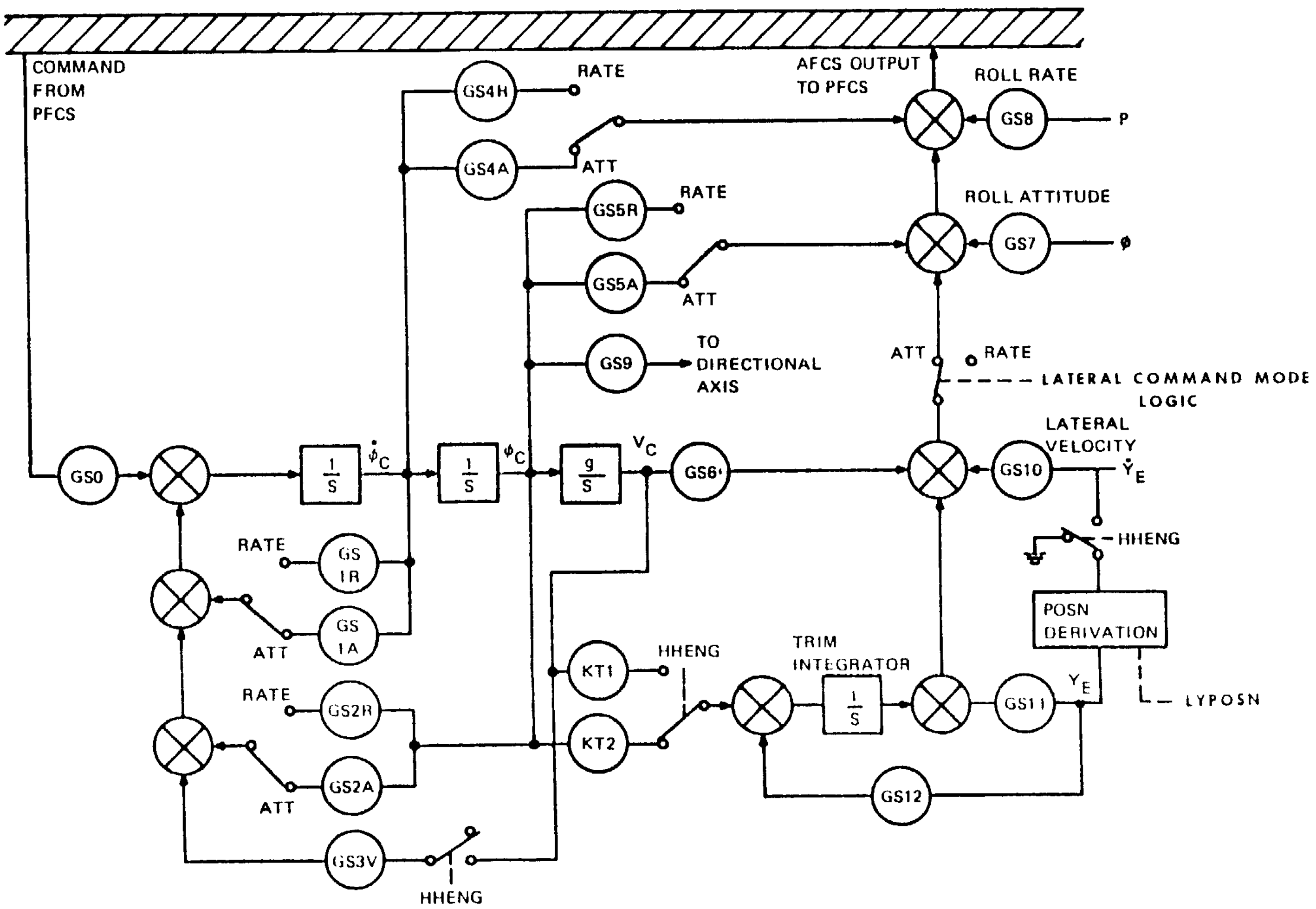
COMMAND
FROM
PFCS
AFCS OUTPUT
TO PFCS
ROLL RATE
GS8
P
ROLL ATTITUDE
GS7
φ
GS4H
RATE
GS4A
ATT
GS5R
RATE
GS5A
ATT
GS9
TO
DIRECTIONAL
AXIS
ATT
RATE
LATERAL COMMAND MODE
LOGIC
LATERAL
VELOCITY
GS10
$\dot{Y}_E$
HHENG
POSN
DERIVATION
LYPOSN
Y_E
GS11
GS12
TRIM
INTEGRATOR
$\frac{1}{S}$
GS0
$\frac{1}{S}$
$\dot{\phi}_C$
$\frac{1}{S}$
ϕ_C
$\frac{g}{S}$
V_C
GS6
RATE
GS 1R
GS 1A
ATT
RATE
GS2R
GS2A
ATT
GS3V
HHENG
KT1
KT2
HHENG

Figure 3-6

ADOCS PFCS DESIGN

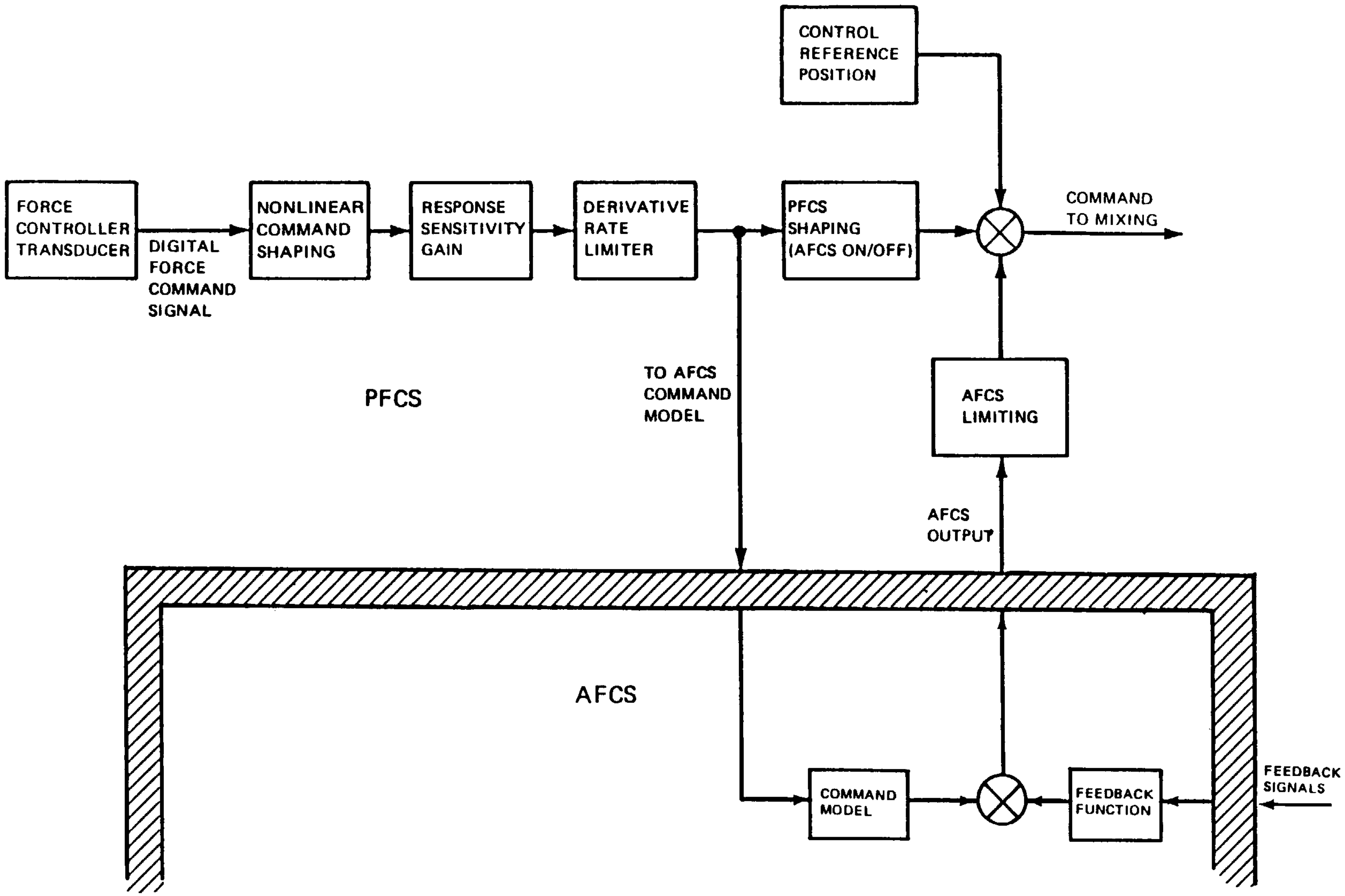
CONTROL REFERENCE POSITION
FORCE CONTROLLER TRANSDUCER
DIGITAL FORCE COMMAND SIGNAL
NONLINEAR COMMAND SHAPING
RESPONSE SENSITIVITY GAIN
DERIVATIVE RATE LIMITER
PFCS SHAPING (AFCS ON/OFF)
COMMAND TO MIXING
PFCS
TO AFCS COMMAND MODEL
AFCS LIMITING
AFCS OUTPUT
AFCS
COMMAND MODEL
FEEDBACK FUNCTION
FEEDBACK SIGNALS

Figure 3-7

was designed primarily for hover and low speed flight. Modifications were made for Phase 2 to include additional feedback and feed-forward paths required for forward flight control laws. Specifically, airspeed and lateral acceleration stabilization signals and cross-axis control paths were added for decoupling and automatic turn coordination.

In the longitudinal AFCS (Figure 3-8), linear velocity stabilization was provided by a longitudinal ground speed signal for airspeeds below 40 knots and by a longitudinal airspeed signal for airspeeds above 45 knots. Switching between the two signals was transient-free.

The lateral AFCS was implemented for this experiment as indicated in Figure 3-9. In order to switch between a roll attitude command/lateral velocity stabilization system (AT/LV) at low speed and a roll rate command/attitude hold system (RA/AT) for higher speed maneuvering flight, a selectable hybrid lateral AFCS was provided. The indicated gain changes were ramped over a five-second time period and were initiated by the following control mode logic. The switch to the rate command system was accomplished when airspeed exceeded 45 knots if roll rate was less than 1.0 deg/sec. If the pilot was holding a bank angle force command at this time, the aircraft would respond to satisfy the commanded roll rate. In order to minimize switching transients when decelerating in a turn, logic delayed switching to an attitude command system below 40 knots until bank angle was less than 3.0 degrees and roll rate was less than 1.0 deg/sec.

A cross-axis command path to the directional AFCS was also provided (Figure 3-10); the commanded bank angle was used to calculate a yaw rate command as a function of airspeed to provide for automatic turn coordination. As indicated in Figure 3-10, the selectable Turn Coordination Mode in the directional AFCS was achieved by a combination of integral-plus-proportional lateral acceleration feedback, roll rate feedback, and the yaw rate command feed-forward path. If selected, turn coordination was activated automatically when airspeed exceeded 50 knots and a roll rate was commanded by a lateral force input. While Turn Coordination was operating, the Heading Hold function was disengaged. Turn Coordination remained On, and Heading Hold Off, until the aircraft was commanded to a bank angle of less than 3.0 degrees and both roll rate and yaw rate were less than 1.0 deg/sec. Heading Hold stabilization was provided full-time, if selected, and Turn Coordination disengaged for airspeeds below 50 knots. However, during a decelerating turn maneuver from forward flight, the Heading Hold Mode would not engage until the above requirements on roll rate, yaw rate, and roll attitude were satisfied.

ORIGINAL PAGE IS
OF POOR QUALITY

ADOCS LONGITUDINAL A
ACC/AFCS PHASE 2E

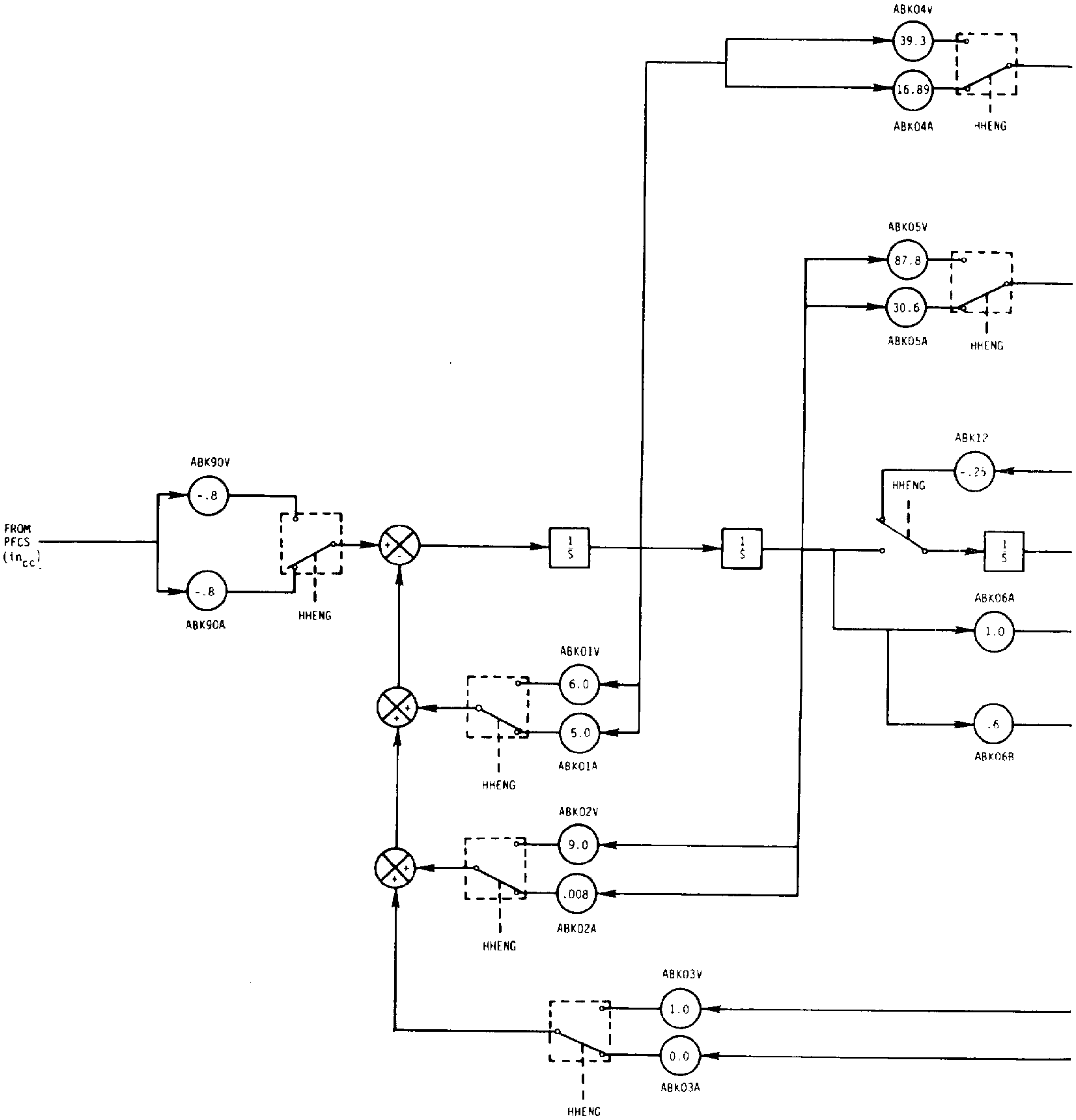
ABK04V
39.3
16.89
ABK04A
HHENG
ABK05V
87.8
30.6
ABK05A
HHENG
ABK12
-.25
HHENG
ABK90V
-.8
FROM
PFCS
(in_cc)
-.8
ABK90A
HHENG
+
-
1/S
1/S
1/S
ABK06A
1.0
.6
ABK06B
ABK01V
6.0
5.0
ABK01A
+
+
HHENG
ABK02V
9.0
.008
ABK02A
+
+
HHENG
ABK03V
1.0
0.0
ABK03A
HHENG

FOLDOUT FRAME

FCS

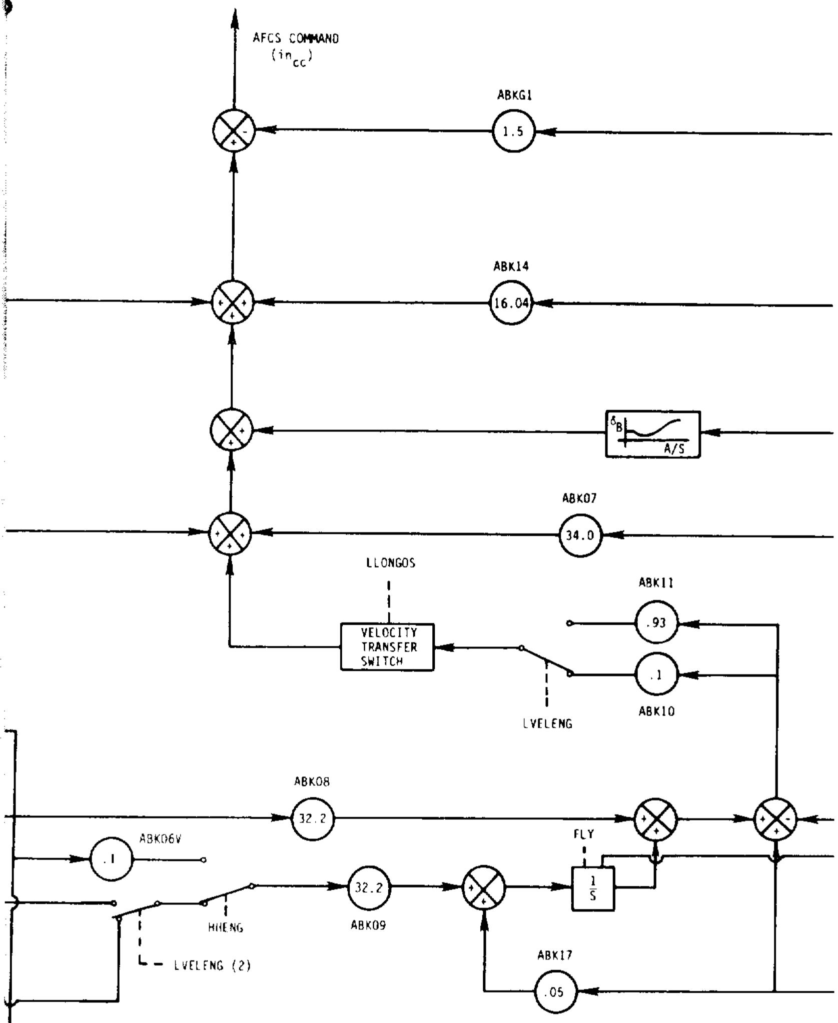
AFCS COMMAND
(in_{cc})
ABKG1
1.5
ABK14
16.04
δ_B
A/S
ABK07
34.0
LLONGOS
VELOCITY TRANSFER SWITCH
ABK11
.93
.1
ABK10
LVELENG
ABK08
32.2
FLY
ABK06V
.1
32.2
ABK09
$\frac{1}{S}$
HHENG
LVELENG (2)
ABK17
.05

δ_B VS A/S

A/S (kts)	δ_B (in)	SLOPE
-40	.3124	0
40	.3124	-.0134
51	.165	0
60	.165	.003
65	.18	.027
80	.588	.0207
94	.88	.0117
100	.95	.00625
108	1.0	.0058
120	1.07	.00165
140	1.103	0

θ VS A/S

A/S (kts)	θ (rad)
-40	.094
40	.094
58	.046
80	.044
100	.028
140	-.048

FOLDOUT FRAME 2

ORIGINAL PAGE IS
OF POOR QUALITY

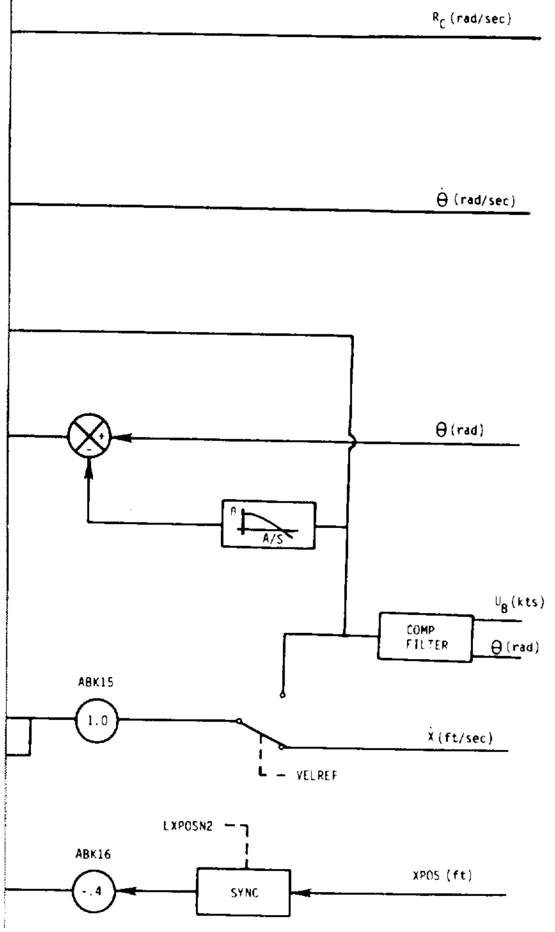
R_C (rad/sec)
$\dot{\theta}$ (rad/sec)
θ (rad)
+
-
A/S
U_B (kts)
COMP FILTER
θ (rad)
ABK15
1.0
$\dot{X}$ (ft/sec)
VELREF
LXPOSN2
ABK16
-.4
SYNC
XPOS (ft)

SLOPE
0
-.00267
-.000091
-.0008
-.0019
0

Figure 3-8

FOLDOUT FRAME

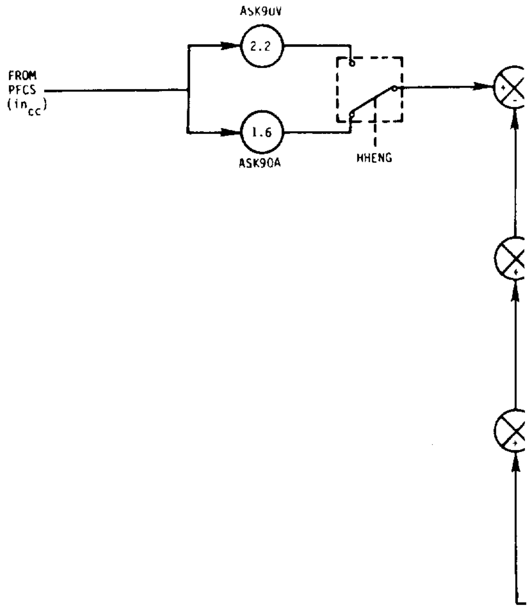
ASK90V
2.2
FROM PFCS (in_{cc})
1.6
ASK90A
HHENG
+
-
+
+

ORIGINAL PAGE IS
OF POOR QUALITY

ADOCS LATERAL AFCS
ACC/AFCS PHASE 2B

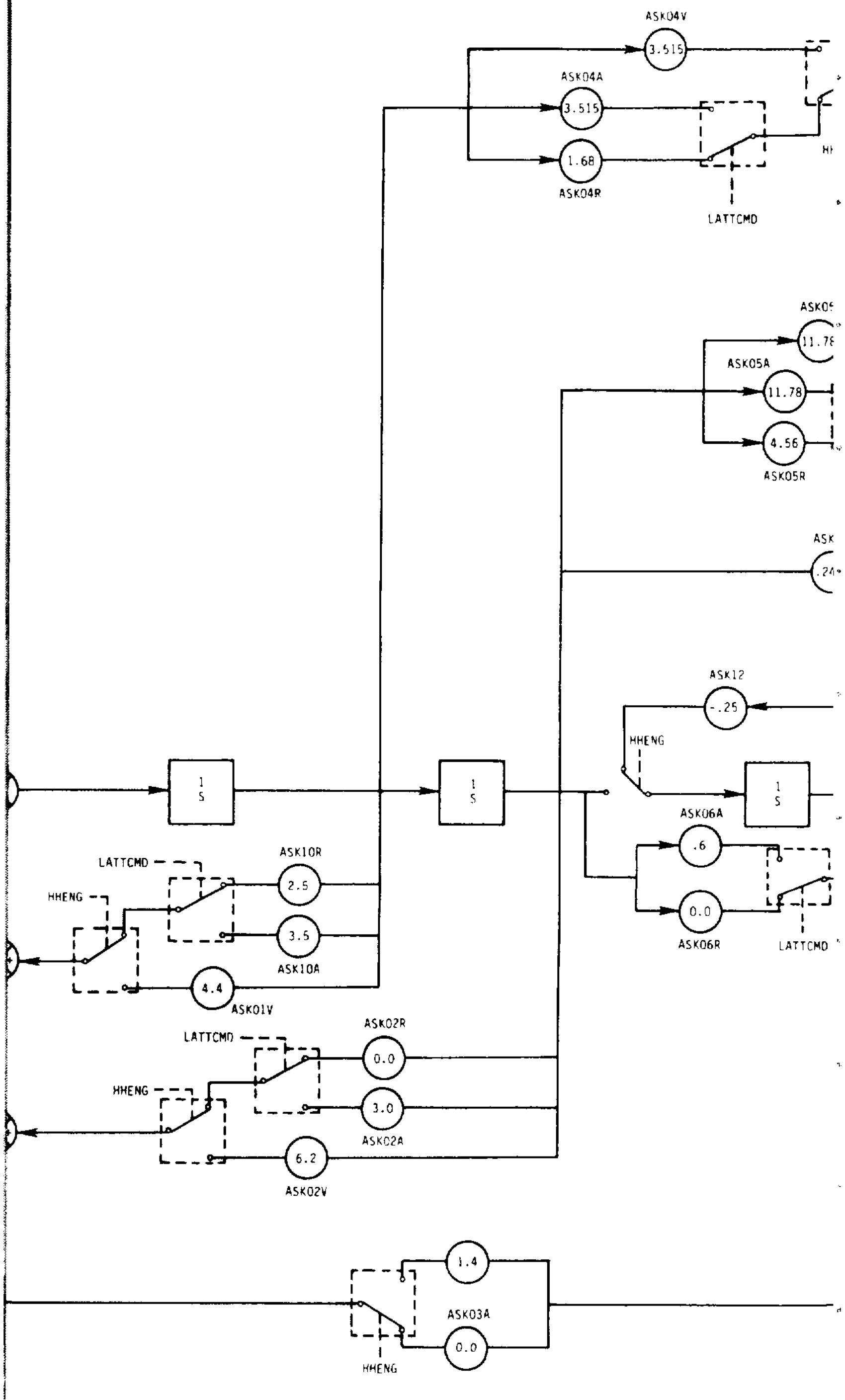

ASK04V
3.515
ASK04A
3.515
1.68
ASK04R
LATTCMD
ASK0
11.7
ASK05A
11.78
4.56
ASK05R
ASK
.24
ASK12
-.25
HHENG
1
S
1
S
1
S
ASK06A
.6
0.0
ASK06R
LATTCMD
LATTCMD
HHENG
ASK10R
2.5
3.5
ASK10A
4.4
ASK01V
LATTCMD
HHENG
ASK02R
0.0
3.0
ASK02A
6.2
ASK02V
1.4
ASK03A
0.0
HHENG

FOLDOUT FRAME 2

3 FOLDOUT FRAME

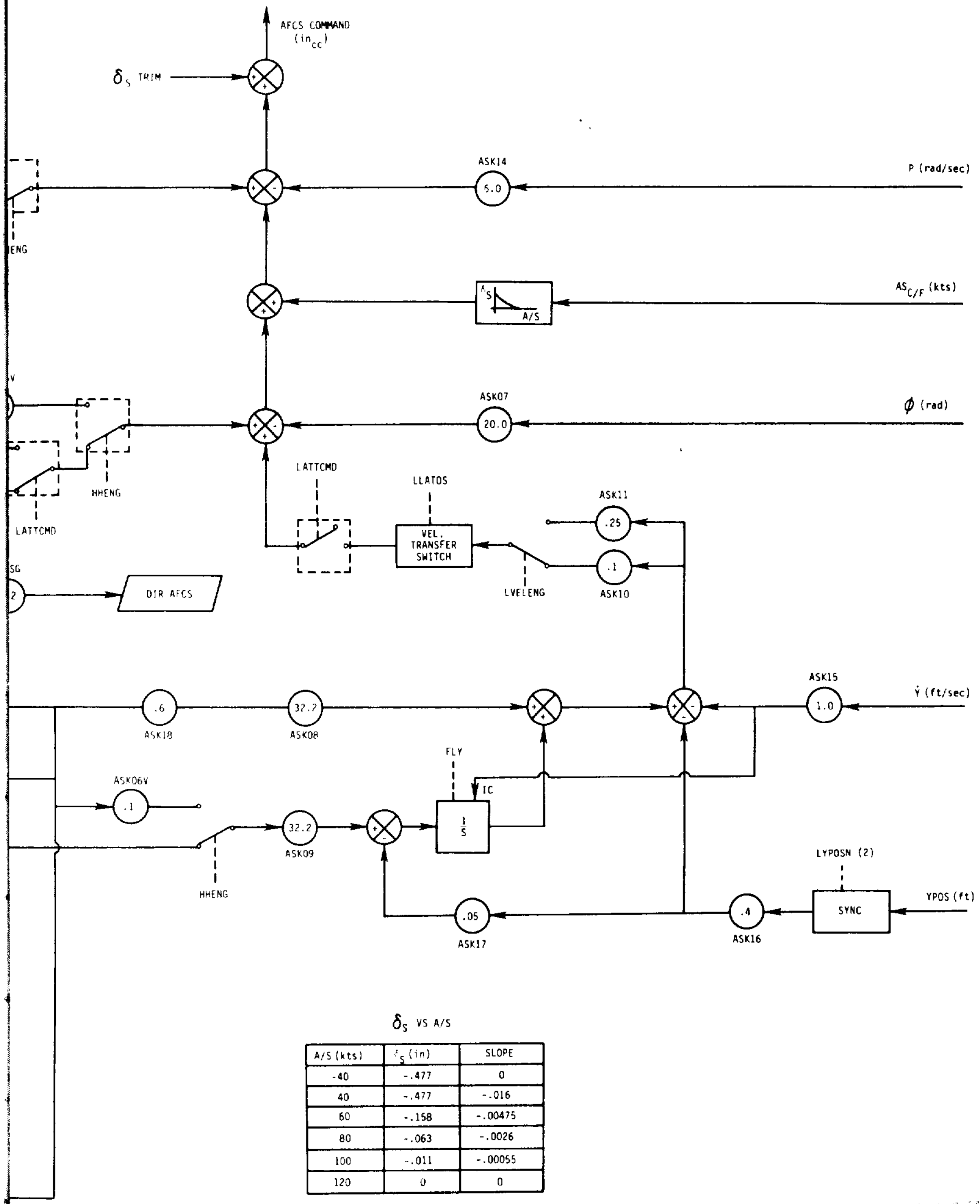
AFCS COMMAND
(in_{cc})
δ_S TRIM
ASK14
6.0
P (rad/sec)
ENG
δ_S
A/S
$AS_{C/F}$ (kts)
V
ASK07
20.0
ϕ (rad)
HHENG
LATTCMD
LATTCMD
LLATOS
VEL. TRANSFER SWITCH
ASK11
.25
.1
ASK10
LVELENG
SG
2
DIR AFCS
.6
ASK18
32.7
ASK08
ASK15
1.0
$\dot{Y}$ (ft/sec)
FLY
IC
$\frac{1}{S}$
ASK06V
.1
32.2
ASK09
HHENG
LYPOSN (2)
SYNC
YPOS (ft)
.4
ASK16
.05
ASK17

δ_S VS A/S

A/S (kts)	δ_S (in)	SLOPE
-40	-.477	0
40	-.477	-.016
60	-.158	-.00475
80	-.063	-.0026
100	-.011	-.00055
120	0	0

ORIGINAL PAGE IS
OF POOR QUALITY

Figure 3-9

FOLDOUT FRAME

ADO
A

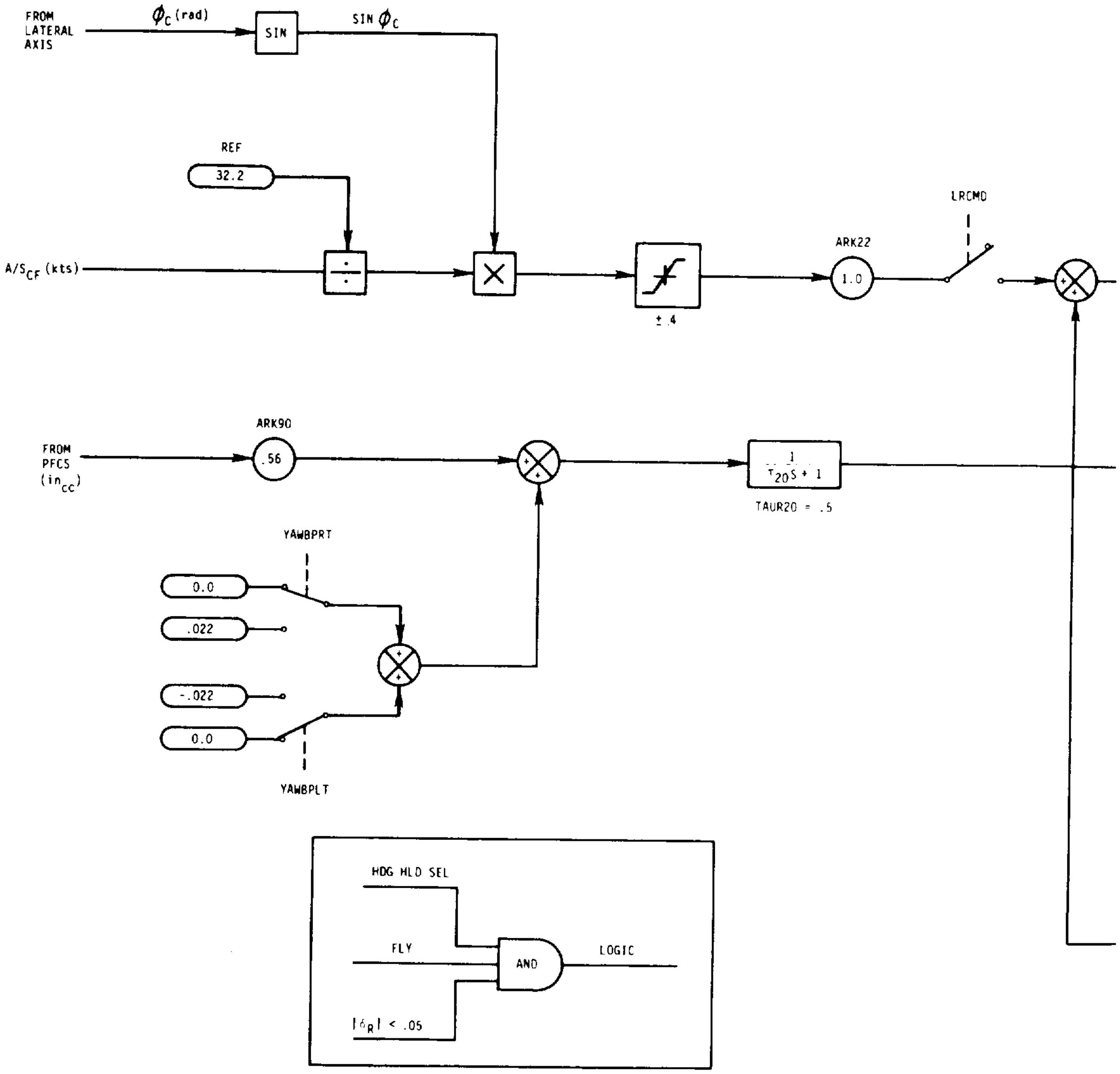

FROM LATERAL AXIS
ϕ_C (rad)
SIN
SIN ϕ_C
REF
32.2
A/S_{CF} (kts)
±.4
ARK22
1.0
LRCMD
FROM PFCS (in_{cc})
ARK90
.56
$\frac{1}{\tau_{20}S+1}$
TAUR20 = .5
YAWBPRT
0.0
.022
-.022
0.0
YAWBPLT
HDG HLD SEL
FLY
AND
LOGIC
$|\delta_R| < .05$

ORIGINAL PAGE IS
OF POOR QUALITY

CS DIRECTIONAL AFCS
CC/AFCS PHASE 2B

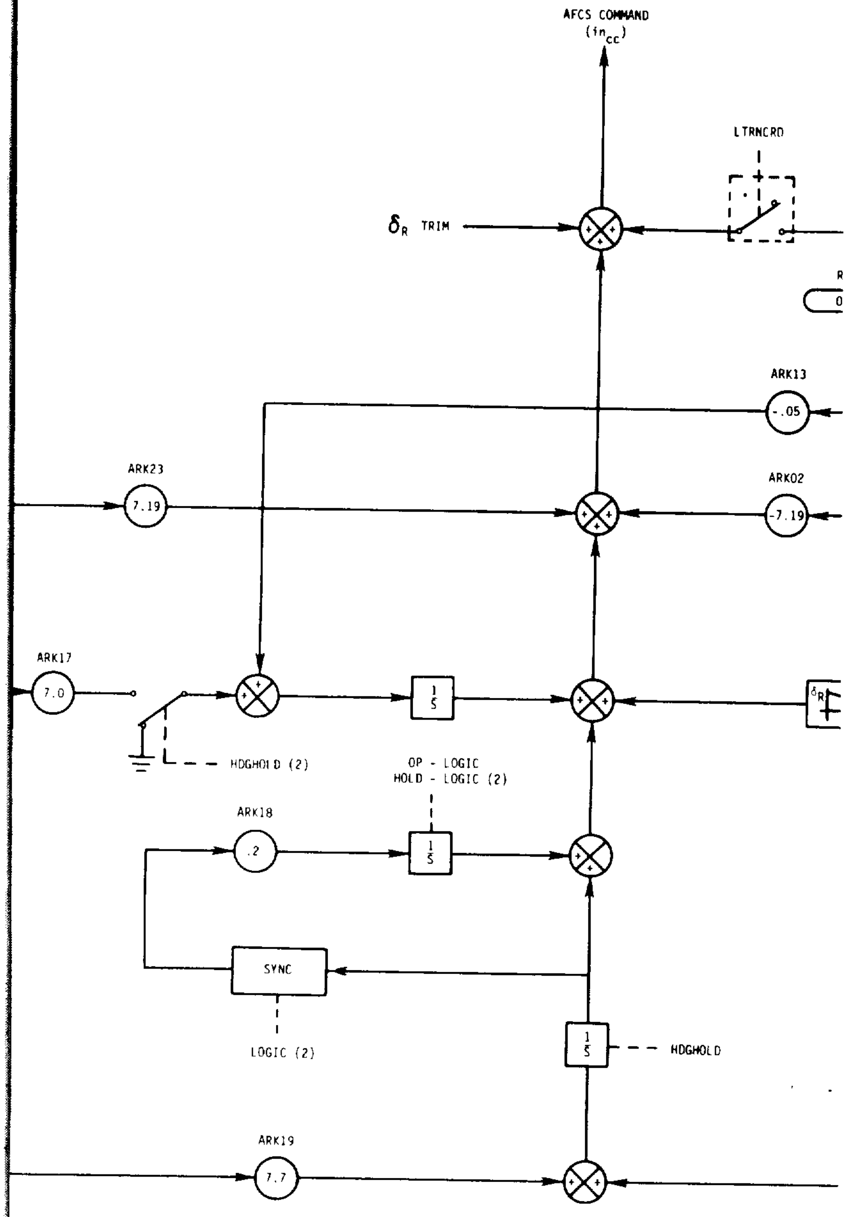

AFCS COMMAND
(in_{cc})
LTRNCRD
δ_R TRIM
ARK13
-.05
ARK23
7.19
ARK02
-7.19
ARK17
7.0
HDGHOLD (2)
$\frac{1}{S}$
δ_R
OP - LOGIC
HOLD - LOGIC (2)
ARK18
.2
SYNC
LOGIC (2)
HDGHOLD
ARK19
7.7

δ_R VS A/S

A/S (kts)	δ_R(in)	SLOPE
-40	-.055	0
40	-.055	-.0025
56	-.095	0
62	-.095	.004
67	-.075	.0078
80	.026	.00345
100	.095	.00185
120	.132	0

FOLDOUT FRAME 2

3 FOLDOUT FRAME

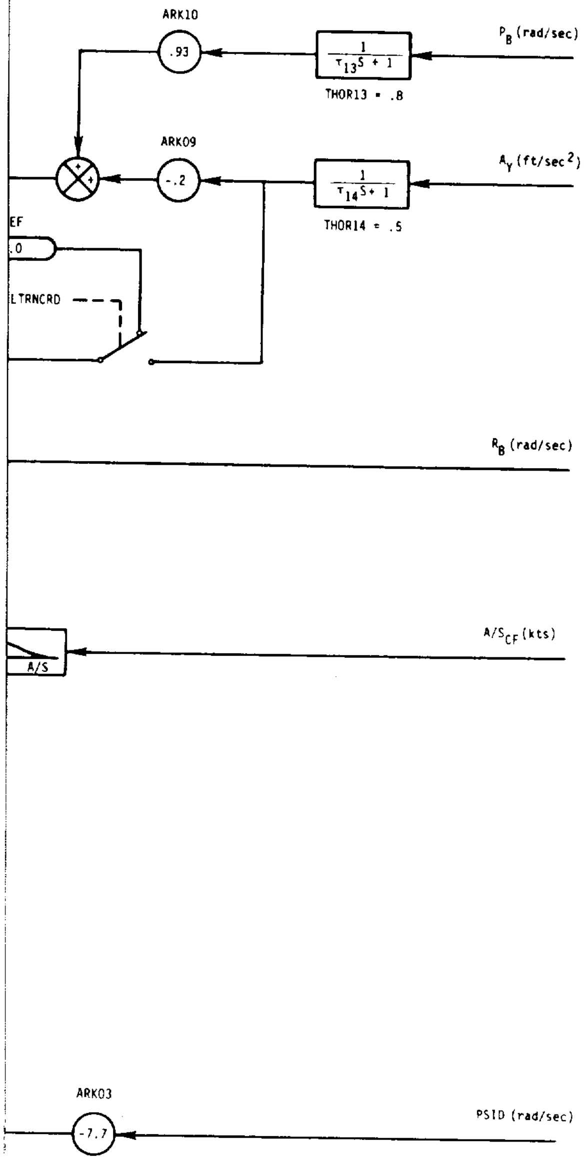
ARK10
.93
$\frac{1}{\tau_{13}S + 1}$
P_B (rad/sec)
THOR13 = .8
ARK09
-.2
$\frac{1}{\tau_{14}S + 1}$
A_Y (ft/sec^2)
THOR14 = .5
+
+
EF
.0
LTRNCRD
R_B (rad/sec)
A/S
A/S_{CF} (kts)
ARK03
-7.7
PSID (rad/sec)

ORIGINAL PAGE IS OF POOR QUALITY

Figure 3-10

The vertical AFCS (Figure 3-11) was modified to include gain scheduling as a function of airspeed for the altitude and altitude rate feedback paths to achieve tight altitude hold for Precision Hover Tasks and lower stabilization gains during high speed flight. Command model gains were also altered appropriately to provide the desired vertical response to control inputs at all airspeeds.

The attack helicopter mission dictates precise hover control to maintain horizontal position while executing Precision Hover and Bob-up Tasks. Accordingly, feed-forward and feedback paths were incorporated in the longitudinal and lateral AFCS control laws to provide a pilot-selectable Hover-Hold Mode. Figures 3-8 and 3-9 show the longitudinal and lateral AFCS as implemented for this experiment. Blending between the Hover-Hold Mode and other control modes is accomplished by transient-free changes in the structure and gains used in the feed-forward portion of the longitudinal and lateral AFCS control laws. The Hover-Hold Mode provides a velocity-command system with high gain velocity stabilization with or without position feedback. Longitudinal and lateral position reference signals used in the position feedback are derived from groundspeed signals. The Hover-Hold Mode can only be selected if both longitudinal and lateral groundspeeds are less than 5 ft/sec and if the pilot has selected either the hover or bob-up mode of the IHADSS display symbols. Once selected, the Hover-Hold Mode remains active if longitudinal groundspeed does not exceed 25 ft/sec. With the Position-Hold enabled, Hover-Hold logic synchronizes position error to establish a new longitudinal or lateral ground reference position when a nonzero velocity is commanded by the pilot in that axis. Automatic position-relock occurs in each axis when ground speed in that axis is less than 2 ft/sec.

For forward flight, the same hybrid system for the longitudinal and lateral AFCS was available as that reported in Reference 3. This hybrid system was implemented to provide automatic blending of control laws as follows:

1) Longitudinal: pitch attitude command/groundspeed stabilization for low speed and pitch attitude command/airspeed stabilization at high speed.

2) Lateral: Roll attitude command/groundspeed stabilization for low speed and roll rate command/roll attitude stabilization at high speed.

3.3 VISUAL DISPLAY AND VISUAL AIDS

Since the ADOCS mission is to be flown at night or in adverse weather conditions or both, as well as in VMC, it is necessary to consider not only the effects of the controller and SCAS characteristics, but also the effect on handling qualities of the pilot's night-vision aids. For this experiment, flight

ORIGINAL PAGE IS
OF POOR QUALITY

1

X	Y	SLOPE
-40	5.7	0
40	5.7	-.0283
100	4.0	0

2

X	Y	SLOPE
-40	.35	0
40	.35	-.0047
100	.07	0

3

X	Y	SLOP
-40	.35	0
40	.35	-.003
100	.15	0

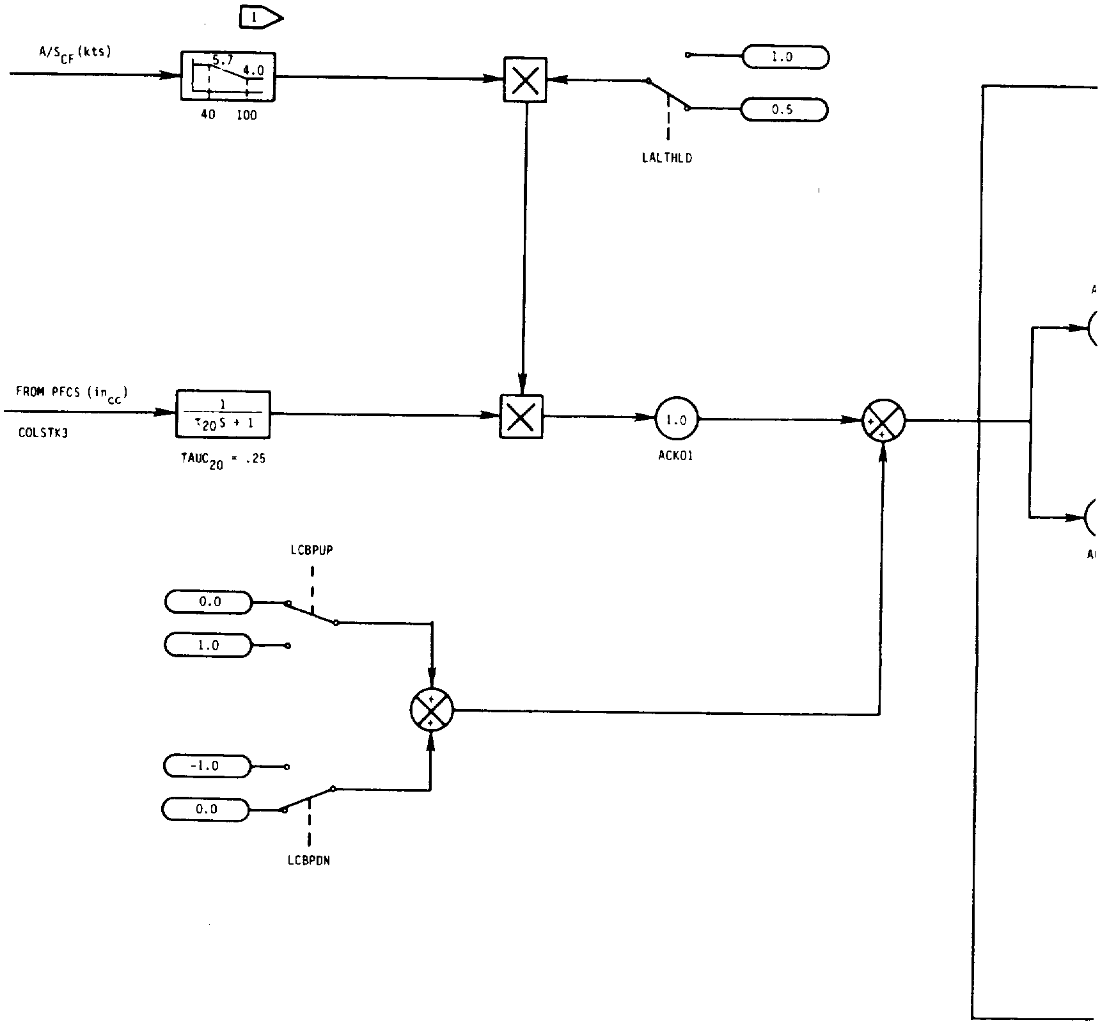
1
A/S$_{CF}$ (kts)
5.7
4.0
40
100
1.0
0.5
LALTHLD
FROM PFCS (in$_{cc}$)
COLSTK3
1
$\tau_{20}S + 1$
TAUC$_{20}$ = .25
1.0
ACK01
+
+
LCBPUP
0.0
1.0
-1.0
0.0
LCBPDN
+
+

ADOCS
ACC/

FOLDOUT FRAME

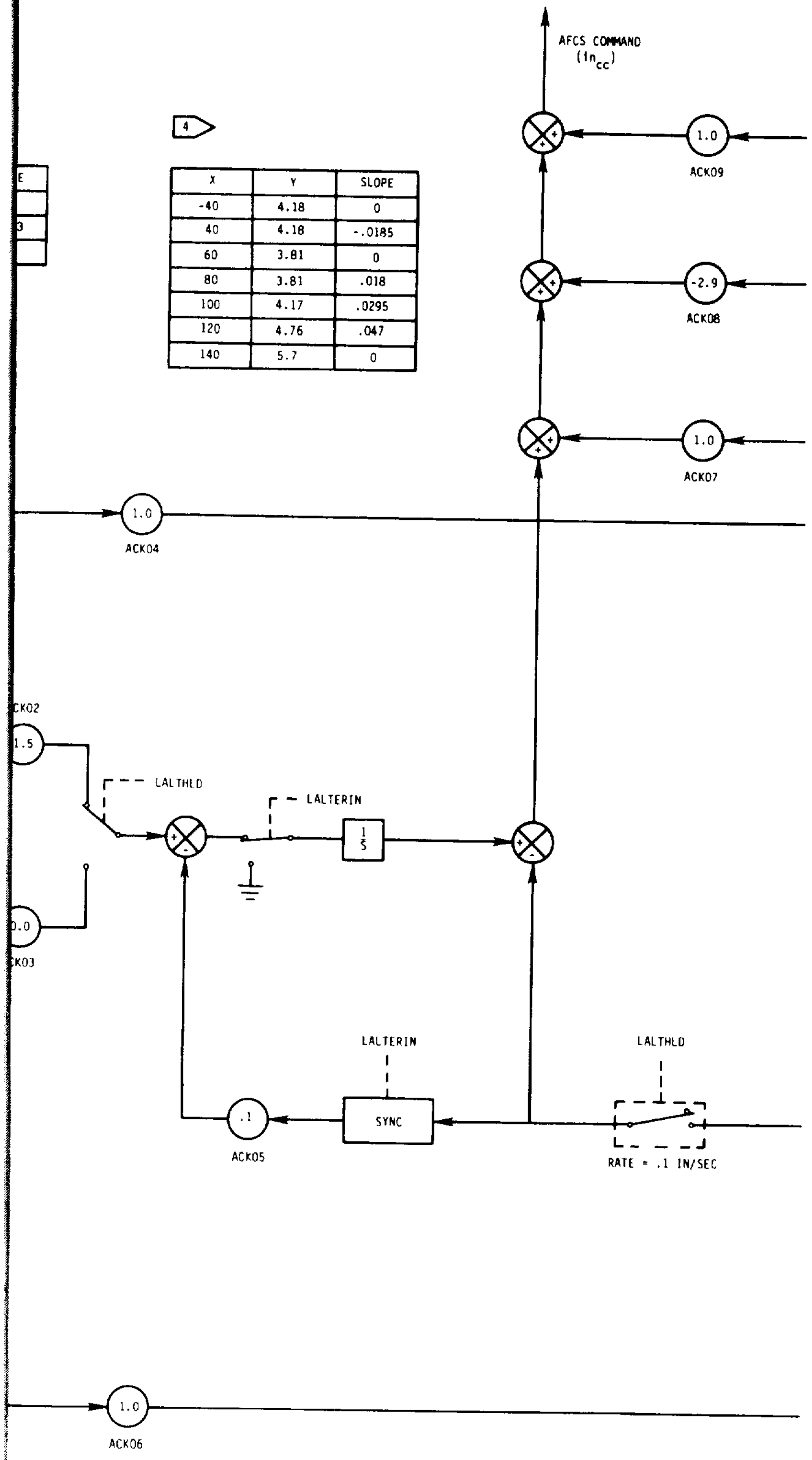
AFCS COMMAND
(in_{cc})
4
1.0
ACK09
-2.9
ACK08
1.0
ACK07
1.0
ACK04
E
3
CK02
1.5
LALTHLD
LALTERIN
$\frac{1}{S}$
0.0
CK03
LALTERIN
LALTHLD
.1
SYNC
ACK05
RATE = .1 IN/SEC
1.0
ACK06

X	Y	SLOPE
-40	4.18	0
40	4.18	-.0185
60	3.81	0
80	3.81	.018
100	4.17	.0295
120	4.76	.047
140	5.7	0

VERTICAL AFCS
FCS PHASE 2B

FOLDOUT FRAME 2

ORIGINAL PAGE IS
OF POOR QUALITY

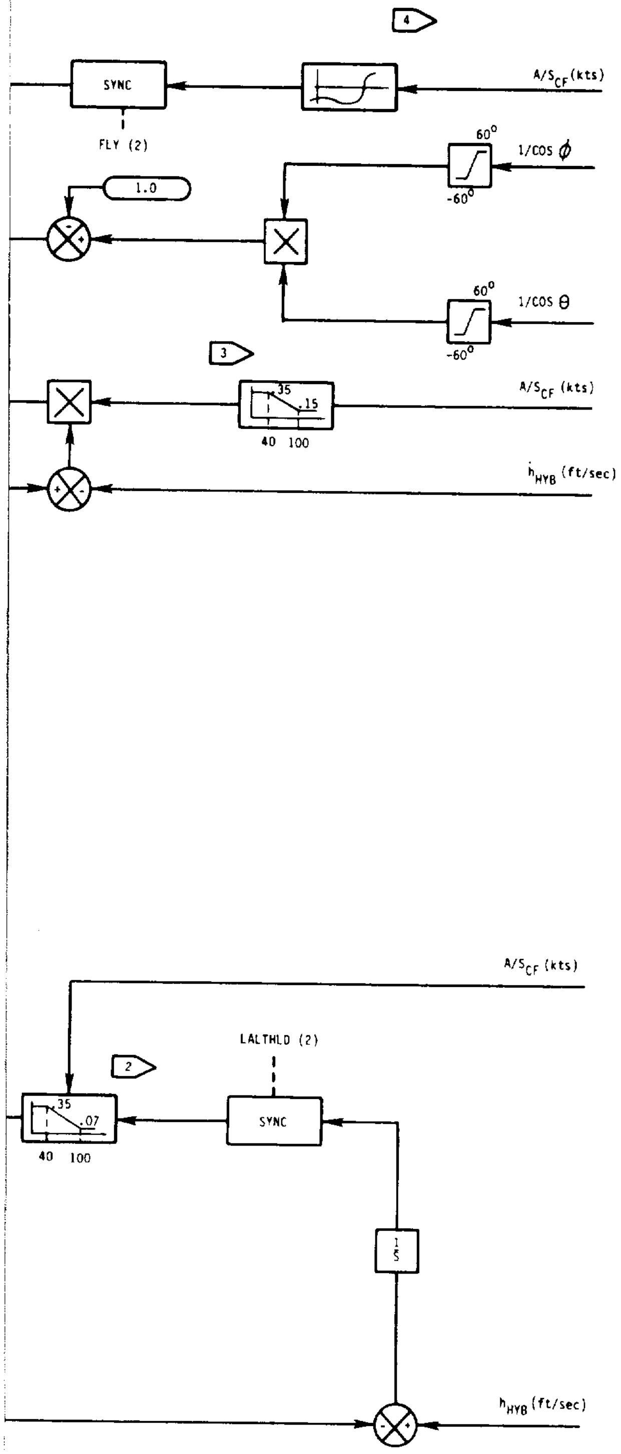
4
SYNC
FLY (2)
A/S_CF (kts)
60°
1/COS φ
-60°
1.0
60°
1/COS θ
-60°
3
.35
.15
40 100
A/S_CF (kts)
ḣ_HYB (ft/sec)
A/S_CF (kts)
LALTHLD (2)
2
.35
.07
40 100
SYNC
1/S
ḣ_HYB (ft/sec)

Figure 3-11

3

FOLDOUT FRAME

under IMC was simulated using the Honeywell Integrated Helmet and Display Sight System (IHADSS). Computer generated symbols, similar to those used in the AH-64 Apache Pilot Night-Vision System (PNVS), were superimposed on a 30° by 40° monochromatic image of the terrain board and presented to the pilot on the helmet-mounted display (HMD). This imagery, slaved to the pilot's head movements in azimuth and elevation and driven by aircraft motion parameters, provided the only visual cues available to the evaluation pilot. The pilot's line of sight is tracked with a helmet-mounted sight (HMS) that provides closed-loop command signals to point the terrain-board camera which simulates the turret-mounted night-vision sensor. Since the HMD is coupled to the pilot's head motions, he is able to scan a wide field-of-regard without being constrained to a head-down or look-forward position. Figure 3-12 shows the HMD and one of the sight-sensing units, used to track the head motions, behind the pilot.

The pilot-selectable display modes, which are used to meet the operational requirements for various attack helicopter mission tasks, are:

1) Cruise: high-speed level flight en route to the forward edge of the battle area

2) Transition: low-speed NOE maneuvers, such as dash, quick stop, and sideward flight

3) Hover: stable hover with minimum drift

4) Bob-up: unmask, target acquisition, and remask maneuvers over a selected ground position

A unique feature of this experiment was the capability to easily evaluate the effect of VMC and IMC on pilot ratings and task performance. IHADSS was installed at both simulation facilities for IMC simulation. VMC displays were simulated during Phase 1 using the Boeing four-window, wide angle field-of-view television display system, and at NASA-Ames using a four-window, computer generated image display system.

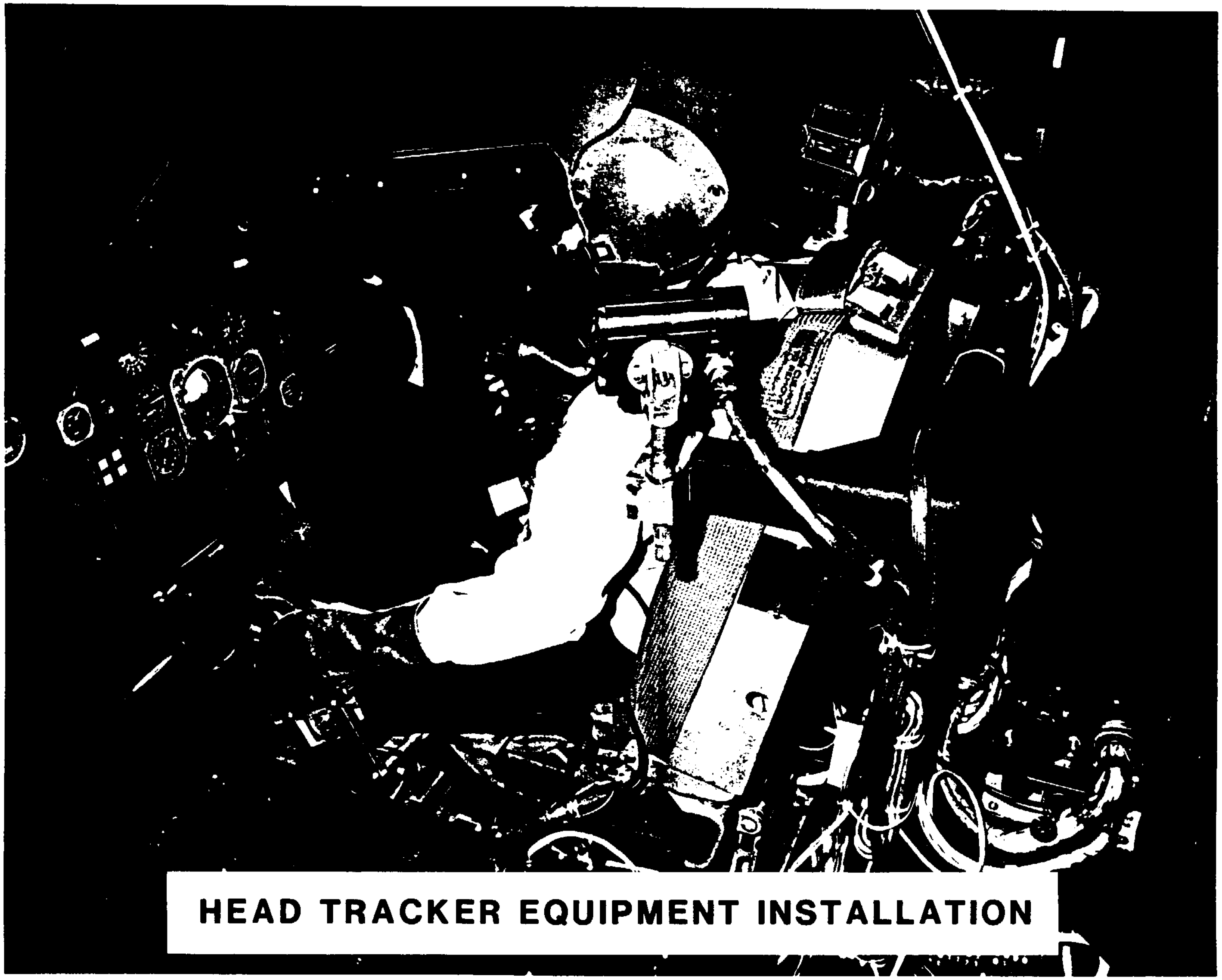
HEAD TRACKER EQUIPMENT INSTALLATION

Figure 3-12

4.0 CONDUCT OF EXPERIMENT

4.1 FACILITY DESCRIPTION

Five piloted simulation experiments were conducted as part of the ACC/AFCS study. Three simulations were completed during Phase 1 at the Boeing Vertol Flight Simulator Facility, and two were conducted during Phase 2 at the NASA Ames Vertical Motion Simulator (VMS). The following sections describe these two simulator facilities.

4.1.1 Boeing Vertol Flight Simulator Facility

Major elements of the Boeing Vertol Simulation Facility shown in Figure 4-1 include:

- Single-seat cockpit cab mounted on a six-degree-of-freedom limited-motion base.
- Conventional helicopter flight and performance instruments, and a SCAS mode select panel.
- Conventional helicopter collective and directional pedals implemented as small-displacement force controllers, and various 4-axis side-stick controllers. An adjustable mounting bracket attached to the armrest allowed orientation of each 4-axis side-stick controller for comfort and to minimize inter-axis control inputs. A forward tilt of six degrees and a counter-clockwise rotation of five degrees relative to the armrest was selected.
- Xerox Sigma 9 digital computer to drive the entire simulation. The Sigma 9 was programmed with a UH-60 full-flight envelope math model and easily variable SCAS configurations for this study.
- Four-camera wide-angle television/terrain model visual display system for the simulation of terrain flight under either: visual or instrument flight conditions.

A complete description of the Boeing Vertol Simulator motion system, including maximum accelerations and displacements, is included in Table 4-1.

VMC Display

The Boeing Vertol Simulator has a four-window cockpit visual display covering a field-of-view of 125° x 75°. The outside-world scene viewed by a fisheye objective lens (located at the bottom of the optical probe) is first demarcated into four separate channels of video information, each with a 38° x 29° field of view. Individual video signals are then passed to

PRECEDING PAGE BLANK NOT FILMED

PAGE 26 INTENTIONALLY BLANK

BOEING VERTOL
SMALL MOTION FLIGHT SIMULATION FACILITY WITH MULTI-WINDOW VISUAL DISPLAY

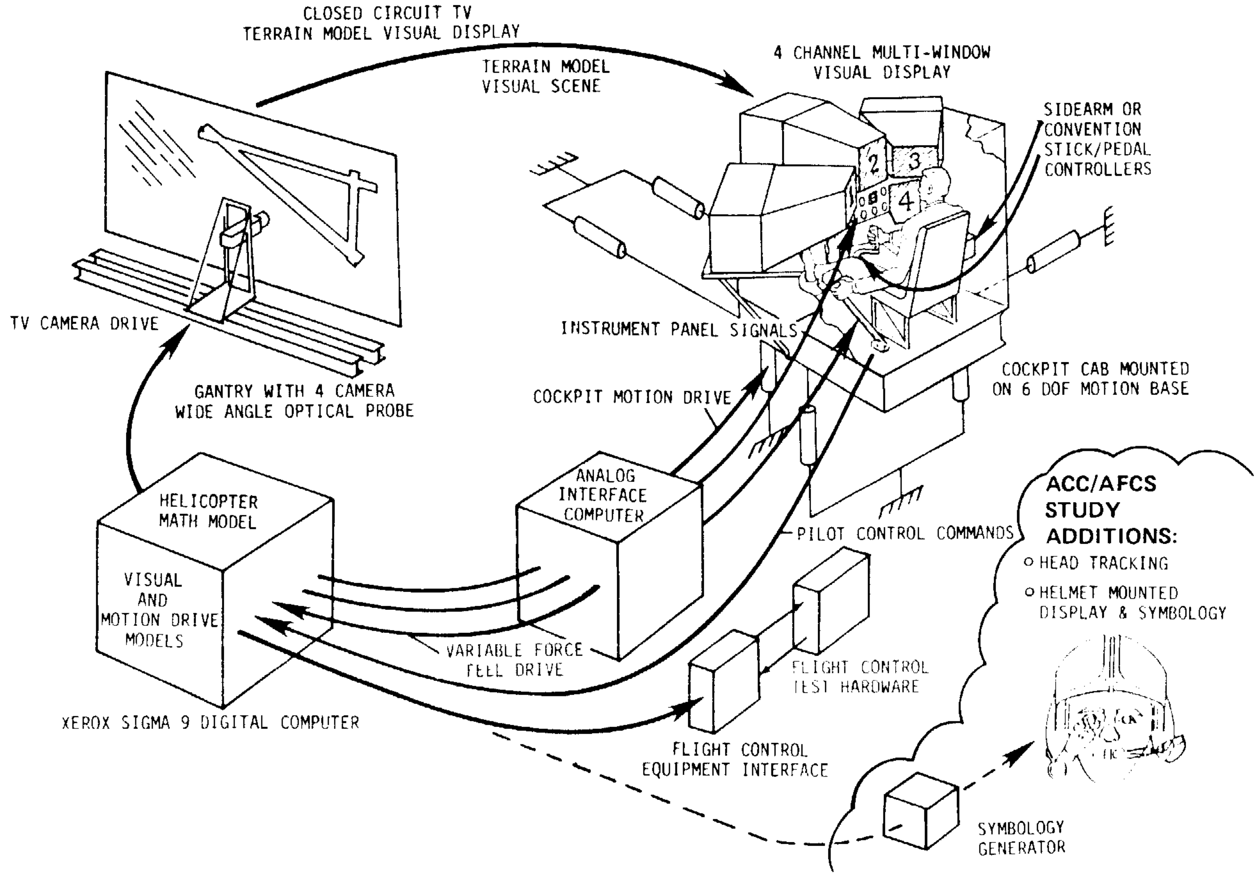
CLOSED CIRCUIT TV
TERRAIN MODEL VISUAL DISPLAY
TERRAIN MODEL
VISUAL SCENE
4 CHANNEL MULTI-WINDOW
VISUAL DISPLAY
SIDEARM OR
CONVENTION
STICK/PEDAL
CONTROLLERS
2
3
4
TV CAMERA DRIVE
INSTRUMENT PANEL SIGNALS
GANTRY WITH 4 CAMERA
WIDE ANGLE OPTICAL PROBE
COCKPIT MOTION DRIVE
COCKPIT CAB MOUNTED
ON 6 DOF MOTION BASE
ANALOG
INTERFACE
COMPUTER
HELICOPTER
MATH MODEL
PILOT CONTROL COMMANDS
ACC/AFCS
STUDY
ADDITIONS:
○ HEAD TRACKING
○ HELMET MOUNTED
DISPLAY & SYMBOLOGY
VISUAL
AND
MOTION DRIVE
MODELS
VARIABLE FORCE
FEEL DRIVE
FLIGHT CONTROL
TEST HARDWARE
XEROX SIGMA 9 DIGITAL COMPUTER
FLIGHT CONTROL
EQUIPMENT INTERFACE
SYMBOLOGY
GENERATOR

Figure 4-1

BOEING VERTOL SIMULATOR MOTION LIMITS

AXIS	TRAVEL LIMITS	RATE LIMITS WITH ZERO ACCELERATION	ACCELERATION LIMITS FOR ZERO RATES
HEAVE Z	±2.5 IN	±26 IN/SEC	±1.5g
LUNGE X	±2.5 IN	±41 IN/SEC	±0.62g
SWERVE Y	±2.5 IN	±26 IN/SEC	±0.52g
PITCH θ	±13 DEG	±1.2 RAD/SEC	±7.0 RAD/SEC^2
ROLL ϕ	±9.5 DEG	±1.7 RAD/SEC	±7.0 RAD/SEC^2
YAW ψ	±9.5 DEG	±2.7 RAD/SEC	±11.7 RAD/SEC^2

Table 4-1

their respective TV monitors in the cockpit, which the pilot looks at through Fresnel collimating lens "windows". Collimation of the monochromatic 525-line black-and-white TV images ensures realism in the out-of-the-window picture because the virtual image produced by each Fresnel window appears to be infinitely distant from the pilot's eye. Roll and yaw articulation of the out-of-the-window visual scene is unlimited, but pitch is restricted to 18° nose up and 37° nose down. Figure 4-2 is a photograph which shows a typical scene presented to the simulator pilot on final approach to an airport. The field of view provided to the pilot in the Boeing Vertol Simulator is also indicated on Figure 4-2.

IMC Display

A simulated FLIR image with superimposed symbology (Figure 4-3) was presented to the pilot for IMC flight by the Honeywell Integrated Helmet and Display Sight System (IHADSS) including head tracker. Components of the IHADSS system are illustrated in Figure 4-4.

The FLIR sensor signal was generated using the center-window video channel to provide a 30° x 40° outside world field-of-view display. The FLIR image, as provided by the camera probe, is slaved to the pilot's head movement by the helmet-mounted sight system. Thus the image seen by the pilot depends both on the aircraft Euler angles and the pilot's head location. A Gaertner Symbology Generator was utilized to overlay computer generated symbols on the video picture. This symbology was superimposed on the video channel electronically, thereby providing excellent resolution of the symbology.

Terrain Board

The terrain board developed for the first phase of the simulation is shown in Figure 4-5. The model board is a 200:1 scale model which includes a runway with evenly space obstacles for a slalom task, a tree-lined river-bed canyon for NOE maneuvers, and various locations for bob-up and lateral jink (sideward) maneuvering. The tasks used for the piloted evaluations are explained in detail in the Section 4.3.

4.1.2 NASA-Ames Vertical Motion Simulator (VMS)

Ames Research Center's Vertical Motion Simulator (VMS) Facility (Reference 4) has a six-degree-of-freedom moving-base with 60 feet of available vertical travel (Figure 4-6). The Ames cab was configured to be similar to the Boeing cockpit. In addition to the IHADSS tracking hardware and the right-hand SSC installation, the Ames cockpit was modified to accommodate a left-hand SSC for vertical control. Both SSC mountings were adjustable to provide a comfortable orientation which minimized interaxis cross-coupling of control inputs. Optimized controller orientations are presented in Section 6.2.1.

ORIGINAL PAGE IS
OF POOR QUALITY

APPROACH TO AIRPORT SCENE - B.V. SIMULATOR

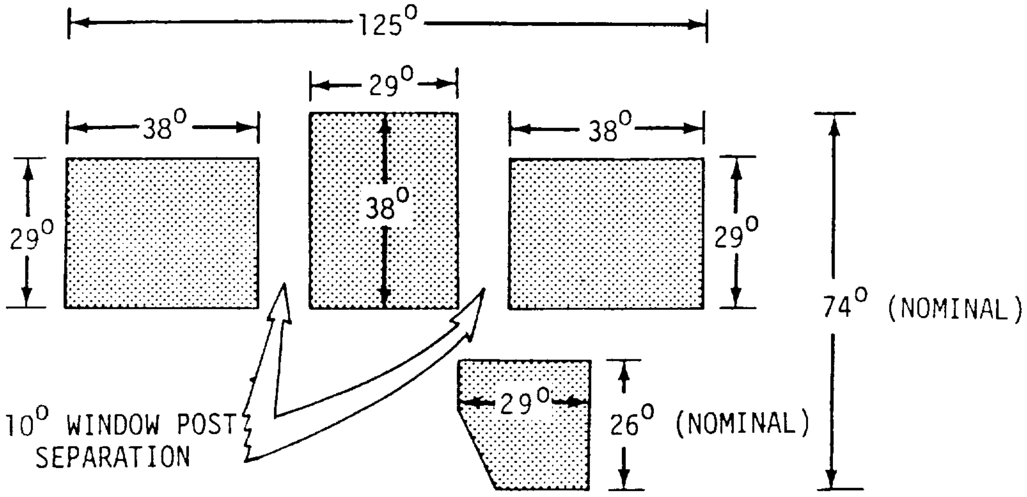
125°
29°
38°
38°
38°
29°
29°
74° (NOMINAL)
10° WINDOW POST SEPARATION
29°
26° (NOMINAL)

COCKPIT WINDOW FIELD OF VIEW

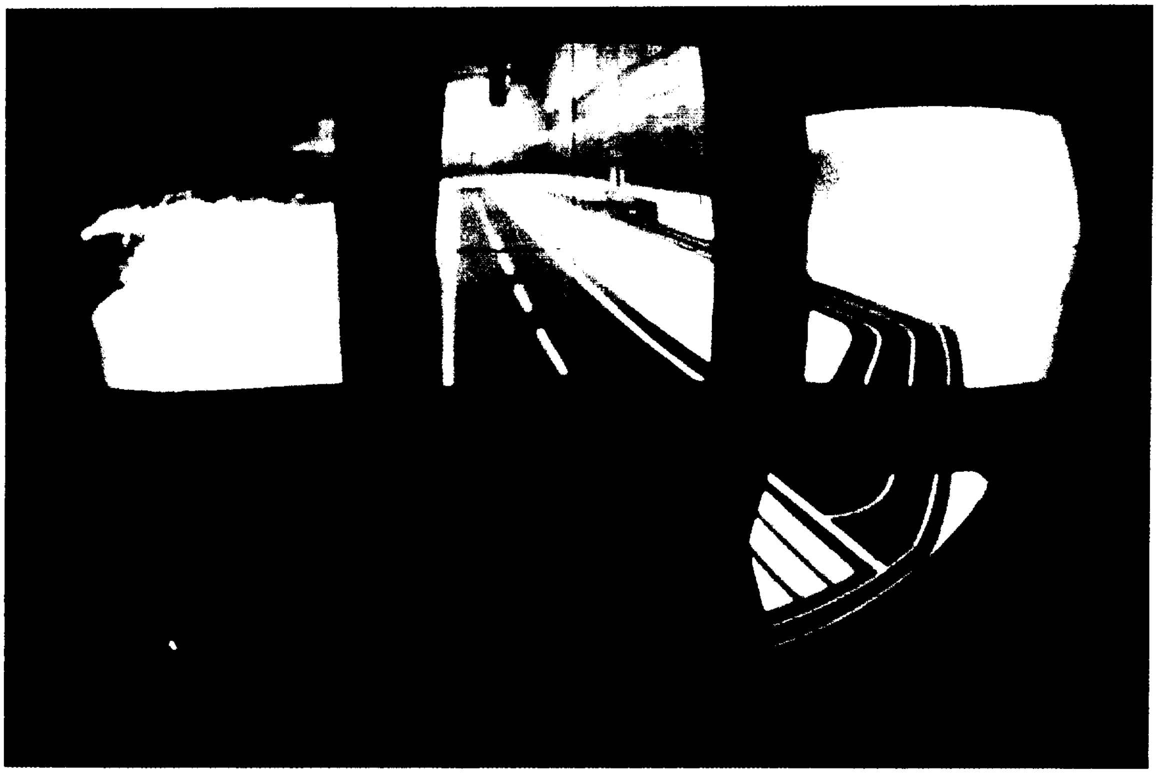

FINAL APPROACH TO AIRPORT

Figure 4-2

IHADSS HOVER MODE SYMBOLOGY

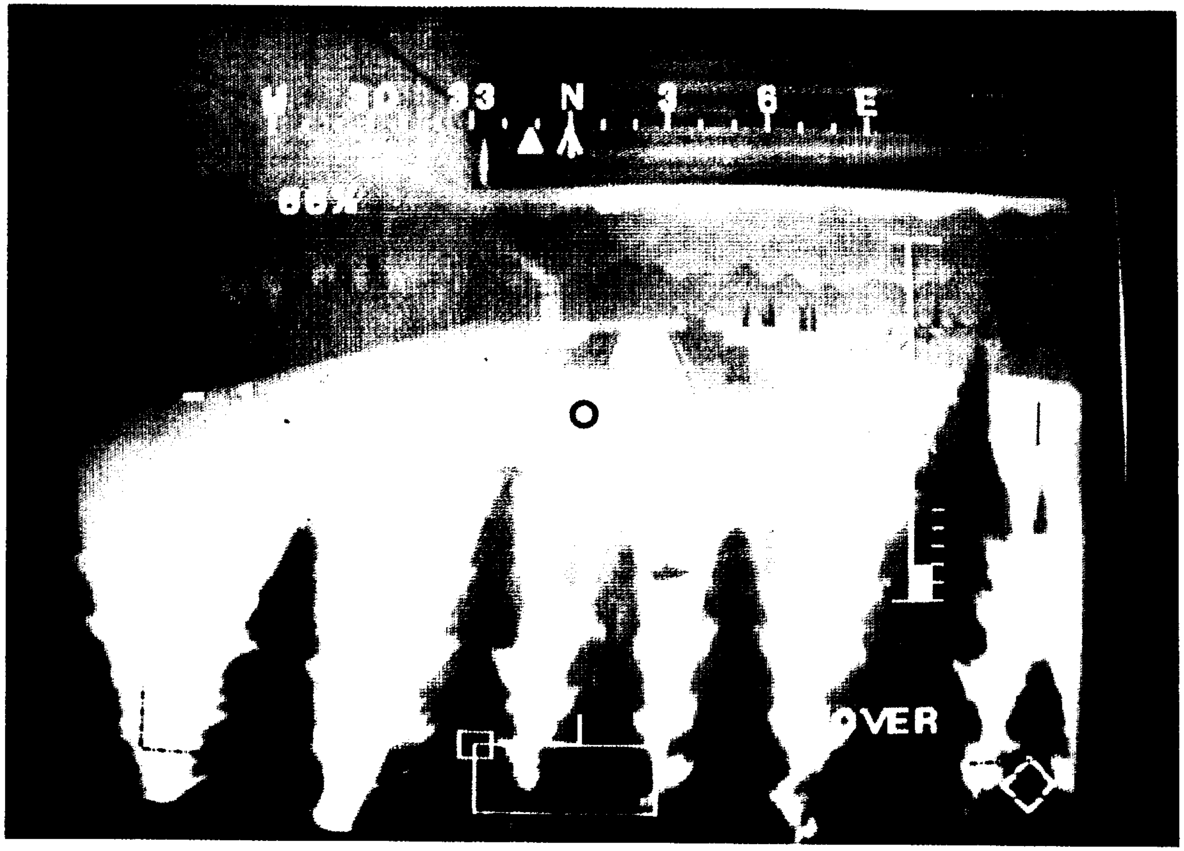
33
N
3
6
E
OVER

Figure 4-3

ORIGINAL PAGE IS
OF POOR QUALITY

VISUALLY COUPLED SYSTEM FOR ATTACK HELICOPTERS

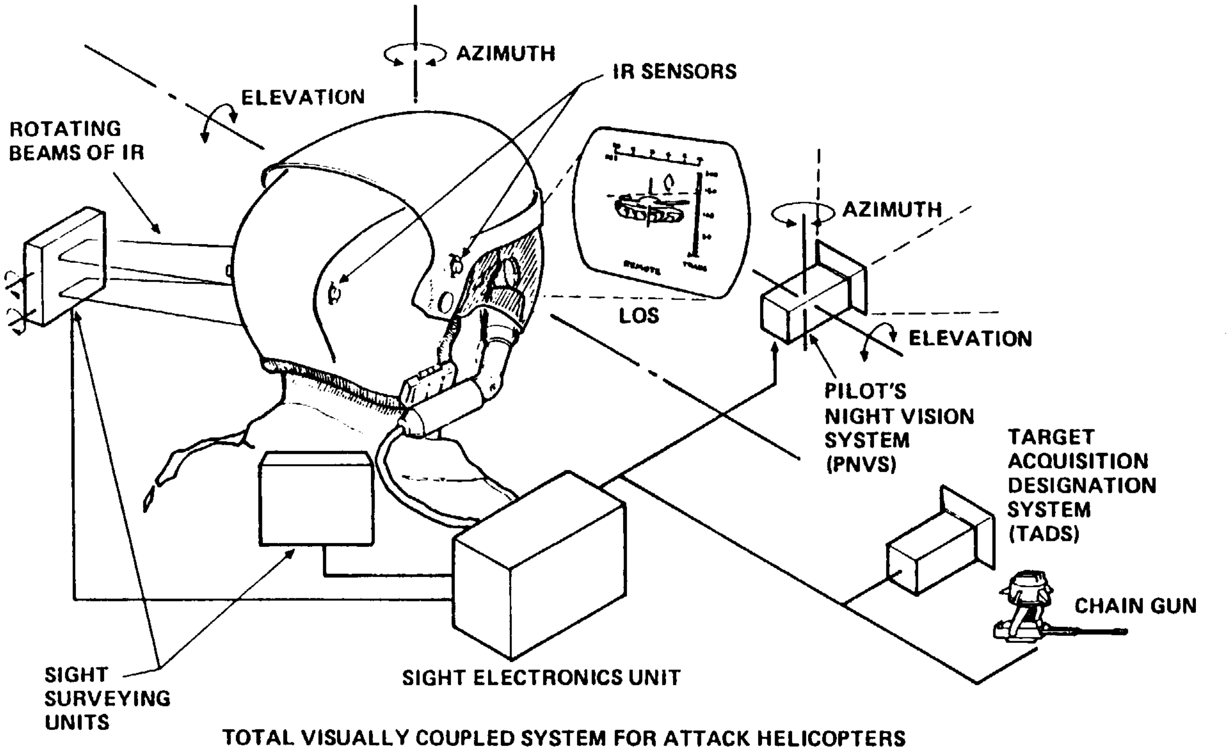
AZIMUTH
IR SENSORS
ELEVATION
ROTATING
BEAMS OF IR
AZIMUTH
LOS
ELEVATION
PILOT'S
NIGHT VISION
SYSTEM
(PNVS)
TARGET
ACQUISITION
DESIGNATION
SYSTEM
(TADS)
CHAIN GUN
SIGHT
SURVEYING
UNITS
SIGHT ELECTRONICS UNIT

TOTAL VISUALLY COUPLED SYSTEM FOR ATTACK HELICOPTERS

- HELMET MOUNTED DISPLAY AND SIGHT SYSTEM
- PNVS
- TADS
- CHAIN GUN

Figure 4-4

ACC/AFCS TERRAIN BOARD

ORIGINAL PAGE IS
OF POOR QUALITY

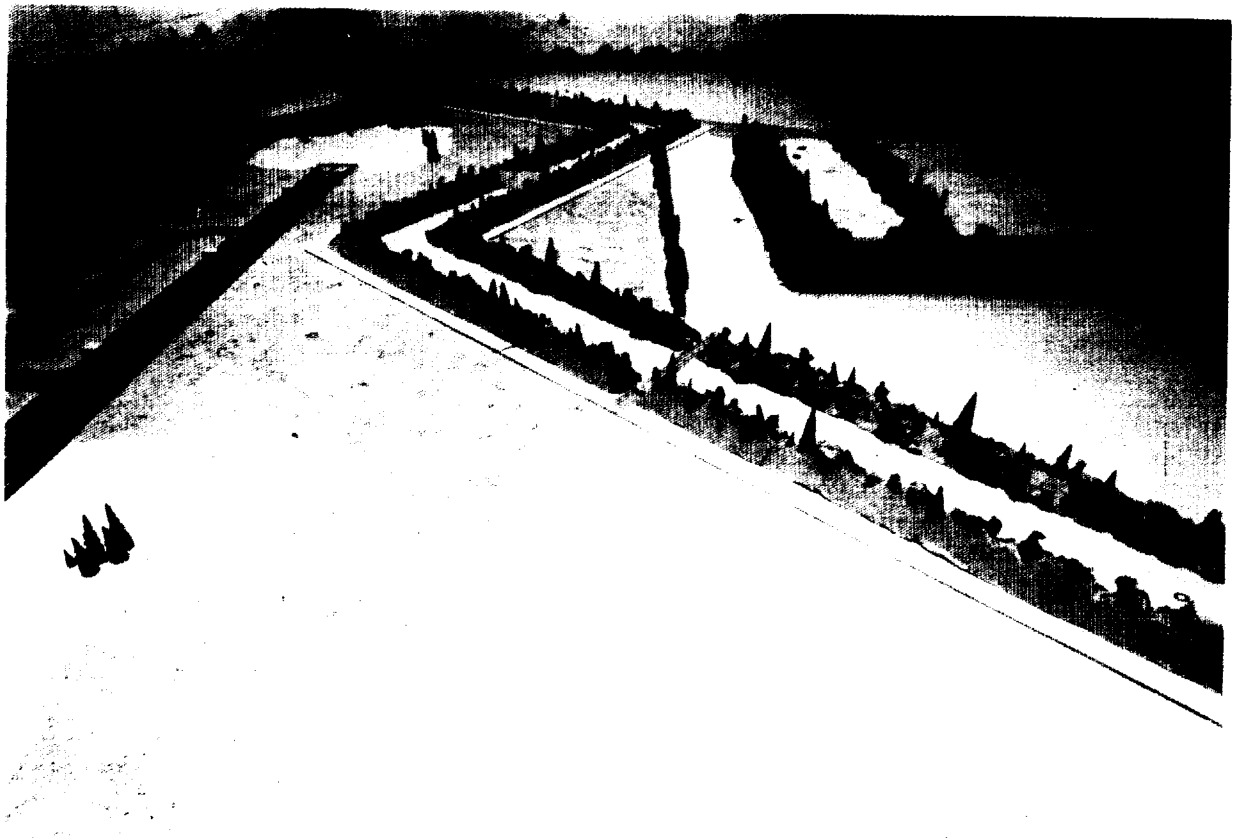

Figure 4-5

NASA-AMES VERTICAL MOTION SIMULATOR

ORIGINAL PAGE IS
OF POOR QUALITY

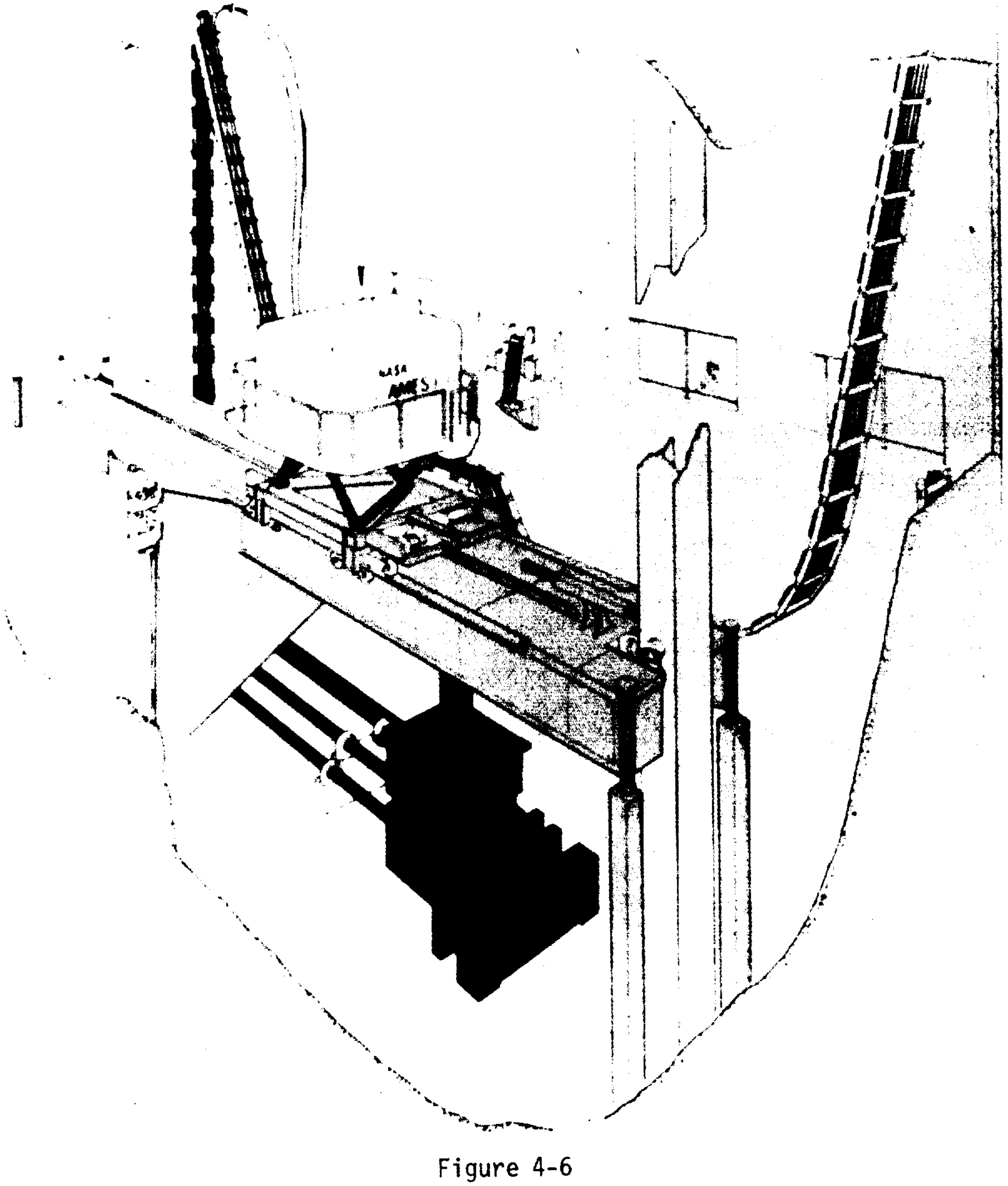

Figure 4-6

VMC Display

For the VMC portion of the evaluation performed during Phase 2 at NASA Ames, the visual scene was simulated using a four-window, color computer generated image (CGI) display system. Two data-bases were available with the CGI. One display contained an NOE course designed as a replica of the terrain board at Boeing Vertol. Figure 4-7 illustrates the CGI NOE course as seen through the center display window. Though the display appears to lack detail, the pilots found the perceived visual cues to be useful for NOE flight. In addition to the NOE data-base, an airport runway scene (Figure 4-8) was also available to perform Slalom and Approach-to-Hover Tasks. Figure 4-8 also shows the field of view provided by the windows in the Ames Cockpit.

IMC Display

During Phase 2B, when handling qualities were evaluated under IMC, the visual scene was simulated using a 300:1 scale terrain board and camera visual system. The same NOE course and airport runway with obstacles were constructed on a model board to perform identical tasks thereby allowing direct comparison of Phase 1 and Phase 2 data. The video signal from the camera probe visual system which simulated the forward-looking infrared (FLIR) sensor signal was mixed optically with the computer-generated symbols and presented to the pilot on the HMD.

4.2 AIRCRAFT MATH MODEL

During both phases of the ACC/AFCS study, simulation of the baseline flight vehicle (the UH-60A) was provided by a generic single main rotor helicopter math model. Both simulations included six-degree-of-freedom rigid body dynamics as well as main and tail rotor RPM degrees of freedom configured to represent the Black Hawk helicopter. Also included in both simulations were a canted tail rotor, control mixing, a movable programmed stabilator, and UH-60A fuselage aerodynamics. The NASA Ames model which is described in detail in References 5 and 6 contained three degree-of-freedom tip-path plane dynamics which were not included in the Boeing Vertol model.

Implementation of the UH-60A models was performed using data from References 7, 8 and 9. The Boeing Vertol model was first correlated with respect to flight test data from Reference 9. Figure 4-9 illustrates the good correlation obtained between UH-60A flight test data and simulation results for a specific set of trim conditions. A test pilot who flew both the production UH-60A and the Boeing simulator found no major handling qualities discrepancies and noted many similarities including inherent coupling characteristics.

Validation of both basic helicopter simulation models at Boeing Vertol and NASA-Ames was accomplished by a comparison of model

CGI DISPLAY — NOE COURSE

ORIGINAL PAGE IS
OF POOR QUALITY

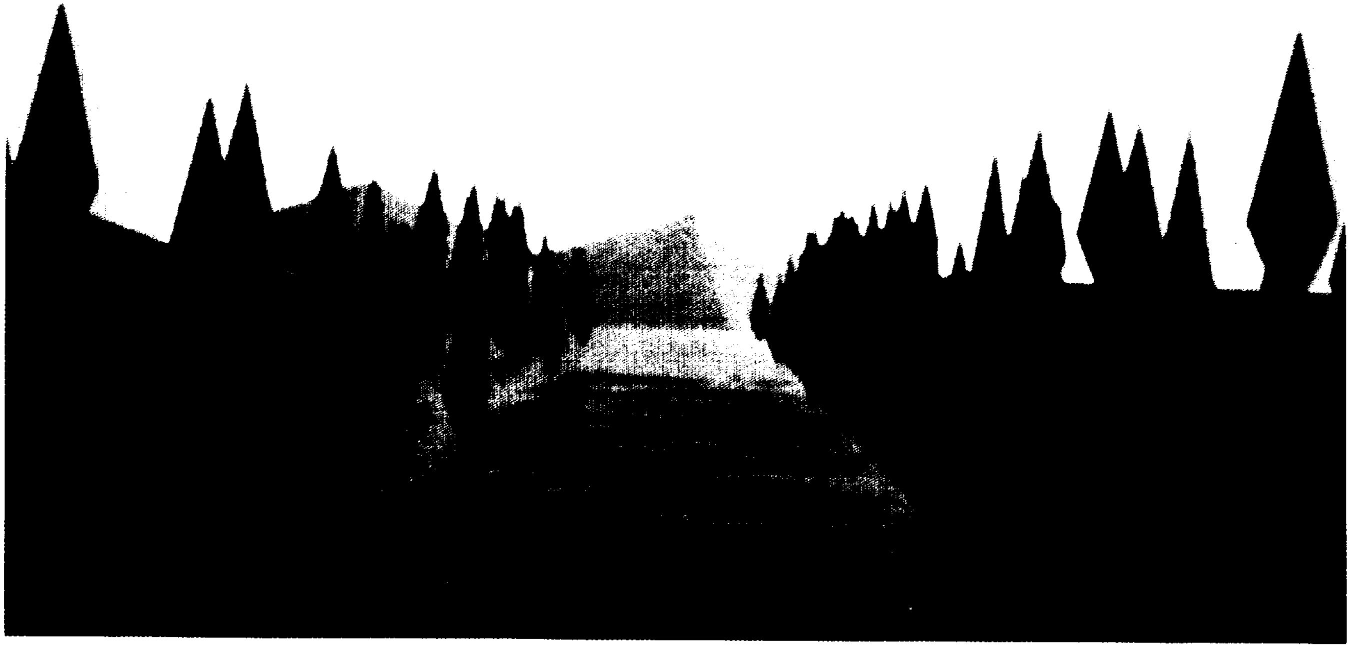

Figure 4-7

CGI DISPLAY - AIRFIELD RUNWAY FOR SLALOM TASK

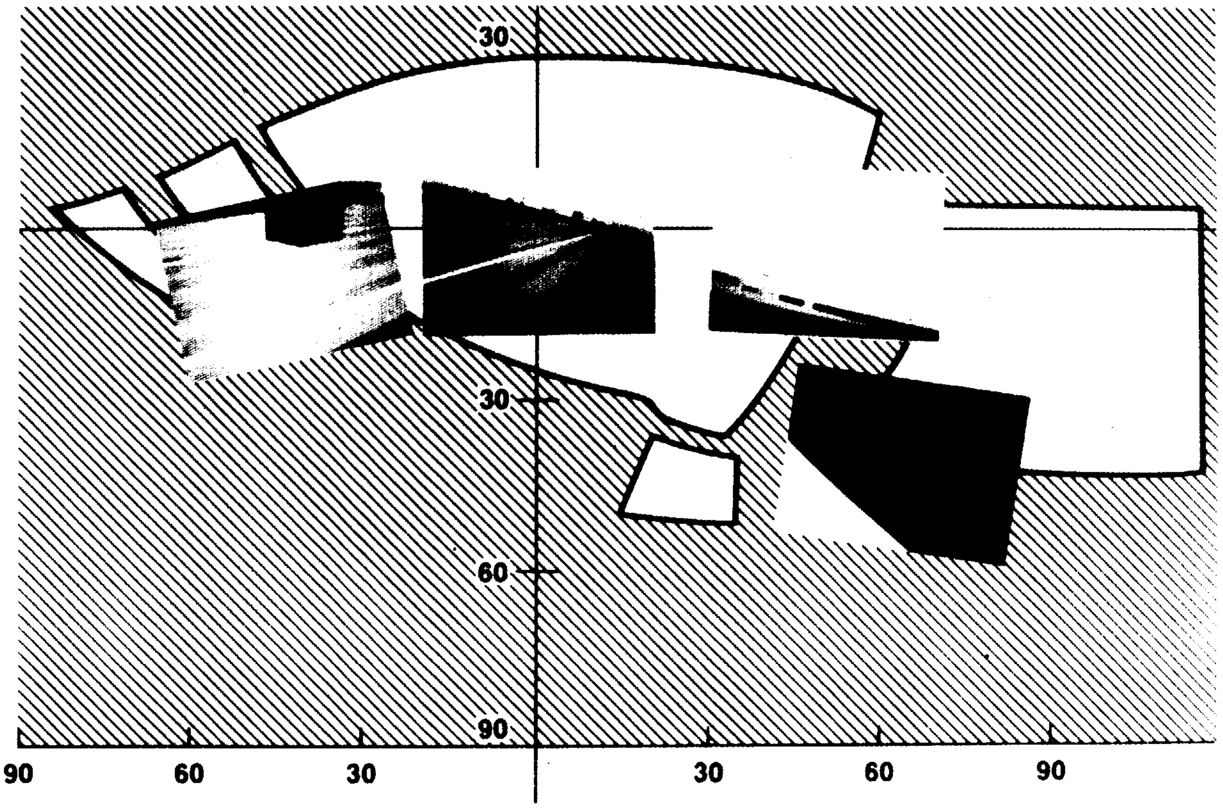
30
30
60
90
90
60
30
30
60
90

Figure 4-8

ORIGINAL PAGE IS
OF POOR QUALITY

UH-60A SIMULATION MATH MODEL CORRELATION WITH FLIGHT TEST DATA

CONTROL POSITIONS IN TRIMMED FORWARD FLIGHT

GROSS WEIGHT (LB)	LONG. CG LOCATION (FS)	DENSITY ALTITUDE (FT)	OAT (°C)	ROTOR SPEED (RPM)
16,420	359.4	5580	15.0	258

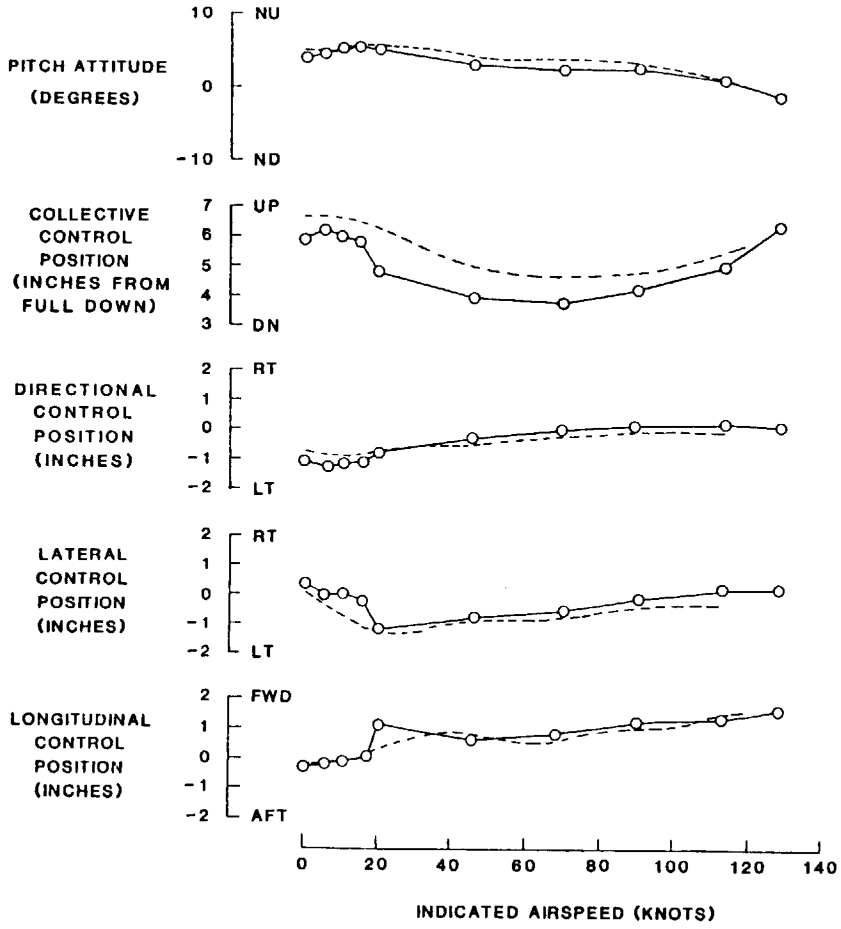

—○— FLIGHT TEST DATA FROM USAAEFA PROJECT 79-24

- - - - - BV SIMULATION DATA

Figure 4-9

trim data and small-perturbation, six-degree-of-freedom (6-DOF) stability and control derivatives. A complete listing of trim sheets and 6-DOF small perturbation stability derivatives generated by the Boeing Vertol simulation are contained in Appendix B. Cockpit control positions and helicopter attitude trim states for the simulations are compared in Figure 4-10. In addition to the comparison of static trim conditions, dynamic responses from both simulations were compared and good correlation was obtained.

Control Law Implementation

Control law modelling during Phase 1 was completed using a Boeing Vertol proprietary program called "VECEX". This program emulates dynamic system elements, such as lags, integrators, summers, in a manner similar to that used when programming an analog computer. Gains, time constants, and even control laws can be easily altered without requiring the program to be recompiled each time a change is made. VECEX uses a modular approach to control law modelling where a set of predefined mathematical algorithms, each defining standard control law elements are repeatedly called from the main routine. The use of this modular concept, where nodes are defined, provides a one to one correspondence between VECEX and the system functional block diagrams.

Design concepts for the ADOCS Demonstrator include a digital flight control system based on the H-5301 microprocessor. Coding similar to that of VECEX is used to minimize transition problems. A major difference between the VECEX used in Phase 1 simulations and the H-5301 coding is the method of arithmetic calculation; VECEX being floating point and the H-5301 being fixed point. To study the effect of fixed point arithmetic on the ADOCS control laws, a revised VECEX was developed featuring fixed point computation as well as variable computational time cycles. This new VECEX program used algorithms which duplicated the ones used by Honeywell in coding the 5301.

Simulations were conducted at Boeing Vertol using the fixed point VECEX program to determine scaling and time-frame requirements for the ADOCS control laws. Resolution problems which occurred because of scaling implementation were corrected prior to final control law definitions made to Honeywell. Sections of the control laws, or modules, were identified as to their time-frame constraints. For example, the PFCS is run at 40 Hz where many of the AFCS modules are run at 25 Hz.

Control laws for Phase 2 simulations at NASA-Ames were implemented using FORTRAN subroutines. Though this method did not allow the amount of flexibility that VECEX did, it proved to be reliable and time expedient.

UH-60A SIMULATION MATH MODEL CORRELATION

CONTROL POSITIONS IN TRIMMED FORWARD FLIGHT

GROSS WEIGHT (LB)	LONG. CG LOCATION (FS)	DENSITY ALTITUDE (FT)	OAT (°C)	ROTOR SPEED (RPM)
16,420	359.4	5580	15.0	258

- - - - - BV SIMULATION

——— NASA SIMULATION

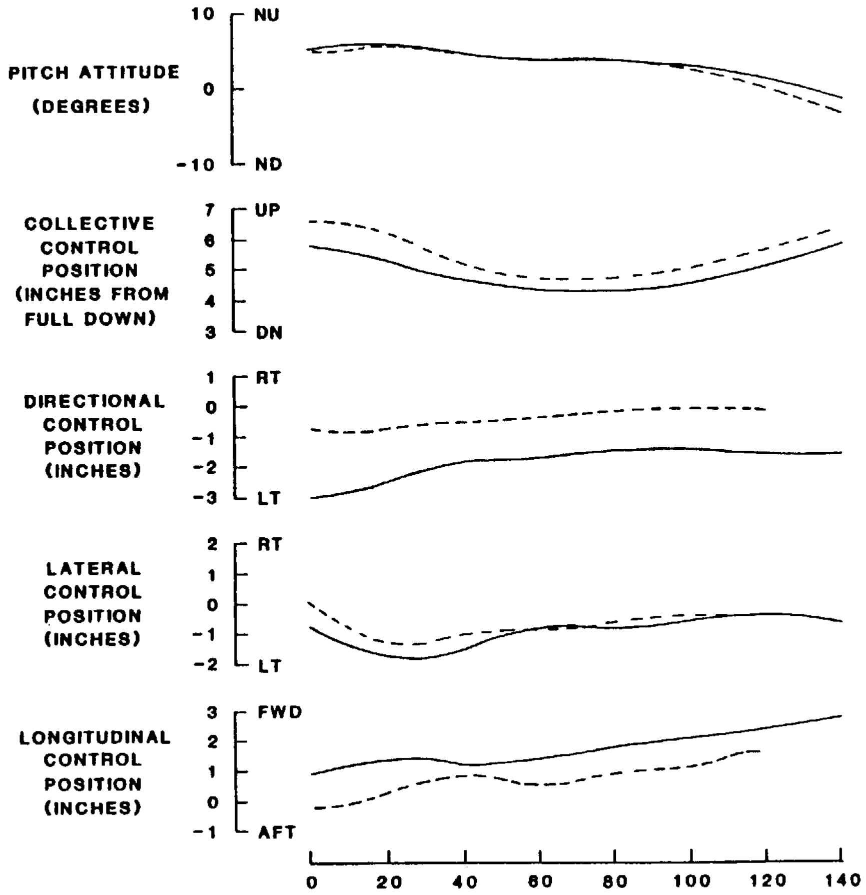

Figure 4-10

4.3 EVALUATION TASKS

Evaluation of total system (pilot, controllers, SCAS, displays) performance was accomplished using a variety of standardized tasks performed under both VMC and IMC. These tasks, are divided up into three main categories: 1) low-speed tasks, 2) high-speed tasks, and 3) transition tasks. During the performance of these tasks, no secondary duties (i.e. armament, communication, or navigation system management) were required of the pilot. The following paragraphs describe each task.

4.3.1 Low-Speed Tasks

Figure 4-11 illustrates the low-speed tasks used for evaluation of handling qualities during Phase 1 and Phase 2 simulation periods. The Acceleration/Deceleration Task was performed only for Phase 1, and the Precision Hover Task was added for Phase 2 simulations. Effects of larger motion cues and a simulated gust environment made this task important for defining control response shaping for precision hover. The following discussion defines each low-speed task in detail.

30-Knot Slalom

This low-speed lateral avoidance maneuver requires the pilot to fly around 50 ft. high obstacles placed 400 feet apart on the runway centerline. From a hover at 30 feet AGL, the pilot accelerates the helicopter to an airspeed of 30 knots. The pilot appropriately controls bank angle and heading to coordinate turns around the obstacles while maintaining a constant airspeed of 30 knots and an altitude of 30 feet throughout the maneuver.

Acceleration/Deceleration (Phase 1 only)

A forward translation of the helicopter that is performed while holding a lateral ground track parallel to the runway. From an initial hover position offset from the runway, the pilot accelerates the helicopter to a forward speed of 50 knots, followed by a deceleration maneuver to arrive at a desired hover position near the last runway obstacle. The pilot attempts to hold lateral ground track and altitude, as well as complete the task in minimum time.

Nap-of-the-Earth (NOE)

The NOE is a multi-axis control task requiring the pilot to fly through three legs of a narrow canyon (125 feet wide and 50 feet high), having two sharp turns (70° left and 80° right) and two obstacles (50 feet high), to reach a termination hover area. During the first leg of the course, an acceleration to 50 knots is performed before crossing a road, followed by a deceleration to 25 knots while maintaining a lateral ground

LOW-SPEED EVALUATION TASKS

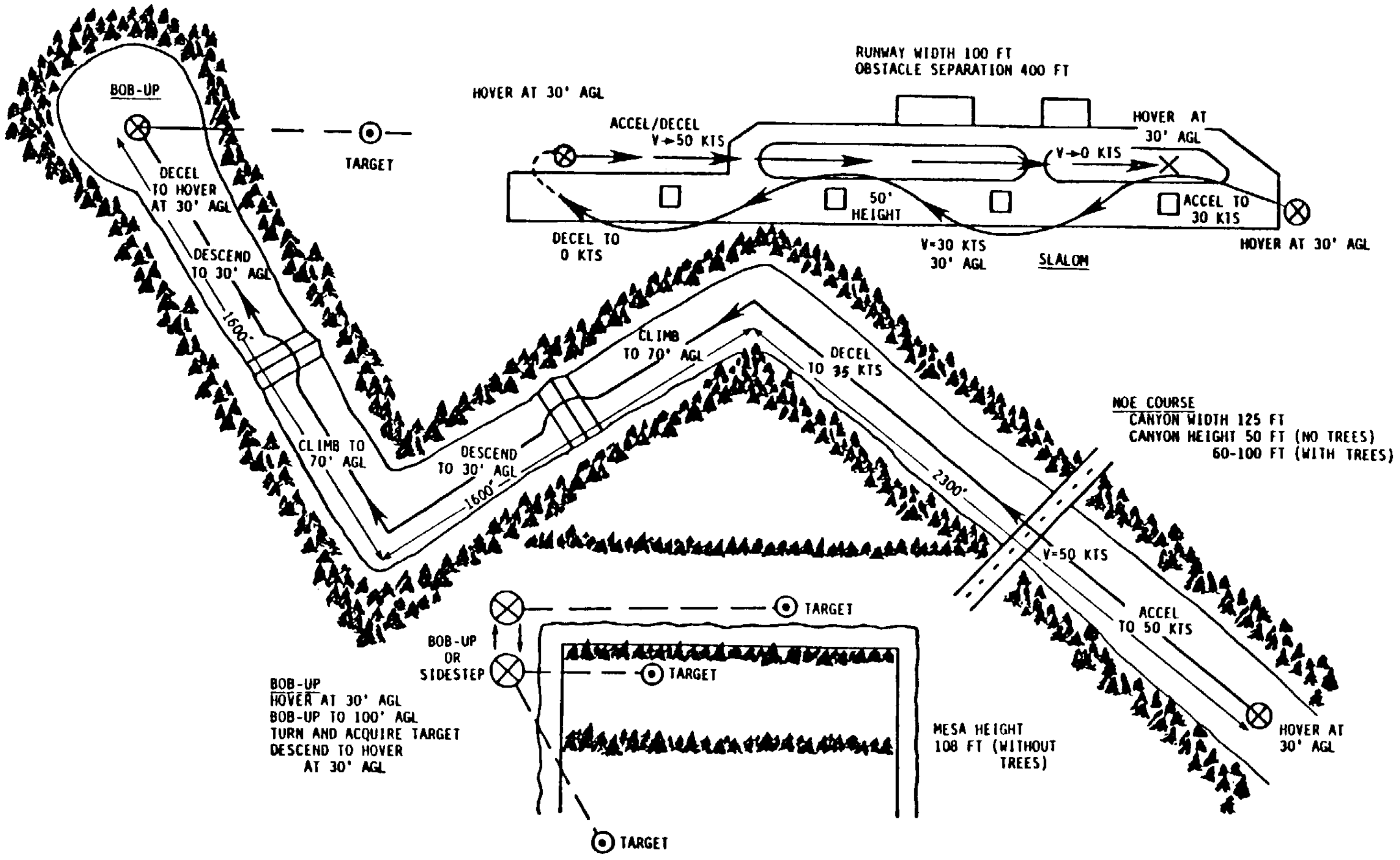
RUNWAY WIDTH 100 FT
OBSTACLE SEPARATION 400 FT
HOVER AT 30' AGL
ACCEL/DECEL
V→50 KTS
HOVER AT
30' AGL
V→0 KTS
50'
HEIGHT
ACCEL TO
30 KTS
DECEL TO
0 KTS
V=30 KTS
30' AGL
SLALOM
HOVER AT 30' AGL
BOB-UP
TARGET
DECEL
TO HOVER
AT 30' AGL
DESCEND
TO 30' AGL
1600'
CLIMB TO
70' AGL
DESCEND
TO 30' AGL
1600'
CLIMB
TO 70' AGL
DECEL
TO 35 KTS
2300'
NOE COURSE
CANYON WIDTH 125 FT
CANYON HEIGHT 50 FT (NO TREES)
60-100 FT (WITH TREES)
V=50 KTS
ACCEL
TO 50 KTS
HOVER AT
30' AGL
TARGET
BOB-UP
OR
SIDESTEP
TARGET
BOB-UP
HOVER AT 30' AGL
BOB-UP TO 100' AGL
TURN AND ACQUIRE TARGET
DESCEND TO HOVER
AT 30' AGL
MESA HEIGHT
108 FT (WITHOUT
TREES)
TARGET

Figure 4-11

track and an altitude of 30 feet. After executing a coordinated left turn to enter the second leg, the pilot must control altitude to fly over an obstacle and remask to 30 feet in as short a time as possible while attempting to maintain an airspeed of 25 knots. Following a sharp right turn, the pilot flies over a second obstacle, controls altitude back to 30 feet, and decelerates to a hover point in the termination area.

Bob-Up

The Bob-up is a multi-axis task consisting of a vertical unmask maneuver from 25 feet to 100 feet, a heading turn to acquire a target, and a vertical remask to the original hover height. The pilot attempts to hold a fixed horizontal ground position throughout the vertical unmask/remask and heading turn maneuvers.

Precision Hover (Phase 2 only)

This precision maneuvering task requires the pilot to descend from a 30 foot altitude to a 5 foot hover height while simultaneously translating longitudinally about 15 feet to position the helicopter close to a rock located in the center of the Bob-up area. A Precision Hover under VMC was maintained by positioning the rock in the lower right-hand window. Under IMC the rock located in the center of the Bob-up area was aligned with a marker on the canyon wall.

4.3.2 High-Speed Tasks

In addition to the low speed tasks, high-speed Slalom Tasks were defined for the Phase 2 simulation as illustrated in Figure 4-12. The 140-Knot Slalom Task could not be evaluated under IMC during Phase 2B since the maximum velocity of the camera probe was limited.

90-Knot Slalom

The slalom is a high-speed lateral avoidance task which requires the pilot to maneuver around 50 foot high obstacles placed 1000 feet apart on the runway centerline while maintaining a constant 90 knot airspeed, a 30 foot AGL altitude, and a specific lateral ground-track determined by runway width. Typical roll rates of 20 degrees/second and roll attitudes of 35 degrees were required to execute this maneuvering task.

140-Knot Slalom

This task was performed similar to the 90-Knot Slalom Task except that the pilot flies between every other obstacle (2000 foot separation) to accommodate the higher speed. Higher bank angles (45 degrees) and roll rates (25 degrees/sec) were required to perform the Slalom Task at 140 knots.

HIGH SPEED AND TRANSITION TASKS

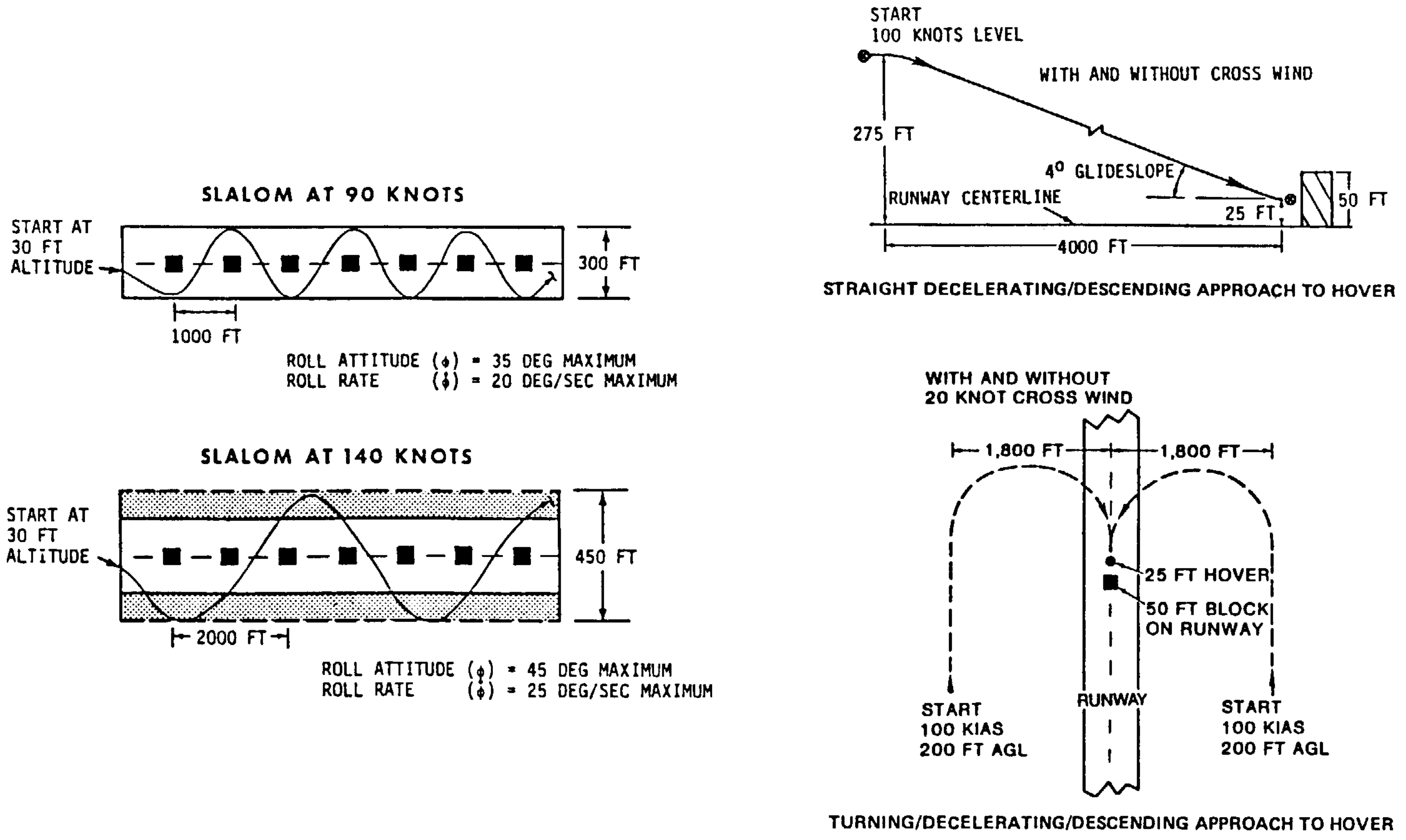
SLALOM AT 90 KNOTS
START AT 30 FT ALTITUDE
300 FT
1000 FT
ROLL ATTITUDE (ϕ) = 35 DEG MAXIMUM
ROLL RATE (ϕ̇) = 20 DEG/SEC MAXIMUM
SLALOM AT 140 KNOTS
START AT 30 FT ALTITUDE
450 FT
2000 FT
ROLL ATTITUDE (ϕ) = 45 DEG MAXIMUM
ROLL RATE (ϕ̇) = 25 DEG/SEC MAXIMUM
START
100 KNOTS LEVEL
WITH AND WITHOUT CROSS WIND
275 FT
4° GLIDESLOPE
RUNWAY CENTERLINE
25 FT
50 FT
4000 FT
WITH AND WITHOUT
20 KNOT CROSS WIND
1,800 FT
1,800 FT
25 FT HOVER
50 FT BLOCK ON RUNWAY
RUNWAY
START
100 KIAS
200 FT AGL
START
100 KIAS
200 FT AGL

STRAIGHT DECELERATING/DESCENDING APPROACH TO HOVER

TURNING/DECELERATING/DESCENDING APPROACH TO HOVER

Figure 4-12

4.3.3 Transition Tasks

Approach-to-Hover Tasks (Figure 4-12) were included to evaluate multi-axis maneuvering during transition from forward to low speed flight. This task enabled evaluation of control law switching and ability to precisely arrive at a desired hover location.

Straight-in approach to hover

This task started with the helicopter in level flight at 100 knots and at 275 ft AGL. The pilot was required to descend and decelerate on a 4° glide slope over a horizontal distance of 4000 ft to a 25 ft hover point in front of a 50 ft obstacle.

Turning approach to hover

This task also emphasized forward flight to low-speed transition, and required the pilot to perform a left or right descending, decelerating turn from 100 knots and 200 ft AGL and arrive at a 25 ft hover in front of a 50 ft obstacle on the runway centerline.

4.4 PILOTS' EXPERIENCE SUMMARY

Seven simulation test pilots participated in the ACC/AFCS study. Their backgrounds include related simulation or flight test experience with side-stick controllers and/or exposure to IMC visual display systems. Table 4-2 presents the names of all the test pilots, their affiliation and experience, and in addition, summarizes their participation in flight hours for each simulation phase. Subsequent to Phase 1A activities, two evaluation pilots were given 3 hours of IHADSS flight training on the PNVS Surrogate Trainer at the U.S. Army Yuma Proving Ground to assess realism of the simulation and improve their proficiency with IHADSS. In addition, Pilot A who was the main pilot for these experiments was given familiarization flights in an UH-60A.

4.5 DATA COLLECTION AND ANALYSIS

Both pilot evaluation data and quantitative system performance data were collected. The pilot evaluation data consist of Cooper-Harper handling qualities ratings and tape-recorded pilot commentary. At the end of each evaluation run the pilot assigned a single numerical Cooper-Harper rating to the particular controller/SCAS/task combination under investigation. In addition, the pilot was asked to provide commentary to help identify those aspects of the system that most heavily influenced the rating. The quantitative system performance data consist of magnetic tape recordings of flight parameters relative to a reference hover position or desired flight path.

SUMMARY OF EVALUATION TEST PILOTS' EXPERIENCE

PILOT NAME	AFFILIATION	FLIGHT TIME (HOURS)		RELATED EXPERIENCE		ACC/AFCS SIMULATION HOURS				
						PHASE 1			PHASE 2	
		HELICOPTER FIXED WING	TOTAL	SIDE-STICK CONTROLLER DEVELOPMENT	VISUAL DISPLAYS FOR IMC	1A	1B	1C	2A	2B
A. L. Freisner	Boeing Vertol	3600(H) 2800(F)	6400	X	X*	45:45	32:25	31:00	32:40	3:35
S. Kereliuk	NAE-Canada	950(H) 6450(F)	7400	X	—	—	—	—	13:30	—
R. Merrill	U. S. Army	2500(H) 700(F)	3200	X	X	7:10	—	—	—	—
M. Morgan	NAE-Canada	450(H) 5600(F)	6050	X	—	14:30	10:10	9:00	—	3:35
P. Morris	U. S. Army	1065(H) 2520(F)	3585	X	X	—	13:50	—	5:20	10:50
G. Tucker	NASA-Ames	2745(H) 1200(F)	3945	X	X*	14:05	11:45	15:00	14:05	11:55
J. Tulloch	Boeing Vertol	5000(H) 1000(F)	6000	X	—	—	—	—	—	25:00

*IHADDS TRAINING ON PNVS SURROGATE TRAINER INCLUDED

Table 4-2

Experimental results presented in Section 5.0 (Phase 1) and Section 6.0 (Phase 2) are based on an analysis of pilot ratings and comments. The results are summarized using averaged pilot ratings to define general trends and explain pilot qualitative comments. Time histories are also provided for specific runs to illustrate pilot/system performance.

Data Organization

In order to systematically investigate the large number of possible task/controller/SCAS combinations and to assist analysis of the results, all pilot rating data were organized into primary/secondary SCAS configuration matrices. The primary configuration matrix consists of combinations of controller configurations, ie (4+0), (3+1) Pedal, (3+1) Collective, and (2+1+1), and pitch/roll SCAS configurations with a fixed directional and vertical SCAS configuration -- yaw rate command/heading hold and vertical rate command/attitude hold, respectively. An effort was made to evaluate all elements of the primary matrix for all tasks under both VMC and IMC. In addition, two velocity command systems (one with velocity stabilization and the other with position hold) were also included in the primary matrix for the Bob-up Task. For each element of the primary matrix, a secondary configuration matrix was evaluated including variations of the yaw and vertical SCAS configuration for a fixed combination of controller configuration and pitch/roll SCAS configuration. Appendix C contains all pilot rating data for both Phase 1 and Phase 2 organized into primary/secondary matrices.

Figure 4-13 presents a typical matrix of data gathered for the NOE task and performed under IMC with the IHADSS. Each matrix element contains an average rating for each pilot who evaluated the particular configuration combination, as well as the number of test data points included in the average rating. A mean of the individual average ratings in each block is also calculated. Various levels of the handling qualities rating scale are shaded on the matrix to emphasize where the major change from acceptable to unacceptable occurs. It can be seen that Level 1 flying qualities were not achieved for the NOE Task under IMC for any controller configuration. The interaction of SCAS/controller configurations can be determined from the matrix. An attitude command system achieved Level 2 ratings regardless of the stabilization type for all controller configurations with the exception of the 4-axis stiff-stick. A RA/AT system exhibited marginal Level 2 flying qualities for the (2+1+1) and (3+1) Collective configurations.

Secondary SCAS matrices are also shown on Figure 4-13. An improvement from Level 3 to Level 2 ratings occurred when a yaw acceleration command was implemented for directional control in

SAMPLE CONTROLLER/SCAS CONFIGURATION MATRICIES-NOE TASK

(IMC)

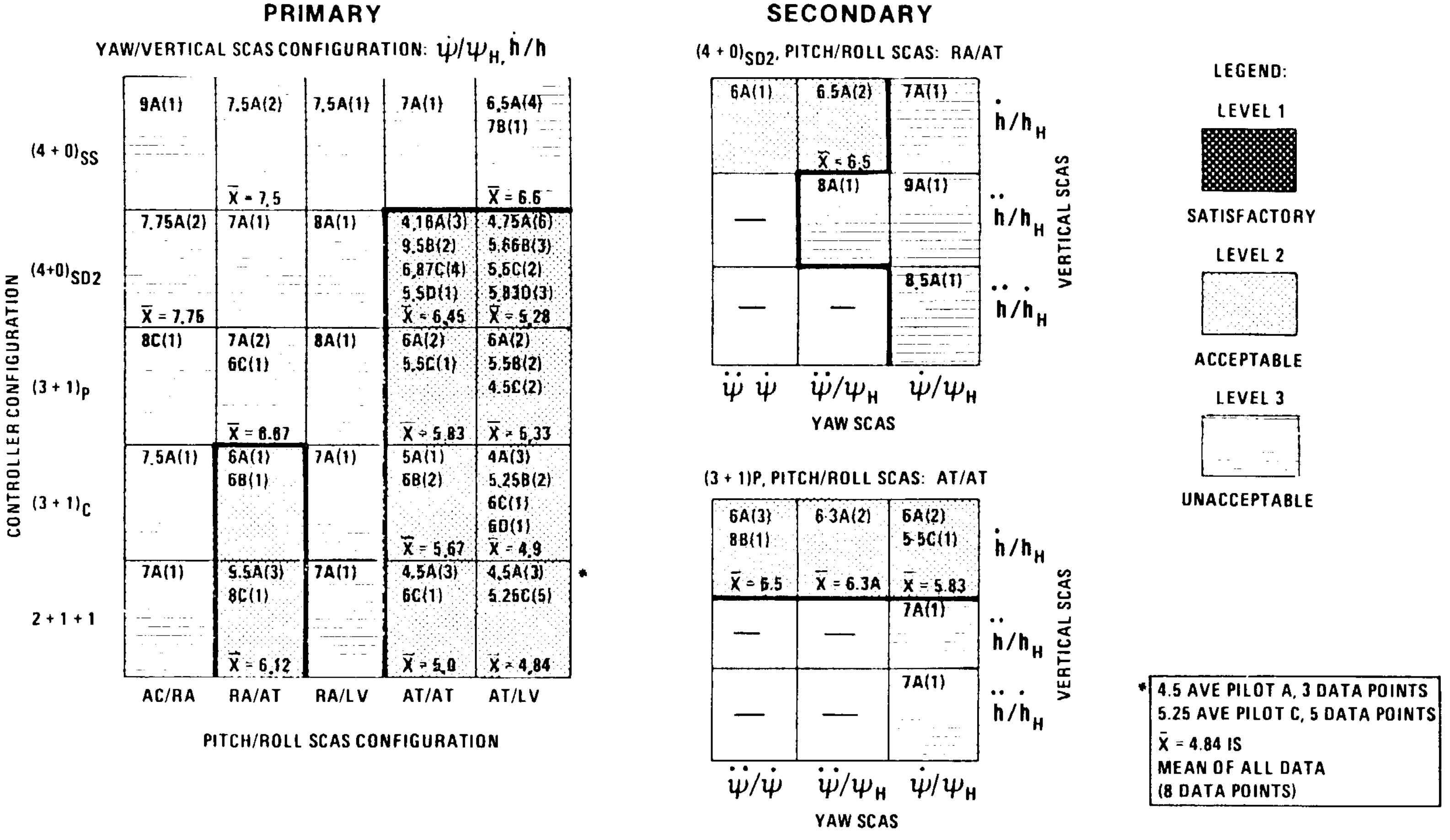

PRIMARY

YAW/VERTICAL SCAS CONFIGURATION: $\dot{\psi}/\psi_H, \dot{h}/h$

CONTROLLER CONFIGURATION	AC/RA	RA/AT	RA/LV	AT/AT	AT/LV
$(4+0)_{SS}$	9A(1)	7.5A(2) $\bar{X}$ = 7.5	7.5A(1)	7A(1)	6.5A(4) 7B(1) $\bar{X}$ = 6.6
$(4+0)_{SD2}$	7.75A(2) $\bar{X}$ = 7.76	7A(1)	8A(1)	4.16A(3) 9.5B(2) 6.87C(4) 5.5D(1) $\bar{X}$ = 6.45	4.75A(6) 5.66B(3) 5.6C(2) 5.83D(3) $\bar{X}$ = 5.28
$(3+1)_P$	8C(1)	7A(2) 6C(1) $\bar{X}$ = 6.67	8A(1)	6A(2) 5.5C(1) $\bar{X}$ = 5.83	6A(2) 5.5B(2) 4.5C(2) $\bar{X}$ = 5.33
$(3+1)_C$	7.5A(1)	6A(1) 6B(1)	7A(1)	5A(1) 6B(2) $\bar{X}$ = 5.67	4A(3) 5.25B(2) 6C(1) 6D(1) $\bar{X}$ = 4.9
2 + 1 + 1	7A(1)	5.5A(3) 8C(1) $\bar{X}$ = 6.12	7A(1)	4.5A(3) 6C(1) $\bar{X}$ = 5.0	4.5A(3) 5.26C(5) $\bar{X}$ = 4.84 *

PITCH/ROLL SCAS CONFIGURATION

SECONDARY

$(4+0)_{SD2}$, PITCH/ROLL SCAS: RA/AT

VERTICAL SCAS	$\ddot{\psi}\ \dot{\psi}$	$\ddot{\psi}/\psi_H$	$\dot{\psi}/\psi_H$
$\dot{h}/h_H$	6A(1)	6.5A(2) $\bar{X}$ = 6.5	7A(1)
$\ddot{h}/h_H$	—	8A(1)	9A(1)
$\ddot{h}/\dot{h}_H$	—	—	8.5A(1)

YAW SCAS

(3 + 1)P, PITCH/ROLL SCAS: AT/AT

VERTICAL SCAS	$\ddot{\psi}/\dot{\psi}$	$\ddot{\psi}/\psi_H$	$\dot{\psi}/\psi_H$
$\dot{h}/h_H$	6A(3) 8B(1) $\bar{X}$ = 6.5	6.3A(2) $\bar{X}$ = 6.3A	6A(2) 5.5C(1) $\bar{X}$ = 5.83
$\ddot{h}/h_H$	—	—	7A(1)
$\ddot{h}/\dot{h}_H$	—	—	7A(1)

YAW SCAS

LEGEND:

LEVEL 1 SATISFACTORY

LEVEL 2 ACCEPTABLE

LEVEL 3 UNACCEPTABLE

* 4.5 AVE PILOT A, 3 DATA POINTS
5.25 AVE PILOT C, 5 DATA POINTS
$\bar{X}$ = 4.84 IS
MEAN OF ALL DATA
(8 DATA POINTS)

Figure 4-13

place of yaw rate command for the (4+0) MSI-SD2 and RA/AT combination. In contrast, the (3+1) Pedal and AT/AT combination degraded to a Level 3 rating when vertical acceleration command was used in place of vertical rate command.

4.6 OTHER EXPERIMENTAL CONSIDERATIONS

In order to maximize the number of pilot evaluations in a typical simulation session, the controllers used on the pilot's right- and left-hand side and the task performed by the pilot remained fixed for the entire session. Changes to the controller configuration were made during a session only after investigating a full spectrum of AFCS characteristics for that particular configuration. In general, (4+0) configurations were evaluated first, (3+1) second, and (2+1+1) last. Before each evaluation run, the pilots were told the command response-type for each axis. They were not informed of the stabilization level in each axis or whether the automatic turn coordination feature was on or off. For the low speed tasks the pilots were given time to feel out the system before each data run, and for the high speed and transition tasks they were allowed to take a practice run, if desired.

Wind Shear and Turbulence Model

The Precision Hover and Bob-up Tasks were evaluated under a specified level of wind and turbulence to evaluate the effects on system and pilot performance. The Precision Hover Task was performed both with and without a 20 knot headwind, and the Bob-up Task was evaluated both with and without a wind shear of 6 knots at 20 ft increasing to 50 knots at 200 ft. The vertical turbulence intensity simulated for both tasks was 10% of the mean wind speed measured at 20 ft AGL, and the horizontal turbulence intensity was 20% of the mean wind speed measured at 20 ft above ground level (AGL), and the horizontal turbulence intensity was 20% of the mean wind speed measured at 20 ft AGL. This low-altitude turbulence model is described in detail in Reference 10.

5.0 PHASE 1 SIMULATION RESULTS

Three piloted simulations (Phases 1A, 1B, and 1C), were conducted at Boeing Vertol to evaluate the control law and display concepts and alternate controller configurations developed from the Phase 1 literature review and analysis as reported in Volume 2 and Reference 11). Phase 1 simulations concentrated entirely on the low-speed portion of the scout/attack helicopter mission and utilized a total of 204 piloted flight hours. Experiments to examine high-speed and transition flight were conducted during Phase 2 (References 3 and 12) and results are reported in Section 6.0.

A simulation experiment flow diagram for Phase 1 which illustrates controller/SCAS evaluation and development activities is given in Figure 5-1. Initial Phase 1A activity was spent validating the UH-60A simulation, defining tasks, and familiarizing evaluation pilots with the Boeing Vertol simulator and the IHADSS. The majority of remaining Phase 1A simulation time was dedicated toward side-stick controller development, ie., (1) the selection of proper command response sensitivities in all axes, and (2) the evaluation of four candidate side-stick controller configurations having different force/deflection characteristics. Based on results of Phase 1A, a modified 4-axis small-deflection controller (MSI-SD2) was designed and manufactured for subsequent Phase 1 simulation (Phases 1B and 1C). Using the modified 4-axis side-stick controller, Phases 1B and 1C investigated the interactive effects of various controller configurations and command/stabilization systems on handling qualities. As described in Section 4.5, the investigation was performed considering variations of pitch and roll command/stabilization characteristics in a primary SCAS/controller configuration matrix and vertical and directional SCAS configuration variations as part of a secondary matrix.

5.1 CONTROLLER DEVELOPMENT

In addition to IHADSS familiarization, Phase 1A activity accomplished controller development for follow-on simulation periods. Acceptable control response sensitivities were defined for the generic CMD/STAB systems, and four candidate 4-axis side-stick controller configurations based on the Phase 1 literature review and analysis (Volume 2) were evaluated. Results are discussed below according to two major topics: (1) selection of control response characteristics, and (2) evaluation of controller force/deflection characteristics.

5.1.1 Selection of Control Response Characteristics

Before different controller configurations (i.e. (4+0), (3+1), or (2+1+1)) were evaluated, a set of control response characteristics for the four control axes and the generic system types described previously in Section 3.2 were defined through a series of mini-experiments. Response time constants and

PHASE 1 SIMULATION FLOW DIAGRAM

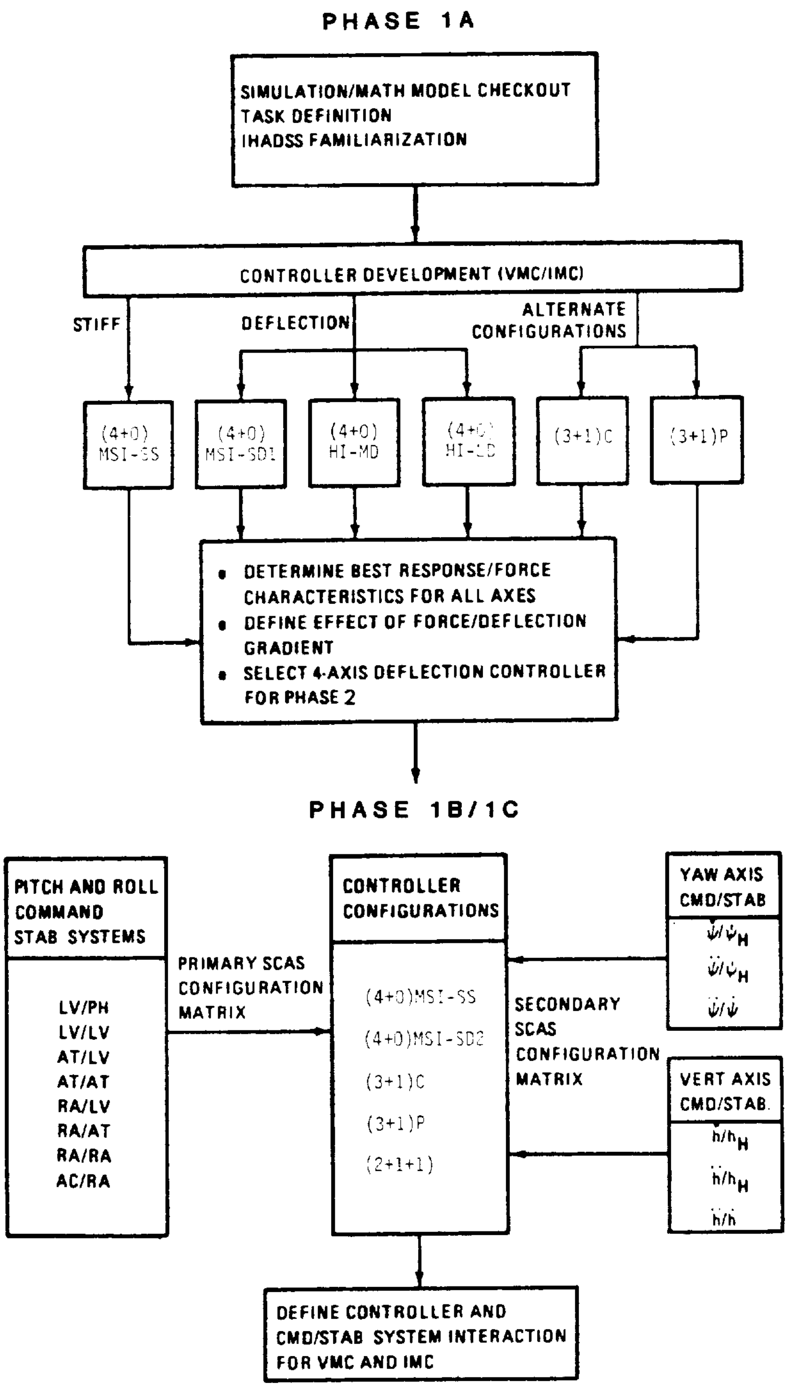
PHASE 1A
SIMULATION/MATH MODEL CHECKOUT
TASK DEFINITION
IHADSS FAMILIARIZATION
CONTROLLER DEVELOPMENT (VMC/IMC)
STIFF
DEFLECTION
ALTERNATE CONFIGURATIONS
(4+0) MSI-SS
(4+0) MSI-SD1
(4+0) HI-MD
(4+0) HI-LD
(3+1)C
(3+1)P
• DETERMINE BEST RESPONSE/FORCE CHARACTERISTICS FOR ALL AXES
• DEFINE EFFECT OF FORCE/DEFLECTION GRADIENT
• SELECT 4-AXIS DEFLECTION CONTROLLER FOR PHASE 2
PHASE 1B/1C
PITCH AND ROLL COMMAND STAB SYSTEMS
LV/PH
LV/LV
AT/LV
AT/AT
RA/LV
RA/AT
RA/RA
AC/RA
PRIMARY SCAS CONFIGURATION MATRIX
CONTROLLER CONFIGURATIONS
(4+0)MSI-SS
(4+0)MSI-SD2
(3+1)C
(3+1)P
(2+1+1)
SECONDARY SCAS CONFIGURATION MATRIX
YAW AXIS CMD/STAB
$\dot{\psi}/\dot{\psi}_H$
$\ddot{\psi}/\dot{\psi}_H$
$\ddot{\psi}/\dot{\psi}$
VERT AXIS CMD/STAB.
$\dot{h}/h_H$
$\ddot{h}/h_H$
$\ddot{h}/\dot{h}$
DEFINE CONTROLLER AND CMD/STAB SYSTEM INTERACTION FOR VMC AND IMC

Figure 5-1

sensitivities were varied within the command model and effects on controllability evaluated. A set of best response values was selected, initially for the stiff controller, and the same set of values was then evaluated using the three alternate 4-axis deflection controllers. Additional variations were made about the nominal response values to define the effects on pilot ratings and task performance.

This control response selection process is depicted by Figure 5-2. Roll attitude sensitivities were evaluated for the 30-Knot Slalom maneuver with the various 4-axis controllers. Pilot comments indicated a range where the roll control sensitivity was too high producing a tendency to overcontrol. In contrast, low roll attitude sensitivities less than 4.0 degrees/lb. resulted in heavy control forces and sluggish response characteristics. The best pilot ratings were obtained when all controllers had a roll attitude sensitivity of approximately 6.0 degrees/lb. Figure 5-2 also shows that pilot ratings of the large-deflection controller were generally degraded compared with the other configurations, and demonstrated a rapid degradation as control response sensitivities were reduced and/or control forces became heavy. The same tendency to degrade quickly was evident with the stiff-stick. The small-deflection controller was much more tolerant to changes in sensitivity as indicated by the relatively shallow slope in the high sensitivity range. Best ratings were achieved with the small-deflection and medium-deflection controllers in the range from 5.5 to 7.5 degrees/lb.

The same procedure was followed to select pitch/roll rate and longitudinal/lateral velocity response characteristics.
A nominal roll rate command sensitivity was determined as illustrated by Figure 5-3. Pilot rating data for the NOE Task are presented versus roll rate sensitivity. A similar trend of data is seen relative to pilot rating data presented for variations of attitude command sensitivity (Figure 5-3). Roll rate sensitivities above 4.5 deg/sec/lb tended to be overly sensitive causing the pilot to PIO. Sensitivities below 2.5 deg/sec/lb caused pilot ratings to rapidly degrade due to undesirable high control forces. A roll rate sensitivity of 3.5 deg/sec/lb was chosen since it provided best ratings. The data shown on Figure 5-3 also indicate the various pitch sensitivities used in this evaluation. As indicated, the variation in pitch sensitivities is small compared to the variation in the roll sensitivities being investigated. Therefore pitch axis variations were not considered significant.

Table 5-1 summarizes the final selected response characteristics for all generic command system types. Except for the acceleration command response, characteristics are approximated by an equivalent first-order system response. The pitch and

CONTROL RESPONSE SELECTION PROCESS

TASK: 30 KNOT SLALOM SCAS CONFIGURATION: AT/LV

VMC

DATA FROM ALL PILOTS

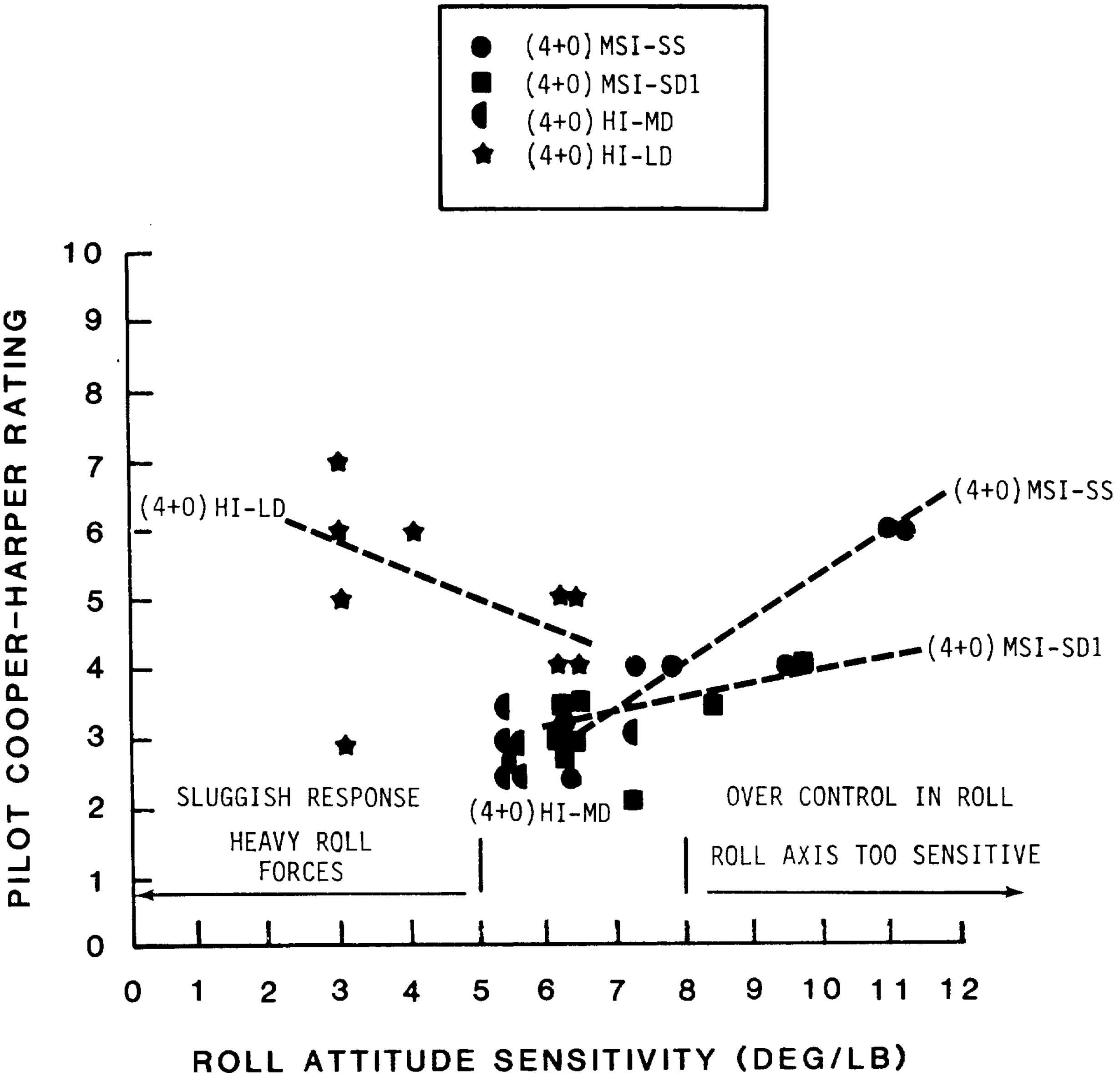

Figure 5-2

SELECTION OF ROLL RATE COMMAND SENSITIVITY

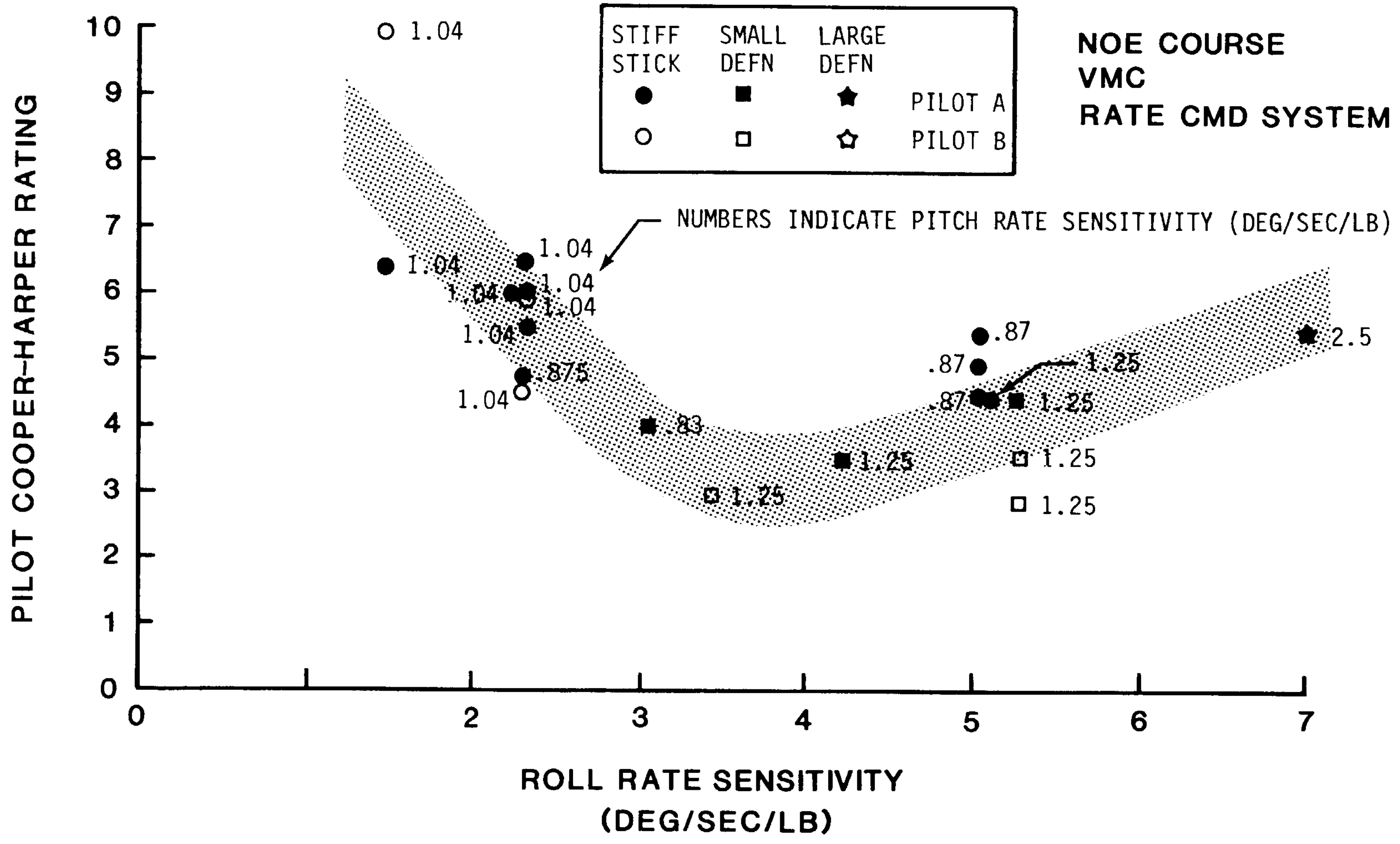

Figure 5-3

SELECTED CONTROL RESPONSE CHARACTERISTICS

RESPONSE/POUND (SENS) AND TIME CONSTANT (TC)

		ANGULAR RESPONSE						LINEAR RESPONSE			
		ACCEL (AC)		RATE (RA)		ATTITUDE (AT)		ACCEL (AC)		VELOCITY (LV)	
AXIS	CONTROLLER	INITIAL SENSITIVITY (deg/sec^2)	STEADY STATE SENSITIVITY (deg/sec^2)	SENSITIVITY (deg/sec)	TC (sec)	SENS (deg)	TC (sec)	INITIAL SENSI-TIVITY (deg/sec^2)	STEADY STATE SENSI-TIVITY (ft/sec^2)	SENSI-TIVITY (ft/sec)	TC (sec)
LONGITUDINAL	SIDE STICK	4.0	0.2	2.0	0.4	4.5	1.2	–	–	12.0	3.0
LATERAL	SIDE STICK	10.0	1.0	3.5	0.25	6.0	1.2	–	–	16.0	4.0
DIRECTIONAL	SIDE STICK	2.2	1.8	2.4	0.4	–	–	NA			
	PEDALS	0.6	0.44	1.4	0.60	–	–				
VERTICAL + UP – DOWN	SIDE STICK	NA						+5.0 –7.7	4.0 –6.2	+6.5 –9.0	0.60
	COLLECTIVE LEVER							±1.6	±1.3	±2.0	0.50

Table 5-1

roll acceleration response system was designed to provide a short-term rate response, with a long-term acceleration response to automatically eliminate steady control forces required for helicopter trim. This trim function was accomplished with a low-gain integral feed-forward path. Higher integral feed-forward gains were used in the yaw and vertical axes to obtain purer acceleration command responses as indicated in Table 5-1 by the ratio of steady-state to initial response.

To provide acceptable response characteristics for small precision control tasks and large maneuvers, as well as to minimize the effect of inadvertent inter-axis control inputs, non-linear control response shaping (Figure 5-4) was used. Each force command signal was passed through a shaping function that allowed variation of deadzone, initial sensitivity gradient, breakpoint, and high sensitivity gradient. Pitch, roll, and yaw control response shaping was symmetrical, whereas the vertical control shaping was asymmetric with a smaller breakout and higher response sensitivity in the down direction. Shaping functions employed during Phase 1 simulations are presented in Figure 5-4. These shaping functions were modified, however, during Phase 2 simulations at the NASA-Ames VMS Facility. Changes as described in Section 6.1 were required due to the improved motion cues provided by the large motion VMS.

5.1.2 Evaluation of Force/Deflection Characteristics

Four SSC configurations having unique force/deflection characteristics were evaluated during Phase 1. These four configurations were chosen to cover a wide range of pitch and roll force/deflection values (Figure 5-5) to bracket the AFFDL recommended region of References 13, 14, 15 and 16. Three 4-axis side-stick controllers (Figure 5-6) were used to provide the various force/deflection characteristics: (1) a stiff stick design (MSI-SS) manufactured by Measurement Systems, Inc., Norwalk, Conn., (2) the HLH prototype controller which provided a medium- and large-deflection configuration, and (3) a small-deflection controller (MSI-SD1) built specifically for the ACC/AFCS study.

Data which summarize the effect of side-stick controller force/deflection characteristics on pilot Cooper-Harper Rating (Reference 17) are presented in Figure 5-7. These data points represent three VMC tasks and two SCAS command systems; only the best rating achieved for each configuration is shown. The small-deflection and medium-deflection controllers achieved the best overall ratings.

Commentary from three pilots who compared the stiff-stick and small-deflection controllers was very consistent. All agreed that task performance improved substantially with the introduction of deflection. Typical comments were as follows:

FORCE CONTROL RESPONSE SHAPING

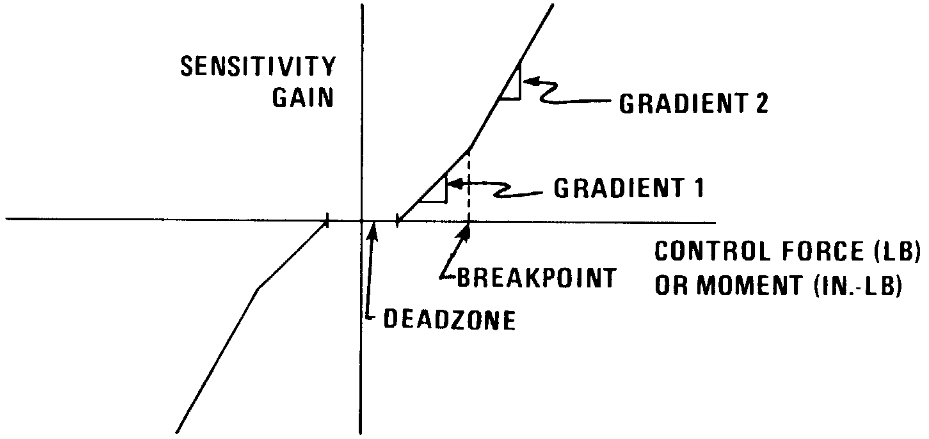
SENSITIVITY
GAIN
GRADIENT 2
GRADIENT 1
CONTROL FORCE (LB)
OR MOMENT (IN.-LB)
BREAKPOINT
DEADZONE

CONTROLLER CONFIGURATION	CONTROL AXIS	RESPONSE SHAPING PARAMETER			
		DEADZONE	1ST GRADIENT	BREAKPOINT	2ND GRADIENT
4-AXIS	LONGITUDINAL	± 0.5 LB	1.0	± 2.5 LB	1.5
	LATERAL	± 0.25 LB	1.0	± 4.25 LB	2.0
	DIRECTIONAL	± 0.4 IN.-LB	1.0	± 2.4 IN.-LB	2.0
	VERTICAL	+1.25 −0.625	1.0	+4.25 LB −3.625 LB	1.5
COLLECTIVE LEVER	VERTICAL	± 1.0 LB	1.0	± 4.0 LB	2.0
PEDALS	DIRECTIONAL	± 6.0 LB	1.0	± 12.0 LB	2.0

Figure 5-4

ORIGINAL PAGE IS
OF POOR QUALITY

ACC/AFCS CANDIDATE SSC CONTROLLERS FORCE/DEFLECTION CHARACTERISTICS

LONGITUDINAL AXIS

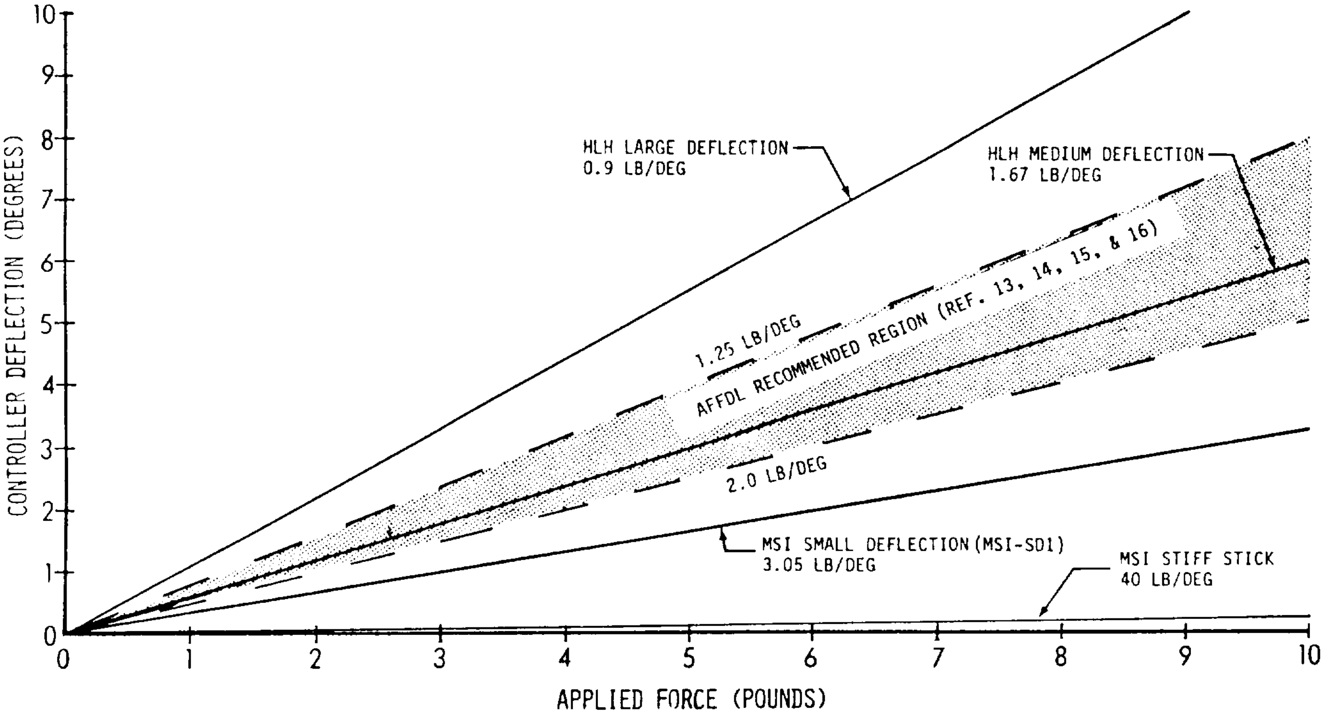

LATERAL AXIS

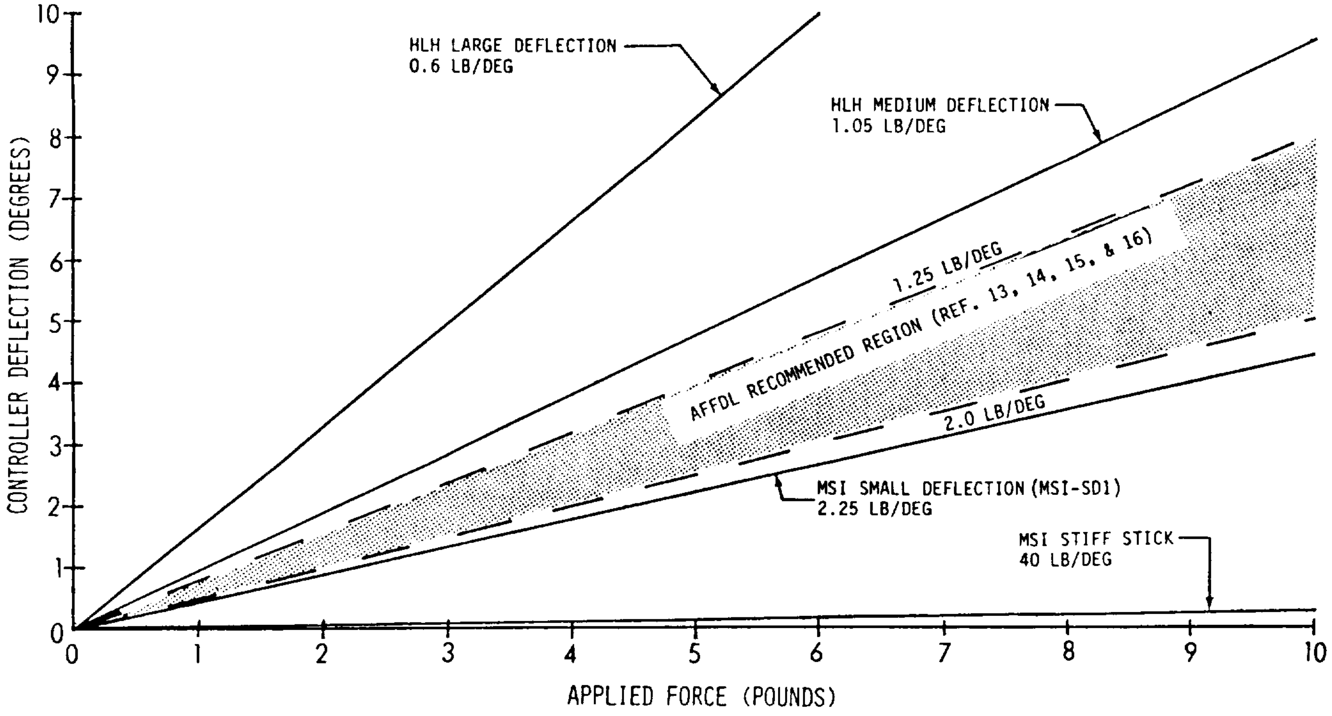

Figure 5-5

PHASE 1 4-AXIS SIDE-STICK CONTROLLERS

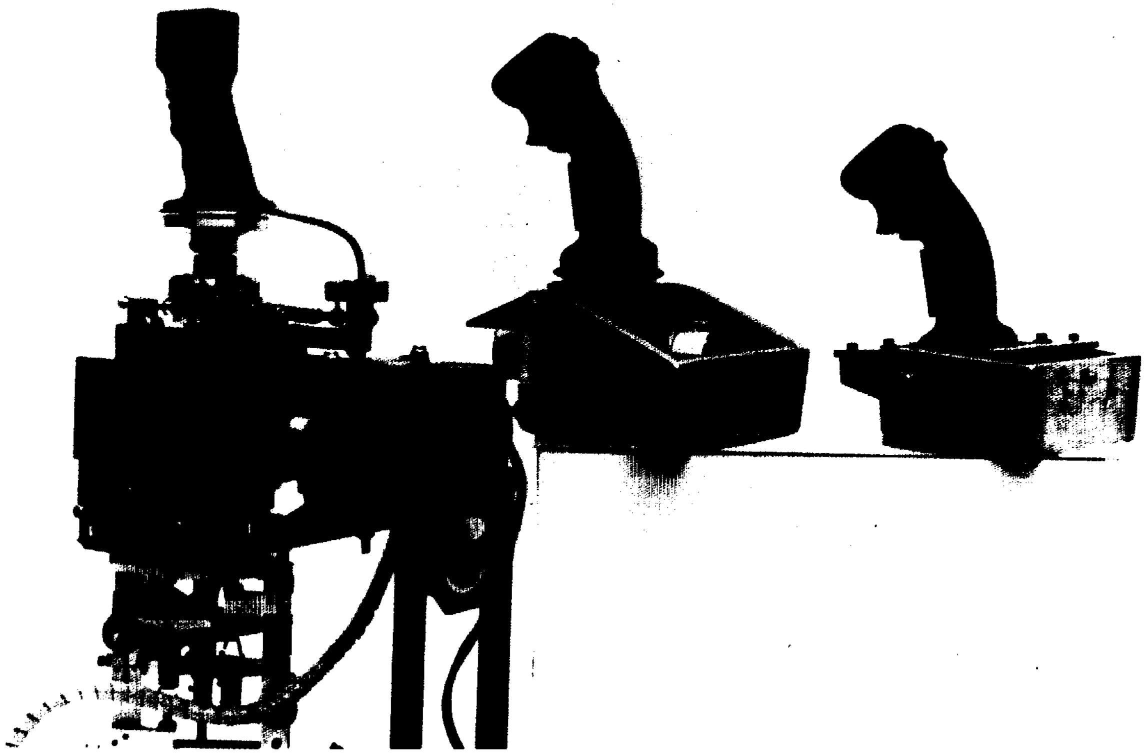
VARIABLE FORCE/
DISPLACEMENT
CONTROLLER
(HLH PROTOTYPE)
SMALL-DEFLECTION
MSI-SD1
STIFF-STICK
MSI-SS

Figure 5-6

ORIGINAL PAGE IS
OF POOR QUALITY

EFFECT OF SIDE-STICK CONTROLLER DEFLECTION/FORCE GRADIENT ON PILOT RATINGS

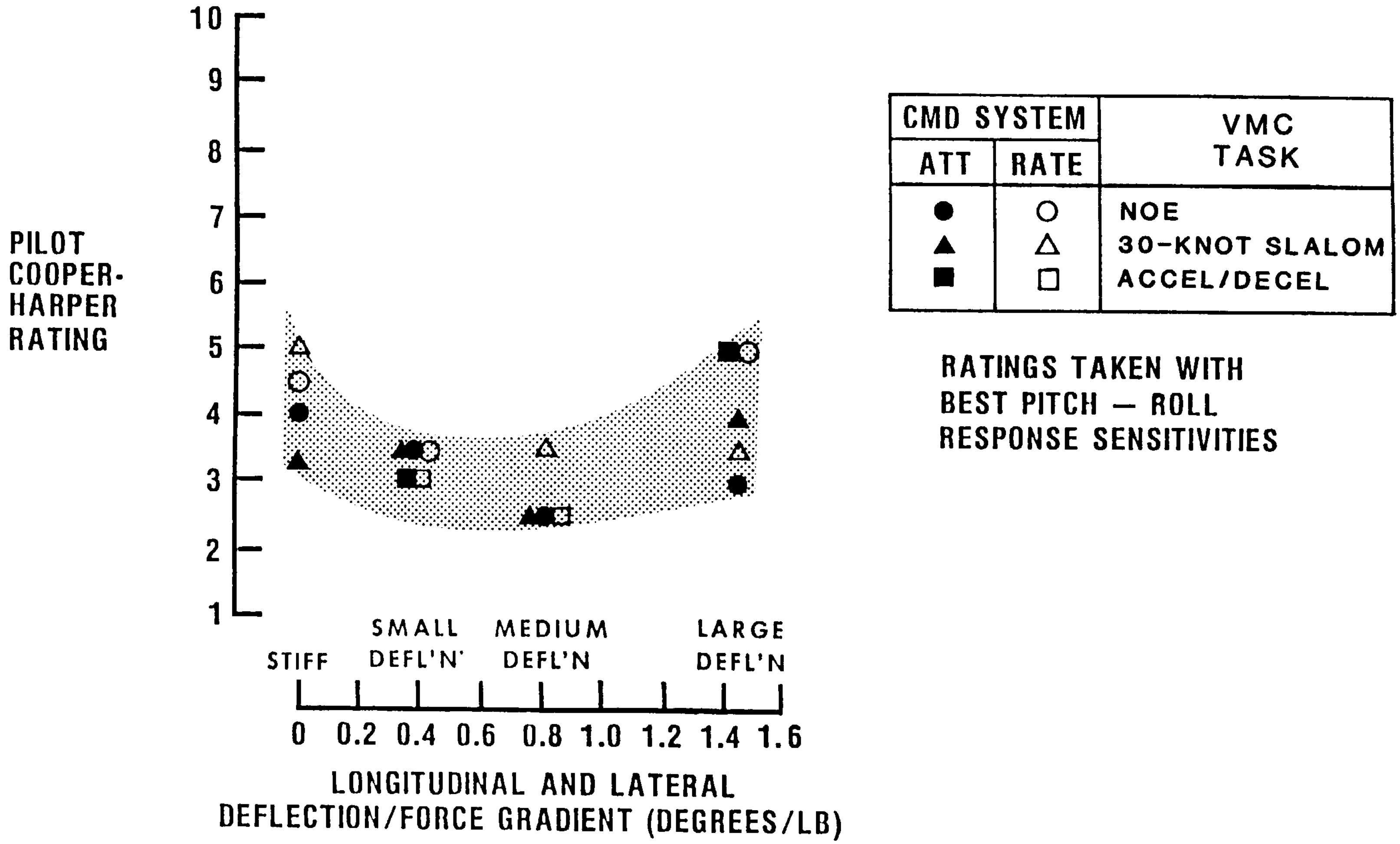

RATINGS TAKEN WITH
BEST PITCH — ROLL
RESPONSE SENSITIVITIES

Figure 5-7

Stiff Controller:

- "Defining best control sensitivities was more difficult and more critical with a stiff controller than deflection controller."
- "Inter-axis force harmony/sensitivities appeared to be more critical, especially during larger amplitude maneuvering."
- "Tendency to over-control, particularly during high frequency manipulative control tasks."
- "Tendency to release forces abruptly and create inadvertent sharp acceleration response."

Small-deflection Controller:

- "This controller has a softer feel of actuation than the stiff controller, and control inputs seem to be smoother in application."
- "Very noticeable improvement over stiff-stick using the same sensitivities. Ability to shape control commands during large amplitude maneuvers and control reversals was a major improvement."
- "This controller gave an immediate and very obvious improvement in handling qualities. Subjectively, I felt much more 'in the loop'. While tendencies to cross couple remained (compared to stiff controller), they were far depressed below the primary control task and were insignificant. Control inputs seemed much more natural and, although the response seemed to be more sensitive, this effect was quite tolerable."

Acceptance of the medium-deflection controller was mixed. One pilot gave the controller degraded ratings because height control was difficult due to a high force breakout in the vertical axis. A second pilot gave the same controller improved ratings compared to the small-deflection controller because he felt more in control during large maneuvers.

Two pilots evaluated the large-deflection controller and gave degraded ratings compared to the small-deflection controller. Comments indicated a more sluggish pitch control response and less precise control of attitude for high-frequency inputs.

Based on these results, a second 4-axis small-deflection controller design, MSI-SD2, having a 50% higher deflection/force gradient, was selected for evaluation of the primary and secondary controller/SCAS configuration matrices. Table 3-1 in Section 3.1 compares the force/deflection characteristics for the four initial candidate controllers and the characteristics for the modified small-deflection controller denoted as MSI-SD2.

5.2 EVALUATION OF CONTROLLER/SCAS CONFIGURATION MATRIX

Phases 1B and 1C used the command response sensitivities, non-linear response shaping functions, and small-deflection 4-axis controller (MSI-SD2) developed from the Phase 1A simulation. The purpose of Phase 1B and 1C was to evaluate the large matrix of controller configuration and generic SCAS combinations for a variety of attack helicopter tasks. Variation of the sub-level design characteristics of each matrix element was not performed during this phase of testing. For example, controller force/deflection characteristics, response/force sensitivities, etc. were held constant throughout Phase 1B and 1C. Average pilot rating data contained in the primary and secondary SCAS/controller matrices are presented in the following discussion of results. Data are plotted in a manner to clearly illustrate the interactive effects of task, controller, and SCAS configurations. These effects are more easily seen by this method rather than presentation of the actual matrices included in Appendix C.

5.2.1 4-Axis Controller Evaluation

The modified 4-axis controller (MSI-SD2) was fabricated from the MSI-SD1 unit with a change made only to the internal spring mechanism of the device. Therefore, a direct back-to-back comparison of the two MSI small-deflection controller designs could not be obtained after the modification. In addition, since a large number of 4-axis controller configurations were evaluated during Phase 1A, limited test time for each controller resulted in a smaller number of data points than desired for the 4-axis stiff-stick. It was decided that further evaluation of the 4-axis stiff-stick controller relative to the modified small-deflection controller (MSI-SD2) during initial Phase 1B simulation was necessary. A summary of this comparison is shown in Figure 5-8.

All pilot rating data were averaged for the three low speed maneuvering tasks - the NOE, 30-Knot Slalom, and Acceleration/ Deceleration. Average pilot ratings indicate that there was a small advantage with the small-deflection controller for the higher levels of command/stabilization, ie. an AT/AT and AT/LV system. However, pilot ratings were mixed and more widely separated for the lower levels of command/stabilization, resulting in no clear advantage for either controller. Having experience with the side-stick configuration from Phase 1A simulation, as well as a familiar set of force response characteristics for the sequence of comparison test runs may have caused the separation of data to be smaller than expected.

CONTROLLER COMPARISON
STIFF STICK vs SMALL DEFLECTION

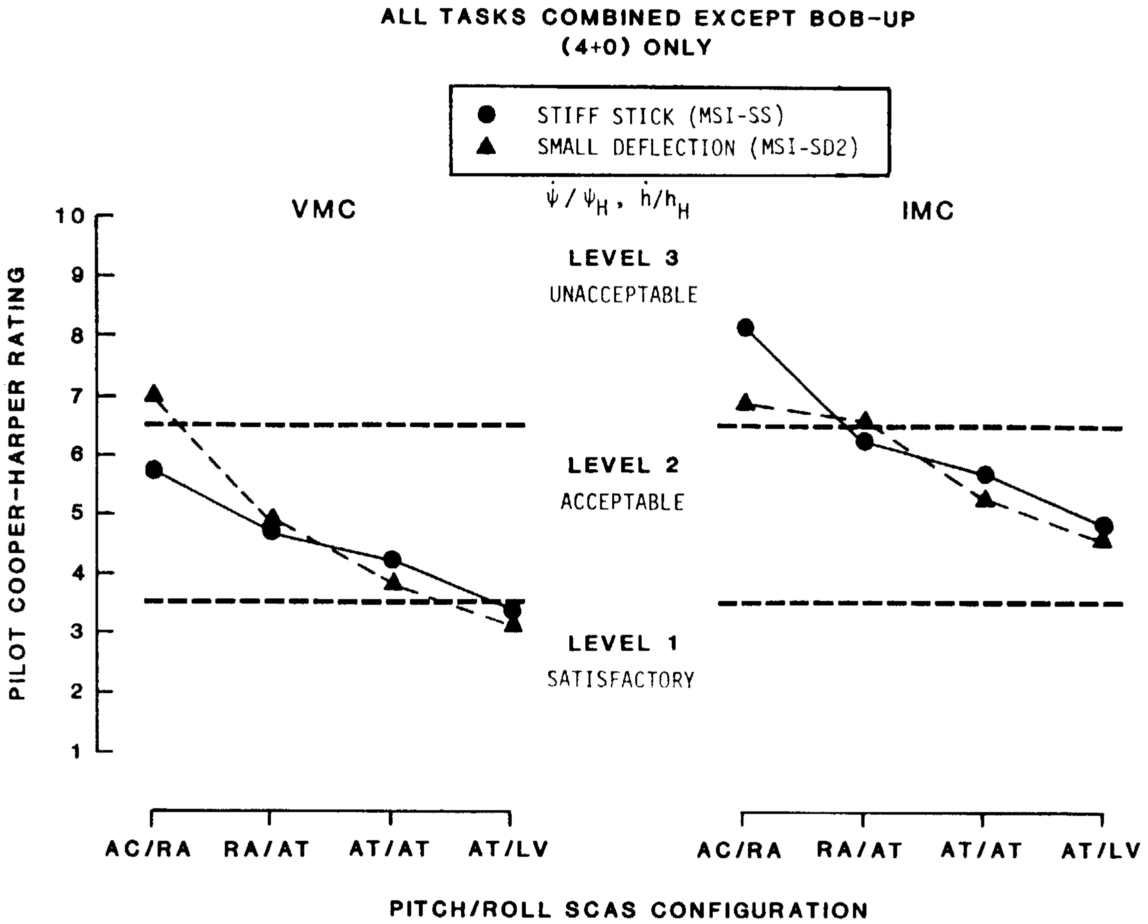

Figure 5-8

Based on pilot comments, preference for the small-deflection controller rather than the stiff-stick was unanimous. They frequently cited the tendency to over-control and cross-couple control inputs with the stiff-stick. An advantage of the small-deflection controller was felt to be an ability to shape pitch and roll control commands which could not be done with the stiff-stick. Even though pilot ratings gave no large advantage to the small-deflection controller, the pilot comments indicated that going from the stiff-stick to the small-deflection design provided a noticeable improvement in handling qualities. The primary pilot complaint about the MSI-SD2 design was the lack of force harmony between all axes, ie. the pitch and roll axes had noticeable deflection and a relatively "soft" force/deflection gradient compared to the "stiff" yaw and collective axes. Based on these results, the small-deflection controller (MSI-SD2) was used for the remainder of testing to compare effects of various controller configurations.

5.2.2 Controller Configuration/Display Effects

A comparison of pilot ratings obtained for various controller configurations for the NOE Task are presented in Figure 5-9. This task was felt to be the most difficult and demanding task of the four low-speed maneuvering tasks evaluated during Phase 1. Primary factors causing higher workload and degraded flight path performance for the NOE Task under IMC were: (1) inability to precisely control height, (2) tendency to couple side-stick vertical control inputs into pitch and/or roll, (3) difficult coordination of lateral-directional control in turns, and (4) tendency to over control roll in high workload situations.

The most serious deficiency reported was poor height and vertical speed resolution due to the restricted field-of-view, lack of peripheral cues, and/or lack of surface texture/picture detail. Weak motion cues as well as a lack of rotor/drive system noise may have contributed to a tendency for overcontrol of the vertical axis. The pilot had to rely almost totally on display information for vertical speed with no acceleration lead cues.

The (4+0) controller configuration received poorer ratings for the NOE course where collective control inputs were required to clear the obstacles. Inadvertent inputs to pitch and roll increased the workload required to maintain airspeed and flight path control. Overcontrol in roll was occasionally experienced when corrective action was required to compensate for an inadvertent control input.

Pilot ratings for the Bob-up Task are presented in Figure 5-10. The IMC Bob-up Task was essentially an instrument reference task with necessary information such as velocity vector, X-Y position, acceleration cue, and altitude provided by the

PILOT RATINGS - NOE TASK

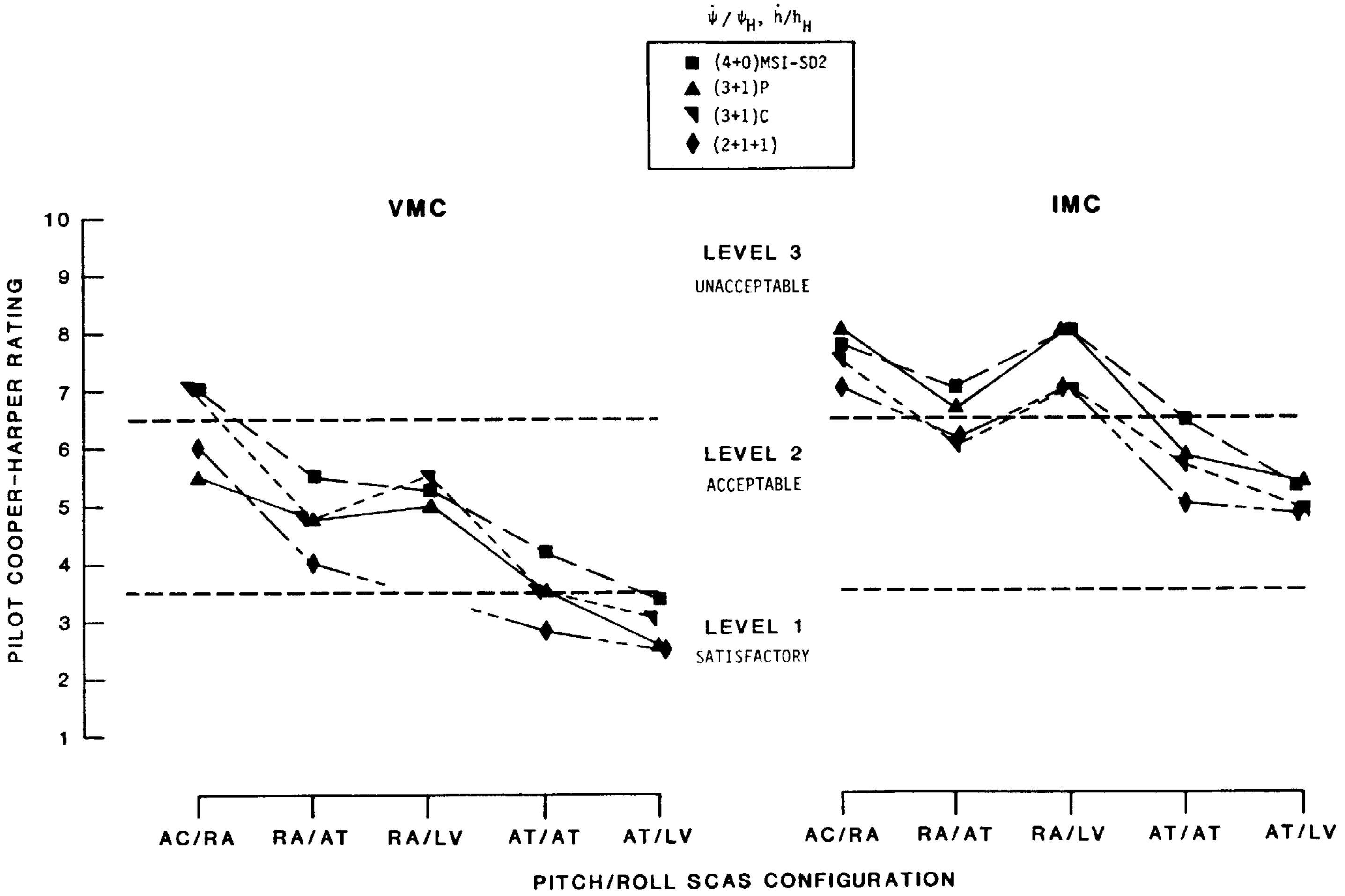

Figure 5-9

PILOT RATINGS - BOB-UP TASK

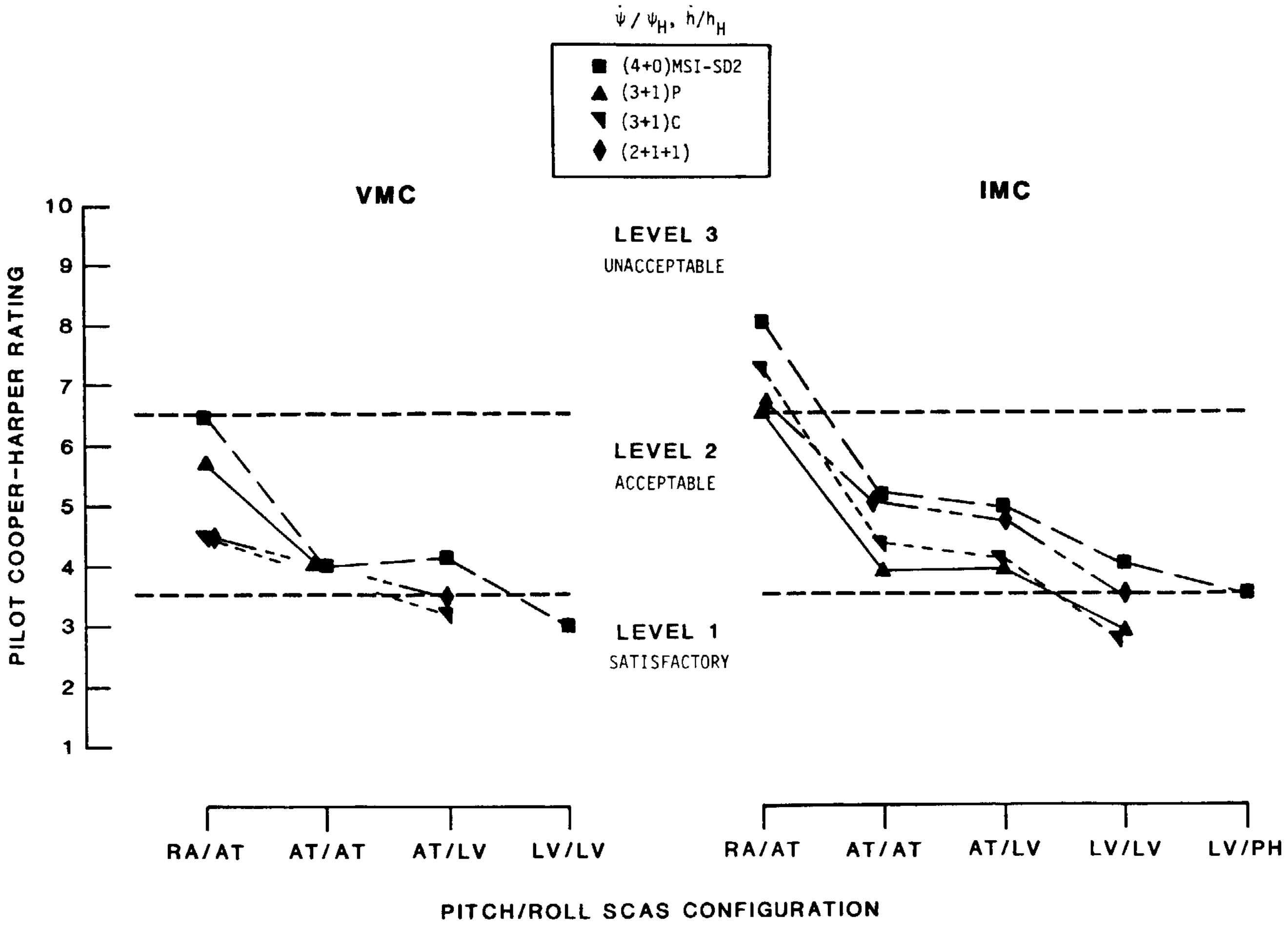

Figure 5-10

display symbology. Marginal Level 2 ratings were obtained with an AT/LV system. Level 1 ratings were achievable with a velocity command system having either velocity or position stabilization.

In contrast to the ratings assigned for the other tasks under VMC, ratings for the Bob-up Task were more degraded. VMC performance was degraded compared to IMC because of the direct feedback given to the pilot by the IHADSS display symbology while performing the IMC task. In fact, VMC performance as measured by X-Y position deviation during the Bob-up Task was significantly degraded over the IMC task.

Because of inadvertent cross-coupled inputs, the 4-axis side-stick controller received degraded pilot ratings for the Bob-up Task. Separation of the controllers, particularly vertical, improved pilot ratings significantly. The best ratings were achieved using a (3+1) Collective configuration combined with a velocity stabilized system.

The IMC Acceleration/Deceleration Task primarily a single-axis longitudinal maneuver with Altitude Hold and Heading Hold selected, was the easiest of the four IMC tasks. As shown in Figure 5-11, Level 2 ratings of approximately 4.0 were obtained with all controllers except for the (3+1) Pedal configuration. Workload and task performance were influenced primarily by the following factors: (1) tendency to couple pitch control into side-stick vertical control, (2) vertical control coupling into lateral-directional requiring pilot compensation, (3) pilot disorientation during a nose-up maneuver; confusing head motion with aircraft attitude changes, and (4) poor resolution of longitudinal/lateral positioning during deceleration to hover. Precise control of aircraft position during the deceleration to hover was difficult due to poor resolution of longitudinal speeds and rate of closure, thought to be caused by the limited field-of-view and limited peripheral cues. Small lateral speeds were difficult to discern from small yaw rates especially at low speeds.

Performance of the Slalom Task under IMC with Altitude and Heading Hold selected was primarily a two-axis lateral-directional control task. Pilot ratings (Figure 5-12) were degraded by approximately one point compared to the Acceleration/Deceleration Task. Task performance was judged principally on the ability to execute coordinated turns and achieve a desired curvilinear path around obstacles at constant speed. Primary factors which increased workload and degraded pilot ratings were: (1) tendency to couple side-stick yaw control inputs into roll and/or pitch, (2) difficult turn coordination due to lack of peripheral cues with the IMC visual display, and (3) tendency to become disoriented with IHADSS when head movements were made to locate desired flight path projection. It was difficult to distinguish the effects head response from aircraft response.

PILOT RATINGS - ACCELERATION/DECELERATION TASK

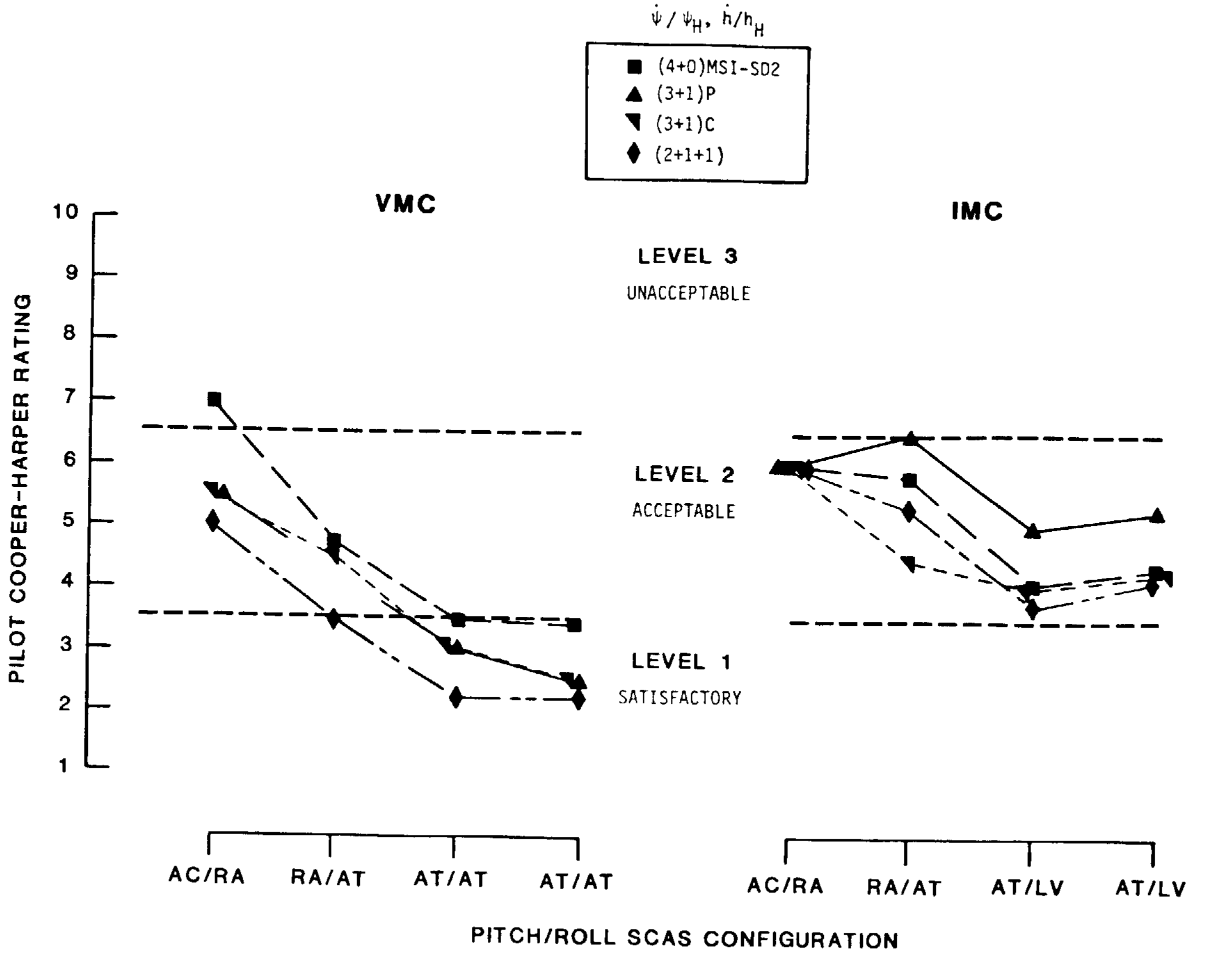

Figure 5-11

PILOT RATINGS - 30-KNOT SLALOM TASK

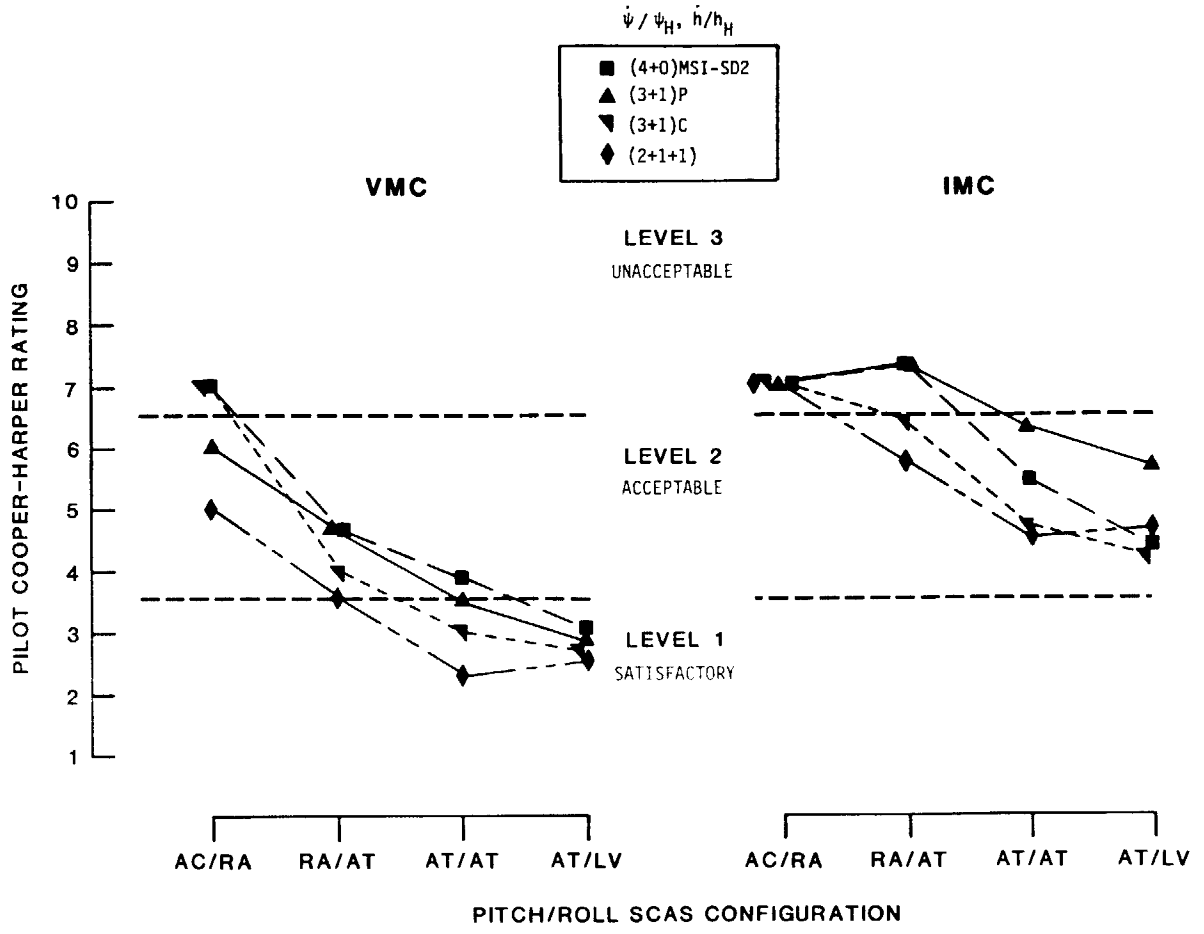

Figure 5-12

For the Acceleration/Deceleration and Slalom Tasks, the (3+1) Pedal configuration received more degraded pilot ratings than all other configurations. If large errors were allowed to build up, precise corrective control inputs with the pedals were difficult to achieve, and overcontrol of yaw often resulted. Precision yaw control on the side-stick provided improved lateral-directional control for IMC.

5.2.3 SCAS Effects

Primary SCAS - Longitudinal/Lateral

For the most difficult IMC tasks (NOE and Slalom), the acceleration command/rate stabilization system (AC/RA) exhibited Level 3 handling qualities (Figures 5-9 and 5-12). With the addition of attitude stabilization, the RA/AT system received marginal Level 2 ratings for IMC with high workload required to achieve adequate performance. It was extremely difficult to maintain precise flight control parameters (airspeed, lateral ground track, sideslip, etc.). Continuous pulse-type control inputs were required for best performance. When velocity stabilization was combined with a rate command system (RA/LV), for all low-speed maneuvering tasks there was a significant degradation in pilot ratings, particularly noticed for the NOE Task (Figure 5-9). Pilot workload and compensation to achieve lateral-directional coordination were noticeably higher, possibly indicating an inherent conceptual design problem with this combination (i.e., having the stabilization type more than one integration away from the command type).

A large improvement in IMC ratings for all tasks was obtained with an attitude command system. With the same level of attitude stabilization, an attitude command system (AT/AT) improved pilot ratings an average of one rating point when compared to the rate command system (RA/AT). A similar improvement occurred in the VMC ratings. Pilot comments indicated that the attitude command system exhibited a noticeably stronger feel of "apparent" stability. The pilots felt more continuous in the control loop with a strong force/attitude (force/linear acceleration) relation. By having more precise control of attitude, maintenance of airspeed and ground track and execution of coordinated turns were performed with lower workload. There was also less tendency to overcontrol with an attitude command system particularly for large maneuvers and/or control reversals.

When combined with an attitude command system, velocity stabilization improved pilot ratings for maneuvering tasks by about half a rating point for both IMC and VMC. The ease of maintaining airspeed and effecting turn coordination during the Slalom and NOE Tasks, and the ease of varying airspeed and maintaining lateral ground track during the Acceleration/Deceleration and NOE Tasks was the major benefit noticed with the attitude command/velocity stabilization system.

The influence of SCAS configuration on pilot ratings for the Bob-up Task is shown in Figure 5-10. The attitude command system yielded pilot ratings in the low Level 2 region (CHPR ≅ 4.5). Use of a velocity command/velocity stabilization system reduced pilot workload, improved task performance, and achieved Level 1 pilot ratings for the Bob-up Task with all controllers except the 4-axis small-deflection configuration.

Velocity command response characteristics were reported to be more jerky than the attitude response system, however, small position changes could be made easily. The addition of position stabilization, evaluated only with 4-axis controllers, made the Bob-up Task a series of single-axis control maneuvers. Level 1 ratings and excellent position hold were achieved.

As previously stated, attitude command systems were preferred over rate command systems for all low speed tasks. Time histories of two data runs with different CMD/STAB systems are presented in Figures 5-13 and 5-14 for the Bob-up Task. Both data runs were performed under VMC using the MSI-SD2 SSC in the 4-axis configuration. Pilot ratings were 3.5 for the AT/LV system and 6 for the RA/LV system. Improved control of position, altitude, and heading was achieved with the AT/LV system. Pilot control inputs with this system were less active and smaller in magnitude than with the RA/LV system.

Figure 5-15 presents an example of Bob-up Task performance achieved as a function of SCAS configuration. Deviations in longitudinal and lateral position from the initial/desired hover location are used to calculate a mean radius, i.e. a circle containing one-half the total number of data points. Data are presented for Pilot A and five controller configurations as a function of pitch/roll SCAS configuration. Compared to the rate command system, a large improvement in performance and pilot rating can be seen for an attitude command system. Best performance was achieved with a velocity command system (mean radius ≦ 12 feet) for all controller configurations evaluated by pilot A. Data for the 4-axis controllers show degraded performance and pilot ratings, particularly for the attitude command system.

Secondary SCAS/Controller - Directional/Vertical

Directional and vertical SCAS configurations were varied for the RA/AT, AT/AT, and AT/LV systems of the primary SCAS matrix. All controller configurations were evaluated. In general, the yaw rate command/heading hold system provided the best pilot ratings with the pitch/roll attitude command systems for all controller configurations and tasks. Turn coordination and lateral ground track could be controlled easily, particularly for VMC. A yaw acceleration command system made it more difficult to execute precise heading changes or to establish a zero yaw rate at a desired heading. Low speed turn coordination and lateral ground track were also degraded due to this

TIME HISTORY OF BOB-UP TASK
RA/LV

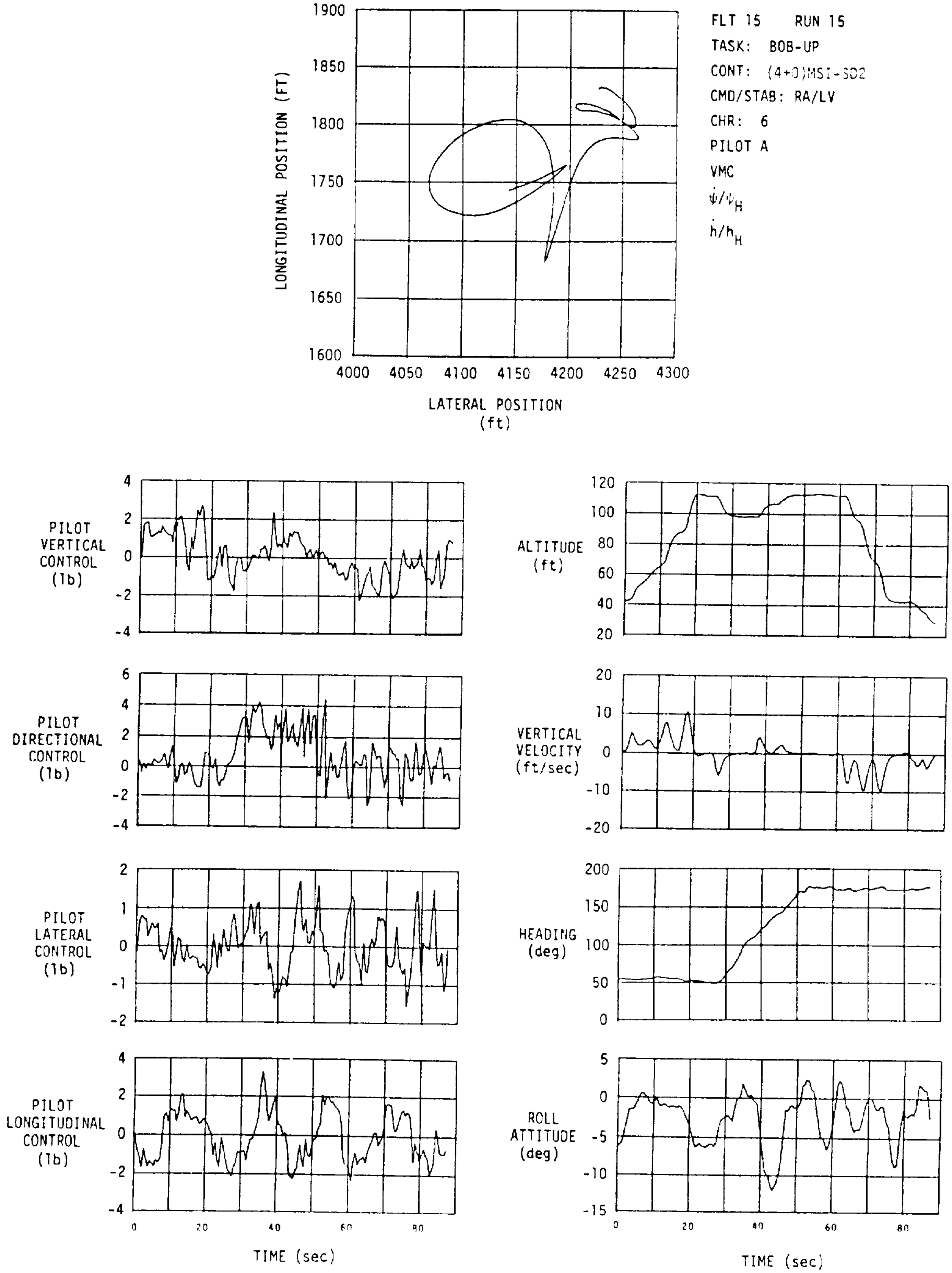

Figure 5-13

TIME HISTORY OF BOB-UP TASK
AT/LV

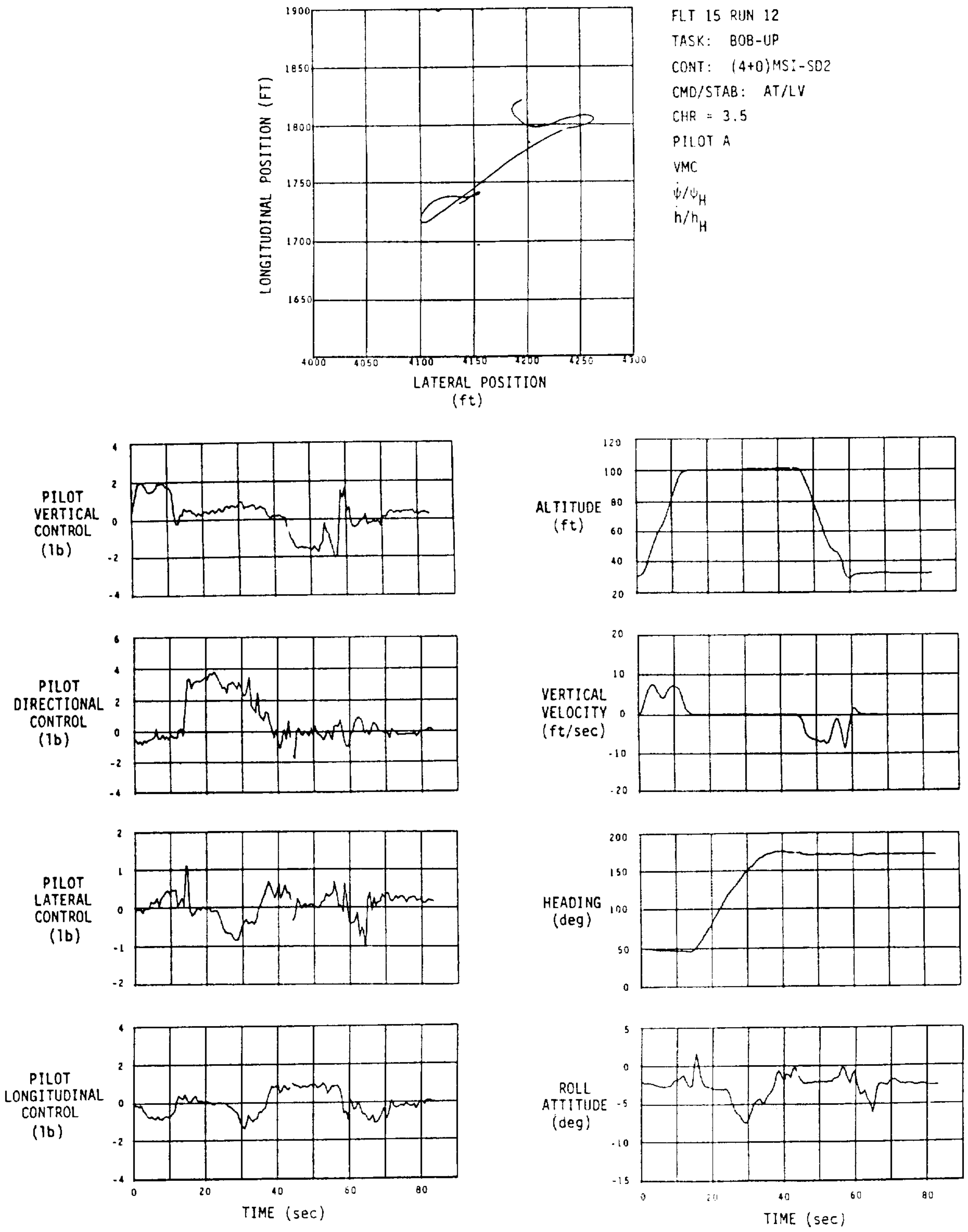

Figure 5-14

BOB-UP TASK PERFORMANCE

- ALTITUDE HOLD ON
- HEADING HOLD ON
- IMC
- ALL DATA AVERAGED
- PILOT A ONLY

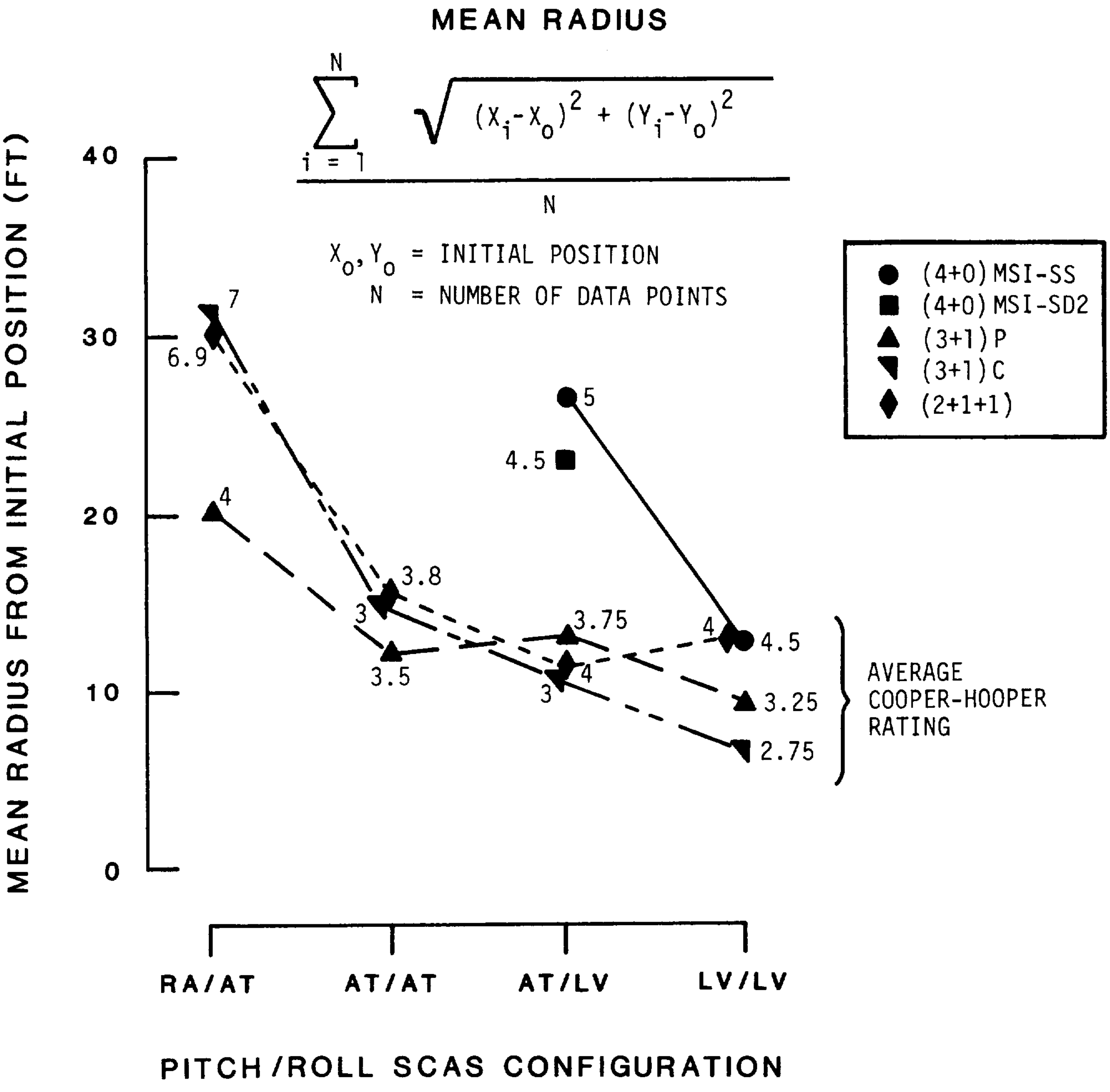

MEAN RADIUS

$$\frac{\sum_{i=1}^{N} \sqrt{(X_i - X_o)^2 + (Y_i - Y_o)^2}}{N}$$

X_o, Y_o = INITIAL POSITION

N = NUMBER OF DATA POINTS

Figure 5-15

inability to modulate or vary yaw rate precisely, particularly with the pedals.

An important interactive directional SCAS/controller effect is shown in Figure 5-16 where yaw control on the 4-axis side-stick is compared to yaw control with the (2+1+1) configuration for the Slalom Task. Yaw acceleration command for the 4-axis or the (2+1+1) configuration degraded pilot ratings with all pitch/roll SCAS configurations when compared to the yaw rate command system. When yaw acceleration command was implemented on the side-stick, either a (3+1) Collective or (4+0) configuration, pilot ratings were degraded with the pitch/roll attitude command system, but improved with the rate command system. For the low speed coordinated turn maneuver, yaw acceleration command improved control capability by eliminating the requirement for steady forces to control yaw rate. It is difficult for the pilot to modulate forces in one or two axes (pitch/roll rate control) while holding a steady force in another axis (yaw rate command for turn coordination). The yaw acceleration command system provided improved control harmony for lateral-directional maneuvering when implemented with the pitch and roll rate command systems.

Also shown on Figure 5-16, the yaw acceleration command/yaw rate stabilization system generally received better pilot ratings than the yaw acceleration command/heading hold system. As previously noted for the primary SCAS RA/LV system, a degradation of task performance was observed if the stabilization level was more than one integration away from the command type.

The vertical rate command/altitude hold system achieved the best pilot ratings for all pitch/roll SCAS systems and controller configurations. Vertical rate command provided good control of vertical speed and precise control of altitude, particularly for VMC. Acceleration command in the vertical control axis degraded control accuracy and necessitated pulse control inputs to achieve the best flight path performance.

Figure 5-17 compares vertical control on the side-stick ((4+0) configuration) and conventional collective lever ((3+1) Collective or (2+1+1)). Vertical acceleration command on the collective lever degraded the IMC handling qualities to Level 3. As with yaw control on the side-stick, vertical acceleration command on the side-stick offers the benefit of eliminating the need to hold steady vertical control forces to achieve a steady vertical rate. However, based upon the results, the benefit of altitude hold and vertical rate command apparently offset the requirement to hold vertical control forces. These particular results may be biased by the lack of strong vertical motion and rotor/drive system noise cues in the simulator.

EFFECT OF YAW SCAS VARIATIONS ON PILOT RATINGS

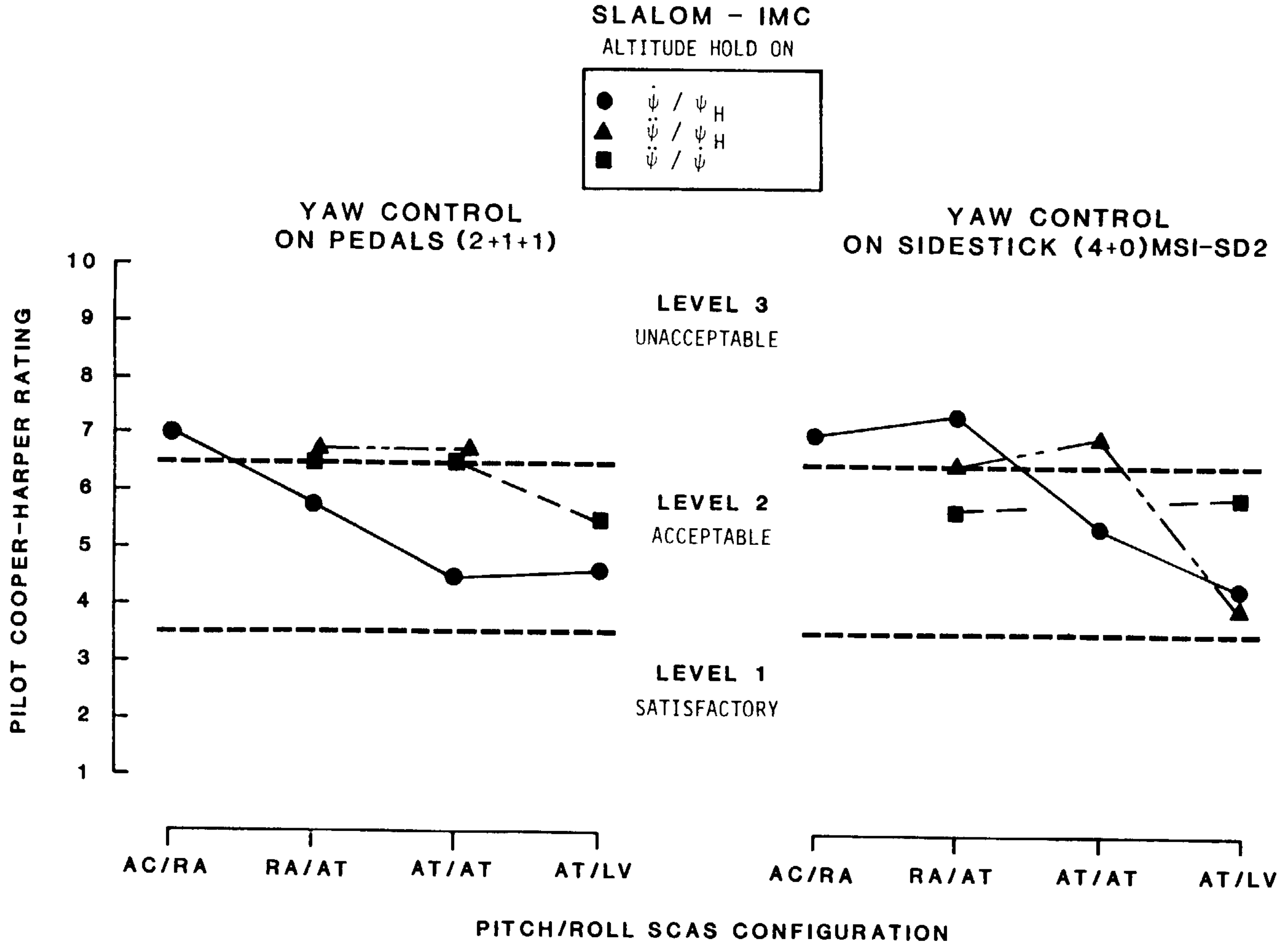

Figure 5-16

EFFECT OF VERTICAL SCAS VARIATIONS ON PILOT RATINGS

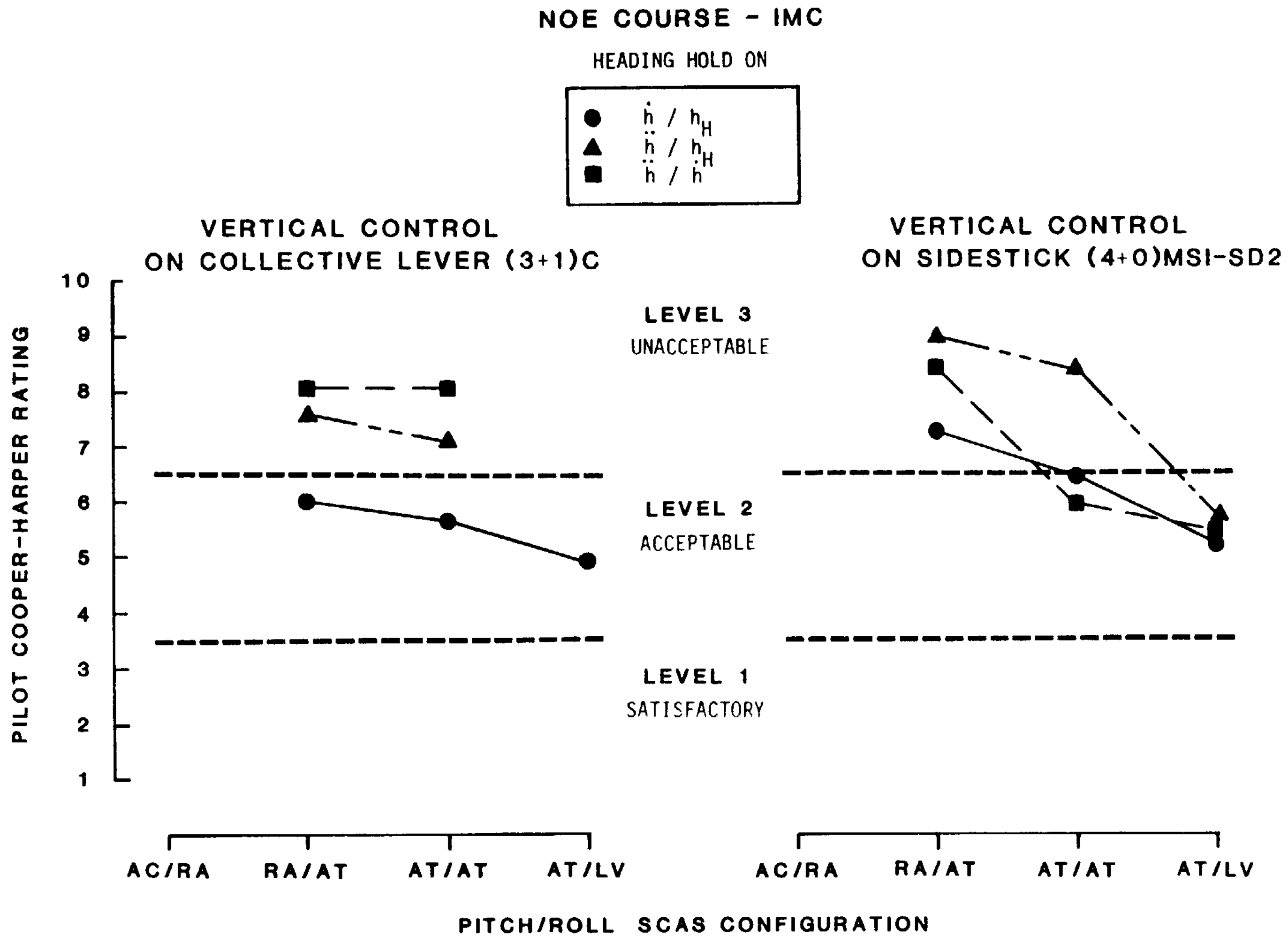

Figure 5-17

6.0 PHASE 2 SIMULATION RESULTS

The primary objectives of the simulation experiments at the NASA-Ames facility were: (1) to investigate forward flight control laws, including blending of control modes between low-speed and forward flight, (2) to continue the evaluation of side-stick controller configurations, including a new 4-axis controller with limited deflection in all axes and a left-hand side-stick for vertical control, and (3) to assess the effects of a more valid representation of aircraft motion.

Two phases of piloted simulation activity were performed during Phase 2. Phase 2A utilized 65 pilot flight hours and evaluated handling qualities under VMC using the four-window CGI display. Low-speed, transition, and forward flight tasks representing elements of the entire scout/attack-helicopter mission were emphasized during Phase 2A. Phase 2B evaluated the same mission tasks under IMC with the IHADSS. A total of 55 pilot flight hours (46 IMC hours and 9 VMC hours) were utilized during Phase 2B.

AFCS Modifications for Phase 2 Simulation

The AFCS model implemented for Phase 1 simulations at Boeing Vertol was modified for Phase 2 to include additional feedback and feed-forward paths required for forward flight control laws. Airspeed and lateral acceleration stabilization signals and cross-axis control paths required for decoupling and automatic turn coordination were added to the original Phase 1 AFCS, which had been designed primarily for hover and low speed flight.

Transient-free switching between complementary airspeed stabilization and ground speed stabilization was provided in the longitudinal AFCS. In order to switch between a roll attitude command/lateral velocity stabilization system (AT/LV) at low speed and a roll rate command/altitude hold system (RA/AT) for high speed maneuvering flight, a selectable hybrid lateral AFCS configuration was provided (AT/LV-RA/AT). A cross-axis command path from the lateral to directional AFCS was implemented for automatic turn coordination where a commanded bank angle signal was used to calculate a turn-rate command as a function of airspeed. The vertical AFCS was also modified to include gain scheduling as a function of airspeed for the altitude and altitude rate feedback paths. High gains were provided to achieve tight altitude hold for precision hover tasks and lower stabilization gains were used during high speed flight. Hybrid altitude and altitude rate feedback signals were also mechanized in the vertical axis using a vertical acceleration sensor.

IHADSS Modifications

Several modifications were made to the IHADSS symbology used in the Phase 1 IMC simulation study. These changes, incorporated during preliminary Phase 2 IHADSS checkout testing, were based on pilot commentary received during the Phase 1 simulation program at Boeing Vertol.

Figure 6-1 compares the formats used during Phase 1 and Phase 2B. As shown in this example, the changes include:

1) Additional pitch-attitude symbols to provide a more compelling and accurate display of pitch and roll attitude.

2) The movement of the heading symbols to the lower center of the display to eliminate the eye muscle strain caused by its usual location well above the display center; the heading scale was also truncated to declutter the display.

3) The replacement of the diamond-shaped aircraft nose symbol which, during Phase 1, was found confusing and awkward by test pilots. The cockpit reference display, which provided information concerning aircraft orientation relative to head azimuth and elevation, was designed to alleviate the disorientation problems of the diamond-shaped symbol by NASA-Ames engineers. As shown in Figure 6-1, the cockpit reference display consists of evenly spaced, converging lines all directed toward the nose of the aircraft.

The above changes, though not quantitatively evaluated, were felt by all subject pilots to improve the IHADSS symbology effectiveness.

Controller Development During Phase 2

Handling qualities problems with the stiff 4-axis controller were demonstrated during the Phase 1 simulation experiments. In addition, slightly improved handling qualities for specific tasks resulted from adding limited deflection to the longitudinal and lateral axes of the side-stick (MSI-SD2). Based on Phase 1 simulation results, Phase 2 experiments were directed toward investigating the possible benefit of improved vertical and directional axis control through a 4-axis controller with small-deflection in all axes (MSI-SD3). This new 4-axis controller, is shown in Figure 6-2 along with the stiff-stick and small-deflection controller (MSI-SD2). A new grip, similar to the grip used in the Reference 18 program, was also included with the new controller (MSI-SD3) to minimize the vertical-to-

ORIGINAL PAGE IS
OF POOR QUALITY

VARIATIONS IN IHADSS SYMBOLOGY

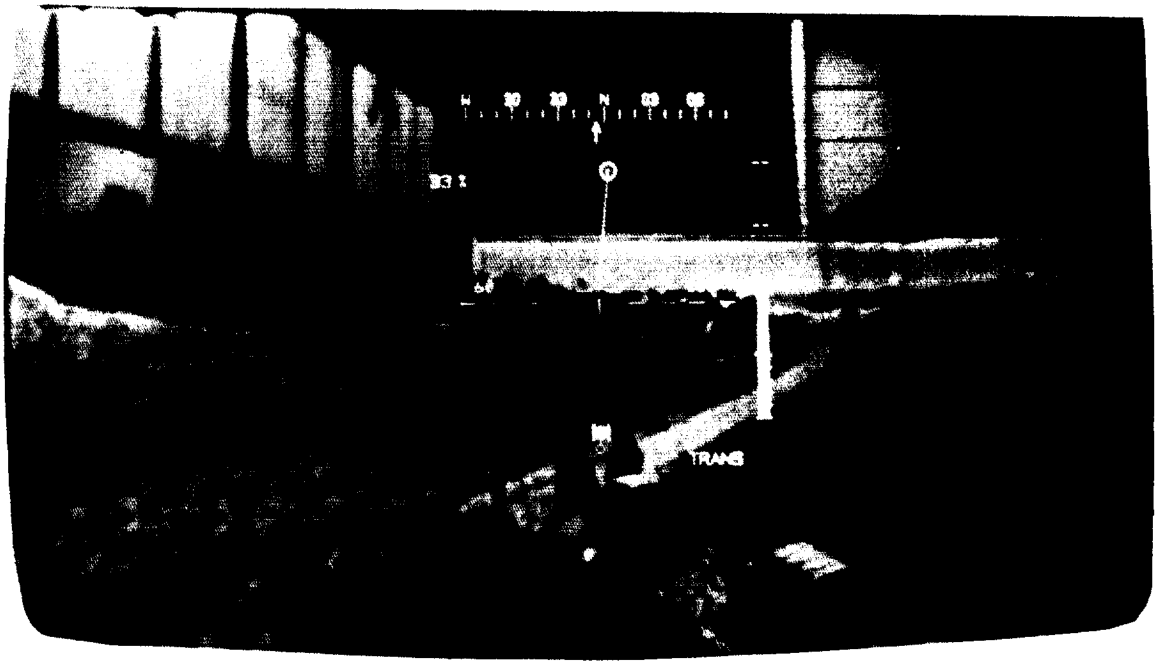

PHASE 1 SYMBOLOGY

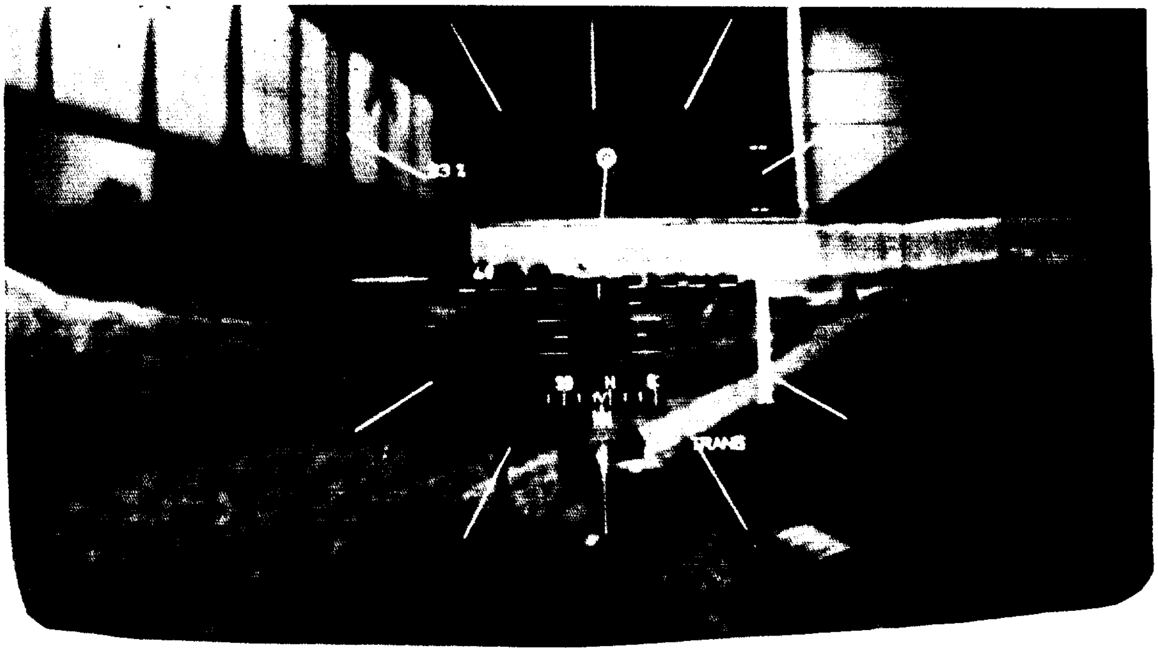

PHASE 2 SYMBOLOGY

Figure 6-1

PHASE 2 4-AXIS SIDE-STICK CONTROLLERS

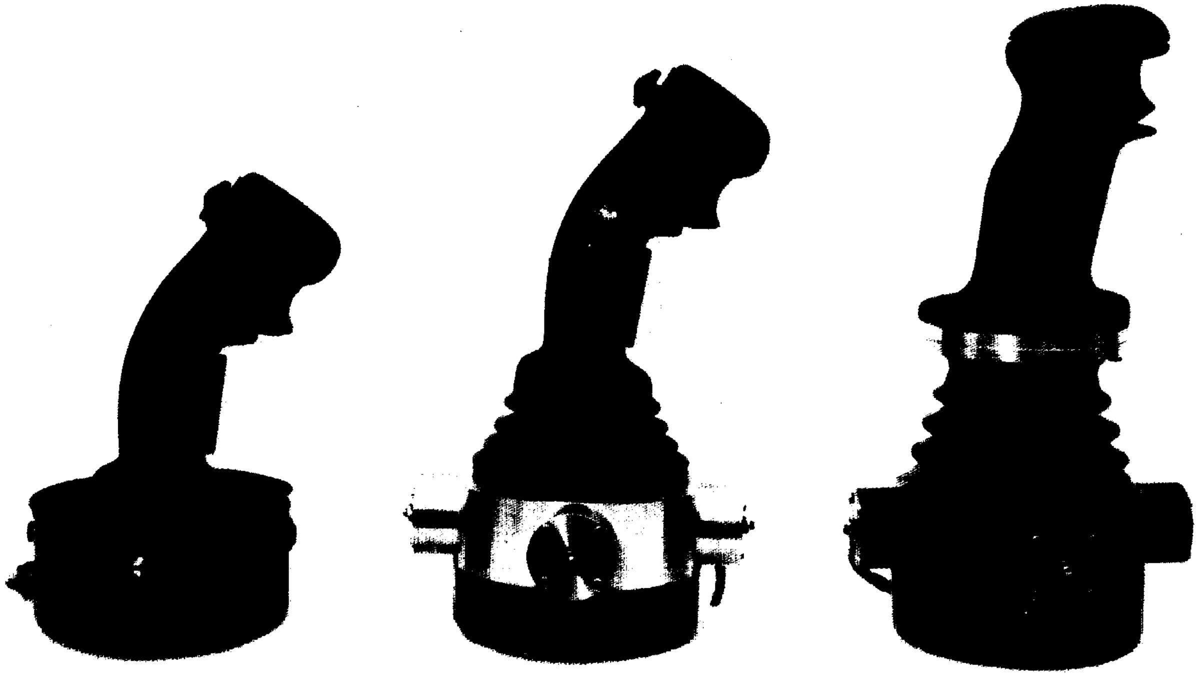

STIFF STICK
MSI-SS

SMALL-DEFLECTION
MSI-SD2

SMALL-DEFLECTION
ALL AXES
MSI-SD3

Figure 6-2

ORIGINAL PAGE IS
OF POOR QUALITY

C-2

longitudinal-and-lateral control coupling inherent with the original grip used for Phase 1 simulations.

In addition, continued simulation studies and design efforts during Phase 2 were aimed at improvement of the (3+1) Collective controller configuration using a left-hand side-stick vertical controller instead of a conventional collective lever implemented as a stiff-lever. The stiff-stick and small-deflection configurations (MSI-SS and MSI-SD2) were available for use as a single-axis left-hand vertical controller. Left-hand control of collective in the (3+1) Collective configuration was implemented through the longitudinal control axis of either controller.

Finally, a brassboard 4-axis controller (Figure 6-3) similar to the actual design to be flight tested on the ADOCS demonstrator aircraft was evaluated during Phase 2B simulation activity. The brassboard controller, manufactured by Lear Siegler, Inc., was designed to have force/deflection characteristics very close to the MSI-SD3 controller manufactured by Measurement Systems, Inc. (Table 3-1). An alternate grip design developed by Boeing Vertol is also shown mounted on the brassboard controller. This grip was not used during the Phase 2 simulations.

6.1 SIMULATOR EFFECTS

Comparison of Phase 2 pilot rating data with Phase 1 results was desired to understand the effects, if any, of the NASA-Ames VMS, which provides a higher fidelity motion cue environment. An assessment of the effects of large motion on pilot kinesthetic coupling with various side-stick controller configurations was particularly desired during Phase 2 simulation. As a result of the effects of large motion, it was necessary to modify control response shaping characteristics to achieve satisfactory pilot ratings for all tasks, particularly the Precision Hover Task.

6.1.1 Effect of Simulator Visual Display/Motion System

Initial Phase 2 data were obtained for the small-deflection controller (MSI-SD2) using Phase 1 response shaping functions. A comparison of these data with Phase 1 data is shown in Figure 6-4. Pilot ratings are similar for the multi-axis NOE maneuvering task when comparing two SCAS configurations -- a rate command/attitude stabilization (RA/AT) and an attitude command/velocity stabilization (AT/LV) system. Phase 2 ratings were degraded approximately 0.5 points with the attitude command system and pilot comments indicated a tendency for over-control. Improved pilot ratings and task performance compared to the Phase 1 data were achieved with the rate command system.

LSI BRASSBOARD CONTROLLER
WITH EXPERIMENTAL GRIP

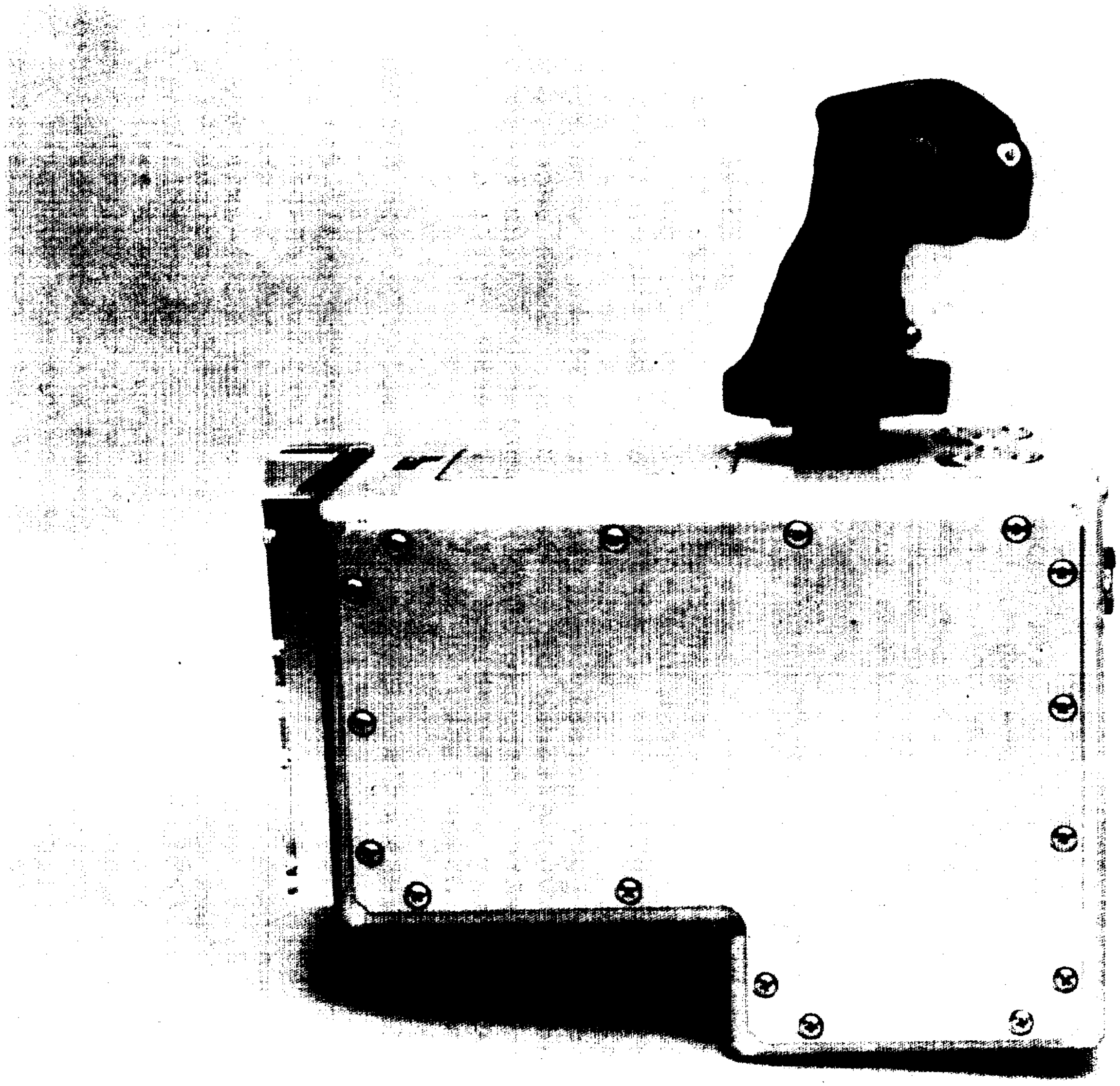

Figure 6-3

ORIGINAL PAGE IS
OF POOR QUALITY

SIMULATION FACILITY COMPARISON

PHASE 1 DATA VS PHASE 2 DATA
ALL DATA - VMC (4+0) MSI-SD2 WITH PHASE 1 SHAPING

ALTITUDE HOLD ON
HEADING HOLD ON

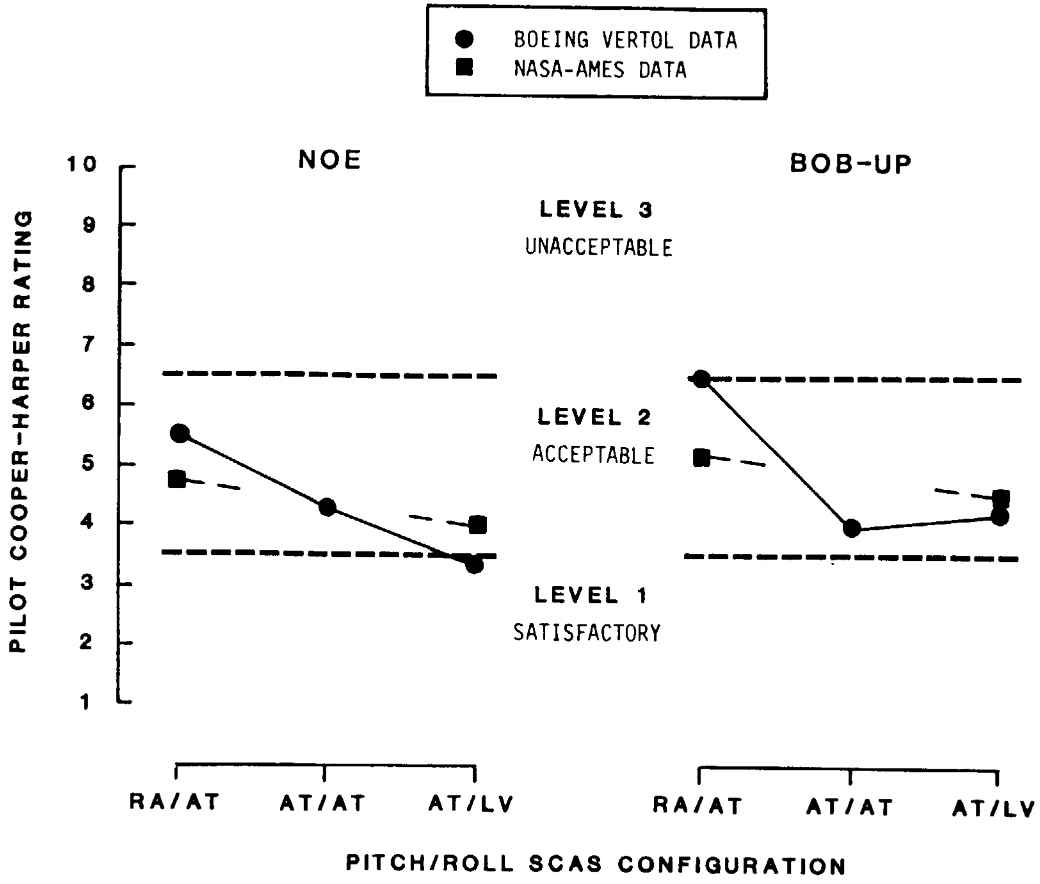

Figure 6-4

Pilot comments indicated that the NASA Ames CGI display provided improved visual cues compared to the Boeing Vertol television display image, especially for maneuvers in the vertical axis. Relative to Phase 1, the NOE Task during Phase 2A seemed qualitatively easier to fly at the same airspeed, and control of height was improved. This effect was particularly noticeable when the task was performed with a rate command (RA/AT) system. The pilots felt that the CGI terrain representation lacked granularity variation with altitude, but the strong motion and peripheral visual cues provided a very effective simulation of the NOE Task.

Advantages of the CGI visual display system and effects of stronger vertical motion cues were more evident during the Precision Hover and Bob-up Task. Pilot comments indicated that the excellent color, clarity, and depth-of-field of the CGI display afforded strong spatial position cues which improved their capability to perform the Precison Hover and Bob-up Tasks. A comparison of average pilot ratings for the Bob-up Task (Figure 6-4) reveals the same trend as data for the NOE Task, i.e. improved performance for the rate command (RA/AT) system and slightly degraded ratings for the attitude command (AT/LV) system. Pilot comments during initial Phase 2A simulation also indicated that their ratings were degraded due to excessive response sensitivity for small force inputs, particularly for the Precision Hover Task. This effect was attributed to the increased motion cues provided to the pilot by the VMS simulator.

6.1.2 Modification of Control Response Shaping

The larger motion and improved visual fidelity of the NASA Ames Vertical Motion Simulator necessitated adjustment to the PFCS command shaping characteristics developed during Phase 1 at Boeing Vertol. In order to provide acceptable response characteristics, both for small high-frequency precision control tasks and low-frequency larger amplitude maneuvers, it was necessary to increase the number of breakpoints in the control response shaping functions, thereby providing a more gradual change of sensitivity gradient.

As an example, pitch and roll attitude command response shaping developed during Phases 1, 2A, and 2B is compared in Figure 6-5. Modifications to the low control force region resulted primarily from pilot comments obtained during performance of the Precision Hover Task. Very small and precise control inputs were required for this task. A higher initial sensitivity gradient as used during Phase 1 resulted in degraded pilot ratings due to a tendency for over-control in the larger motion simulator at NASA-Ames. An increase in response sensitivity for larger control inputs was desirable to reduce control forces required for large maneuvers, i.e. Slalom and Approach-to-Hover.

LONGITUDINAL AND LATERAL ATTITUDE COMMAND SYSTEM RESPONSE SHAPING FUNCTIONS

LONGITUDINAL ATTITUDE RESPONSE

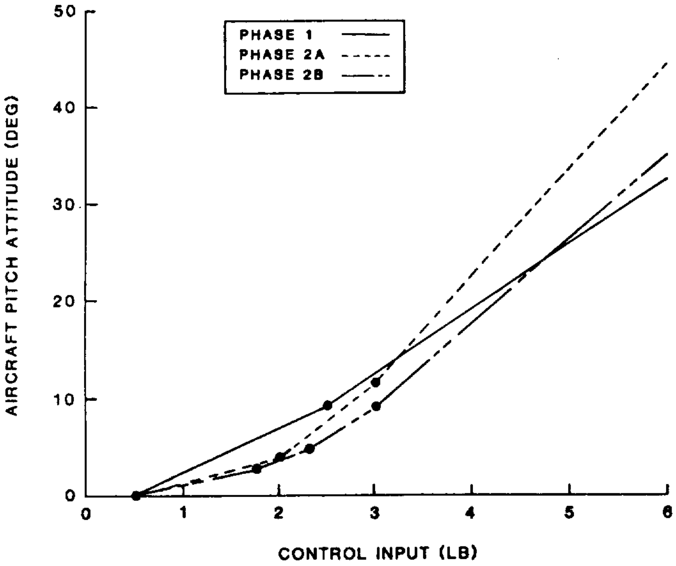

LATERAL ATTITUDE RESPONSE

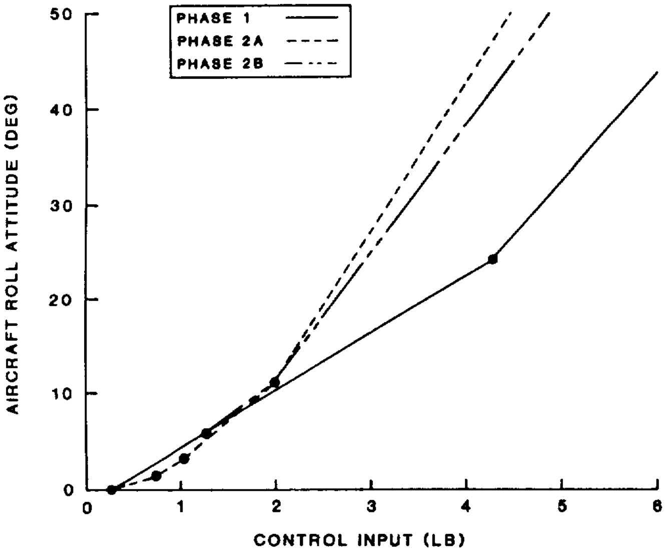

Figure 6-5

Rate response shaping for the vertical and directional axes implemented on the 4-axis controller is shown on Figure 6-6. Because of stronger vertical motion cues provided by the NASA-Ames VMS, vertical response sensitivities were greatly reduced for Phase 2 relative to Phase 1 response shaping. Again, this modified shaping was required primarily for the Precision Hover Task.

A complete set of response shaping functions used to obtain pilot rating data during each simulation phase is provided in Appendix A. Response functions are defined for all control axes and the generic types of command systems investigated.

The effect of the revised vertical axis shaping in terms of pilot ratings is shown in Figure 6-7 for the NOE, Precision Hover and Bob-up Tasks. Pilot ratings obtained for the new small-deflection controller (MSI-SD3) with Phase 1 response shaping are compared to ratings achieved after revised shaping functions were implemented. The improvement in the multi-axis NOE and the Bob-up Tasks was about one pilot rating point. An improvement of 1.5 to 2.0 rating points was achieved for the Precision Hover Task. This result occurred because the Precision Hover task required lower force and high frequency controller inputs in the region most affected by the shaping modifications. For all low speed tasks under VMC, the modified shaping improved pilot ratings and provided Level 1 handling qualities for an attitude command system with velocity stabilization.

6.2 CONTROLLER EVALUATIONS

Phase 2 simulation experiments continued the investigation of the effect of controller force/deflection characteristics and the level of integration of controlled axes on a single controller. The new 4-axis controller design (MSI-SD3) having small-deflection in all axes was fabricated specifically for Phase 2A. This controller was compared to MSI-SD2 which achieved best pilot ratings during Phase 1. In addition, the 4-axis stiff controller (MSI-SS) was available for use as a right-hand controller or a single-axis left-hand controller for vertical. Left-hand side-stick control of the vertical axis was evaluated in the (3+1) Collective configuration through the longitudinal control axis of either MSI-SS or MSI-SD2.

The various controller configurations are identified by numerical subscripts to indicate both the right-hand and left-hand (where applicable) controllers being evaluated. For example, (4+0) MSI-SD3 indicates that the MSI-SD3 controller was evaluated as a right-hand 4-axis device while (3+1) Collective MSI-SD3, MSI-SD2 is the identifier for a configuration consisting of the MSI-SD3 Controller on the right as a 3-axis device and the MSI-SD2 Controller on the left solely for collective control.

DIRECTIONAL AND VERTICAL RATE COMMAND SYSTEM RESPONSE SHAPING FUNCTIONS

DIRECTIONAL RATE RESPONSE

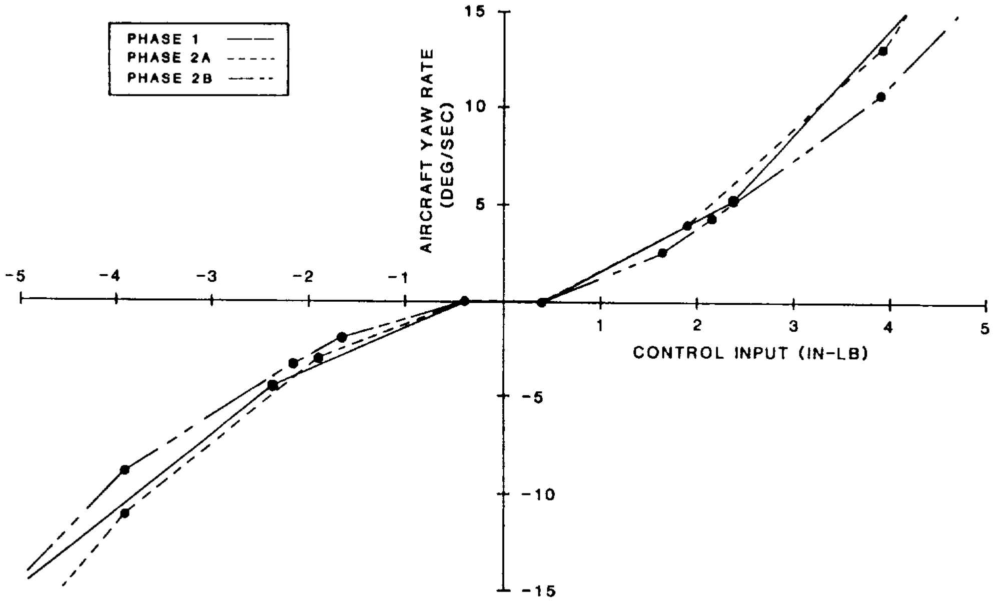

VERTICAL RATE RESPONSE

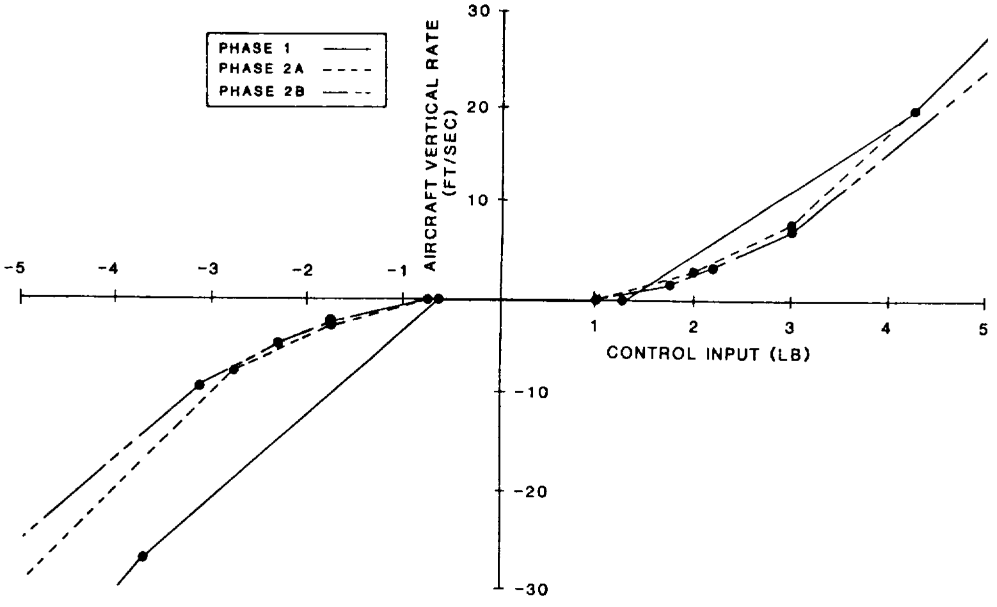

Figure 6-6

EFFECT OF VERTICAL SHAPING CHANGES

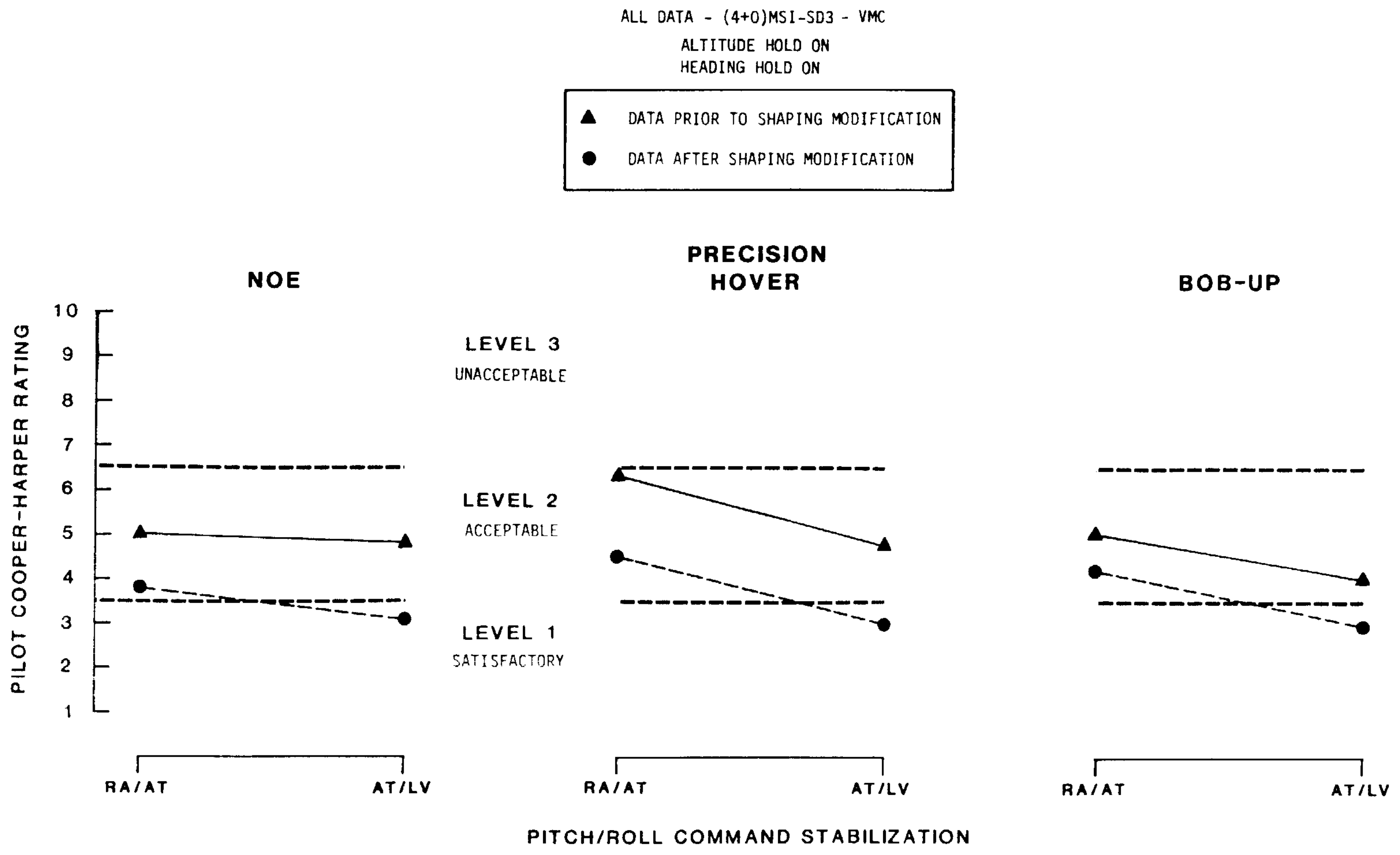

Figure 6-7

6.2.1 Controller Orientation

Controller orientation for both the right-hand and left-hand side-stick controller was adjusted to a position acceptable for all test pilot participants. Orientations were chosen to minimize interaxis control inputs as well as to provide a comfortable arm position to reduce fatigue. Figure 6-8 illustrates the orientations used during Phase 2A and Phase 2B. A picture of the controller installation for both simulation phases is given in Figure 6-9. As shown, left-hand side-stick controller orientation for both simulation phases was very similar. Since the left-hand controller was only for single-axis vertical control, interaxis coupling was not a problem and comfort was the only factor affecting orientation of the left-hand side-stick. Selecting a suitable right-hand controller orientation was more difficult. The Phase 2A right-hand controller orientation shown was chosen for the MSI-SD3 controller. During Phase 2B, the ADOCS Brassboard (LSI) controller replaced the MSI-SD3 as the prime right-hand SSC. Small differences in forward tilt and inboard twist were required for each controller as seen in Figure 6-9. The right-side armrest position was altered to accommodate the larger physical size of the LSI controller unit. Pilot ratings presented in Section 6.2.4 compare the MSI-SD3 and LSI Brassboard controllers with each having the orientation as shown; no difference in pilot ratings was noted. All pilots agreed that the orientation selected for each of the controllers was satisfactory.

6.2.2 Alternate 4-Axis Controller Comparison

The new small-deflection controller (MSI-SD3) was introduced to the simulation study during Phase 2A and tested relative to the MSI-SD2 and MSI-SS configurations used during Phase 1. Each controller was evaluated in the (4+0) configuration for three low speed tasks--NOE, Precision Hover, and Bob-up. Figure 6-10 presents a comparison of pilot ratings for the three 4-axis controllers shown in Figure 6-2.

For all low-speed tasks the MSI-SS and MSI-SD2 controller received pilot ratings that were degraded approximately one rating point compared to the MSI-SD3 configuration. The MSI-SD3 controller was the only 4-axis configuration to receive Level 1 ratings of approximately 3.0 to 3.5 with the higher levels of pitch and roll command and stabilization. With the same AFCS configurations, i.e. AT/AT and AT/LV, the MSI-SS and MSI-SD2 controller achieved Level 2 pilot ratings of approximately 4.0. In general, higher AFCS stabilization levels for all controllers significantly reduced the effects of inadvertent control inputs or aircraft upsets, and less stabilized AFCS configurations increased pilot workload.

As observed during Phase 1, it was more difficult with the

SIDE-STICK CONTROLLER ORIENTATIONS

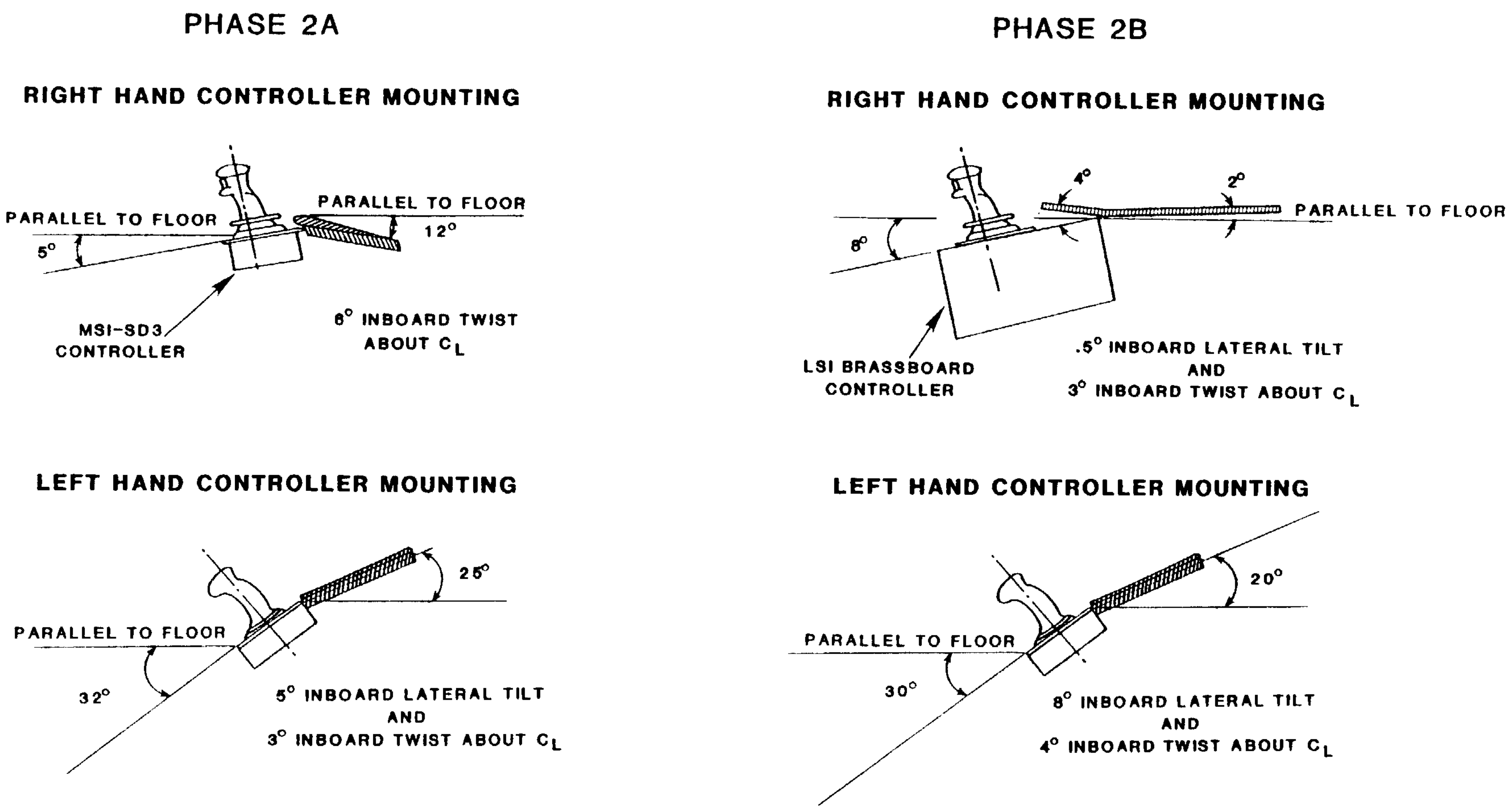
PHASE 2A
RIGHT HAND CONTROLLER MOUNTING
PARALLEL TO FLOOR
5°
PARALLEL TO FLOOR
12°
MSI-SD3 CONTROLLER
6° INBOARD TWIST ABOUT C_L
LEFT HAND CONTROLLER MOUNTING
25°
PARALLEL TO FLOOR
32°
5° INBOARD LATERAL TILT AND 3° INBOARD TWIST ABOUT C_L
PHASE 2B
RIGHT HAND CONTROLLER MOUNTING
8°
4°
2°
PARALLEL TO FLOOR
LSI BRASSBOARD CONTROLLER
.5° INBOARD LATERAL TILT AND 3° INBOARD TWIST ABOUT C_L
LEFT HAND CONTROLLER MOUNTING
20°
PARALLEL TO FLOOR
30°
8° INBOARD LATERAL TILT AND 4° INBOARD TWIST ABOUT C_L

Figure 6-8

SSC INSTALLATION COMPARISON

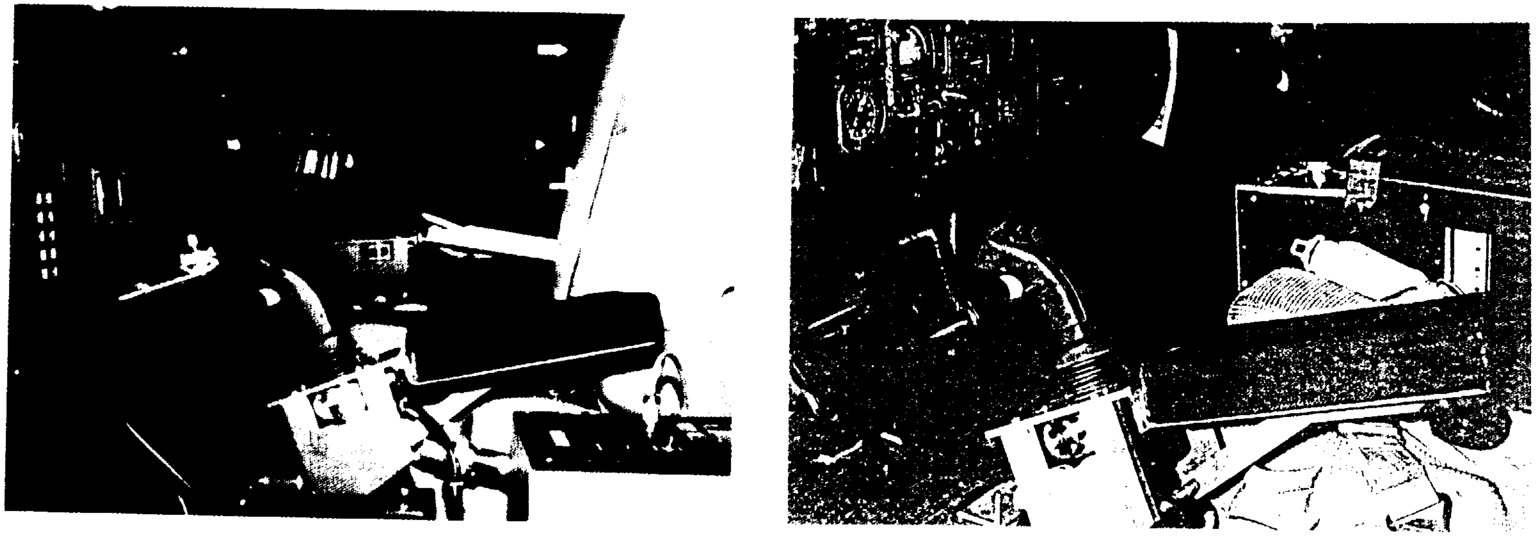

PHASE 2A

PHASE 2B

Figure 6-9

ORIGINAL PAGE IS
OF POOR QUALITY

4-AXIS CONTROLLER COMPARISON

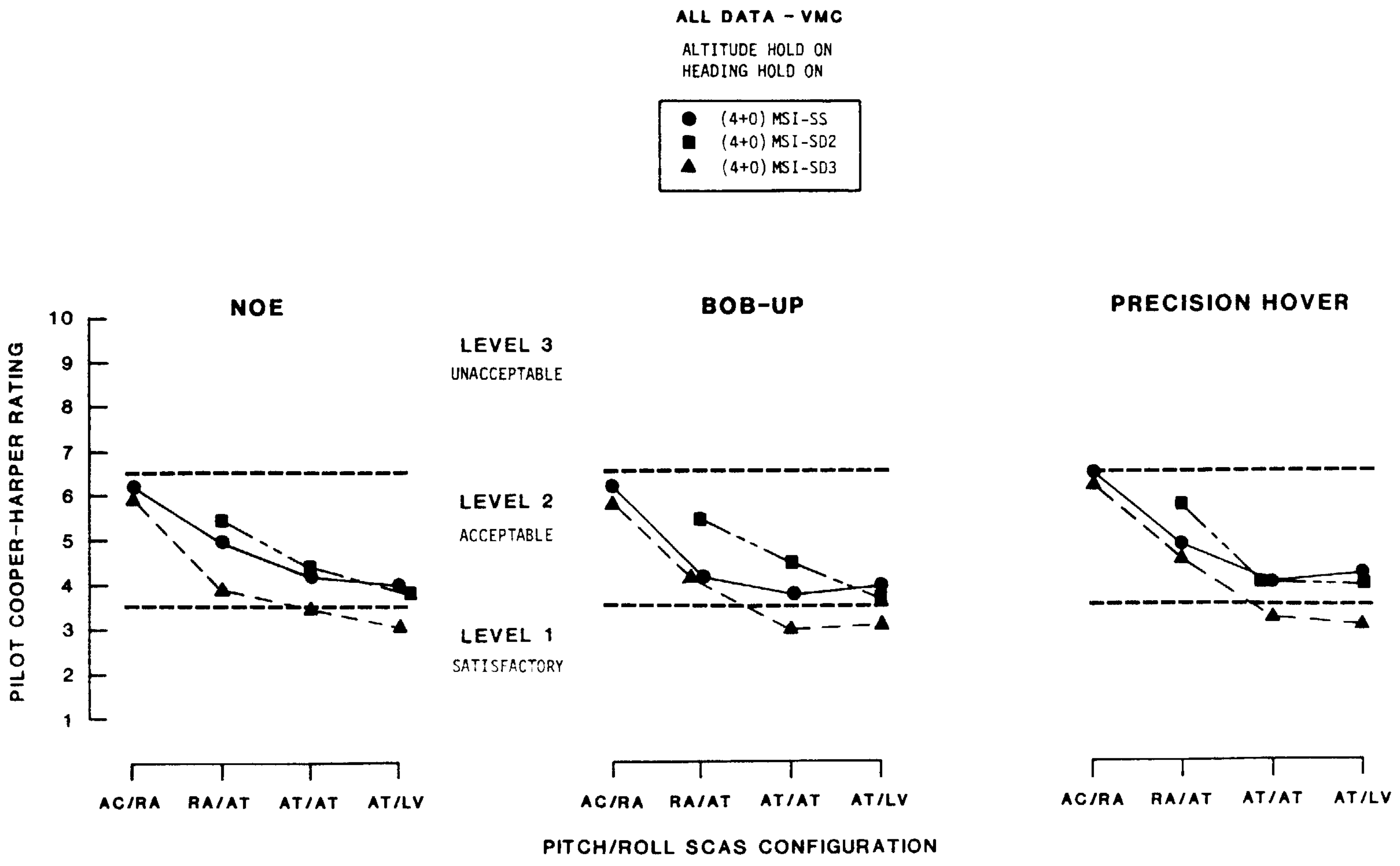

Figure 6-10

stiff-stick to modulate forces, particularly for high-frequency control tasks such as the Precision Hover. The stiff controller provided poor tactile feedback to the pilot and gave the feeling of not being 'tight' in the control loop, especially during large amplitude maneuvers. The stiff-stick also exhibited more of a tendency toward pilot-induced oscillation (PIO).

The MSI-SD3 Controller (deflection in all axes) was unanimously preferred by all pilots over both the MSI-SD2 Controller and the stiff-stick design (MSI-SS). All pilots felt that deflection in each control axis provided better definition of individual axis commands, reduced the tendency for inadvertent coupling of control inputs, and allowed precision control tasks to be performed more accurately.

Based on pilot comments the MSI-SD2 Controller (deflection in pitch and roll) was considered an improvement for pitch and roll control when compared to the stiff controller design. However, overall pilot ratings were slightly more degraded than the stiff-stick controller. Pilot comments again indicated that poor control force harmony resulted from the combination of two stiff control axes and two deflection control axes on the same controller. This controller (MSI-SD2) had undesirable force modulation characteristics in yaw and collective. High frequency control was difficult in these axes and performance during the Precision Hover Task, although better than the stiff controller (MSI-SS), was marginally acceptable. Both MSI-SS and MSI-SD2 provided Level 2 handling qualities for all tasks and AFCS configurations.

One important anthropometric characteristic was common to all 4-axis controllers evaluated; the pitch and yaw orientation of the controller and grip with respect to the armrest was critical to minimize pilot fatigue and reduce cross-axis coupling.

Three minor problems were observed with the MSI-SD3 Controller design during the course of Phase 2 testing:

(1) Maximum yaw axis control travel and forces were excessive for comfortable hand-wrist motion.

(2) Forward tilt of the grip with respect to controller mount introduced inadvertent roll/yaw coupling.

(3) Small mechanical free-play (manifested as a force deadband) degraded precise longitudinal axis control for small control inputs.

6.2.3 Left-Hand Vertical Side-Stick Controller Evaluation

A comparison of the stiff-stick (MSI-SS) and small-deflection controller (MSI-SD2) mounted on the left as a vertical controller in a (3+1) Collective configuration was performed. Right-hand control of pitch, roll, and yaw was accomplished using the

MSI-SD3 Controller. For the data presented, both the directional and vertical axes were implemented as rate command systems with Heading Hold in the yaw axis and Altitude Hold in the vertical axis.

Results of the evaluation are presented in Figure 6-11. The left-hand deflection controller improved pilot ratings by an average of one-half point compared to the stiff controller. Level 1 ratings were achieved with an attitude command system (AT/AT or AT/LV) in pitch and roll for all low speed tasks. Pilot performance was particularly improved during the Bob-up Task where accurate control of aircraft height was required. Pilots found that collective control forces and small height changes were easier to modulate if small deflection was provided in the left-hand vertical controller. Based on these results, the small-deflection controller (MSI-SD2) was selected as the primary left-hand vertical controller for subsequent evaluation of the (3+1) Collective and (2+1+1) controller configurations during Phase 2.

6.2.4 ADOCS Brassboard Controller Evaluation

An initial investigation was performed during Phase 2B to evaluate the ADOCS brassboard controller manufactured by Lear-Siegler, Inc. in comparison to the MSI-SD3 small-deflection controller utilized for Phase 2A simulation study. The brassboard controller was designed to have force/deflection characteristics similar to the MSI-SD3 controller (Table 3-1).

Various VMC tasks were flown to compare both controllers using the same grip (Canadian NAE version as described in Volume 2). Figure 6-12 presents pilot ratings for the NOE Task with both controllers in a 4-axis configuration. As shown, little difference in pilot ratings resulted between the two controller configurations. Pilot comments indicated that the brassboard controller "felt" slightly better. Therefore, it was used for the remainder of Phase 2B simulation.

6.2.5 Alternate Grip Comparison

Pilot comments from Phase 1 and Phase 2A simulations led Boeing Vertol to develop an alternate grip design (Figure 6-13). The objective of the new grip design was to provide better defined grip control surfaces, especially for application of directional and vertical forces. This alternate grip design was available at the start of Phase 2B simulation for comparison to the Canadian NAE-type grip used during Phase 2A.

Both grips were evaluated back-to-back when mounted on the ADOCS brassboard controller. For both the NOE and Precision Hover Tasks performed under VMC, the Canadian NAE grip was preferred. The experimental grip was found to be unacceptable by all evaluation pilots. Though it did provide better defined

LEFT-HAND VERTICAL CONTROLLER COMPARISON

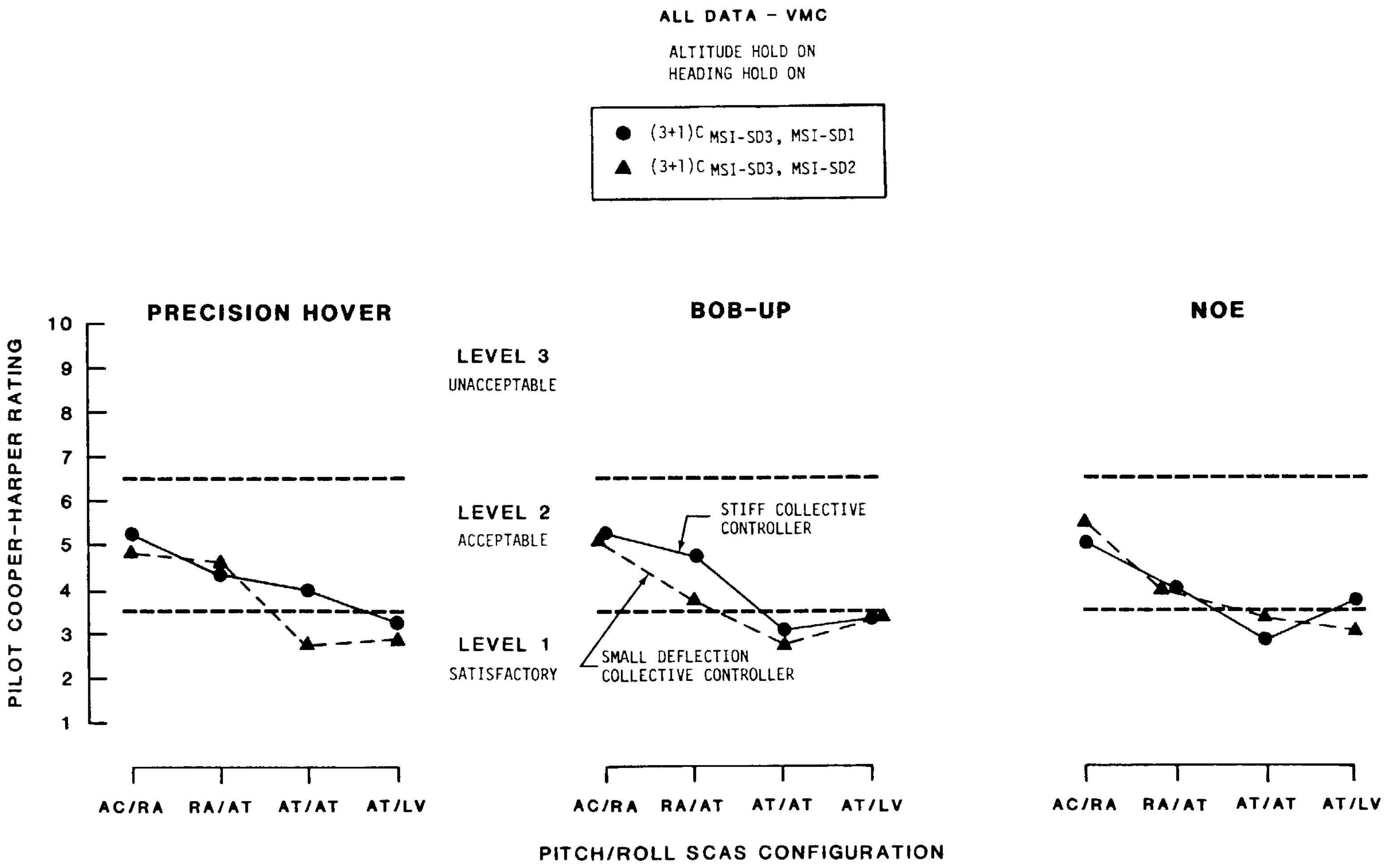

Figure 6-11

4-AXIS CONTROLLER COMPARISON

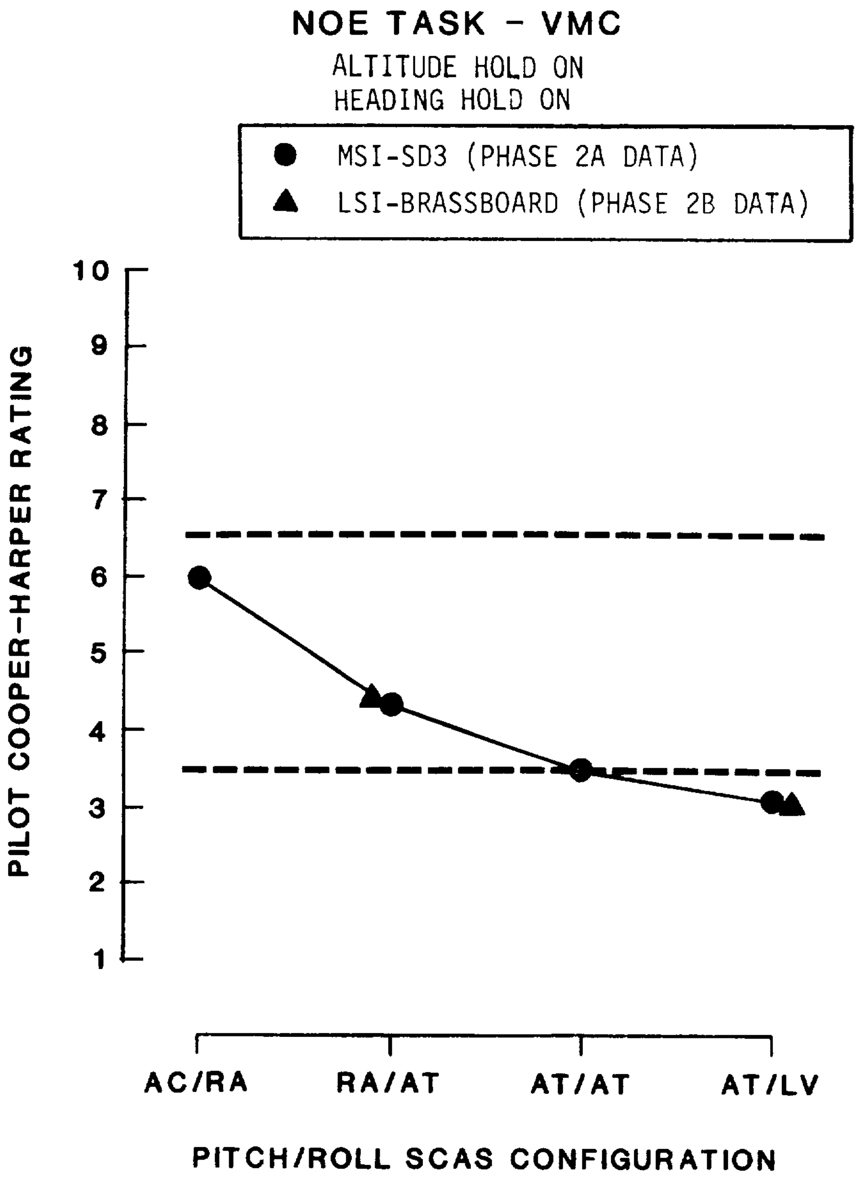

Figure 6-12

GRIP COMPARISON

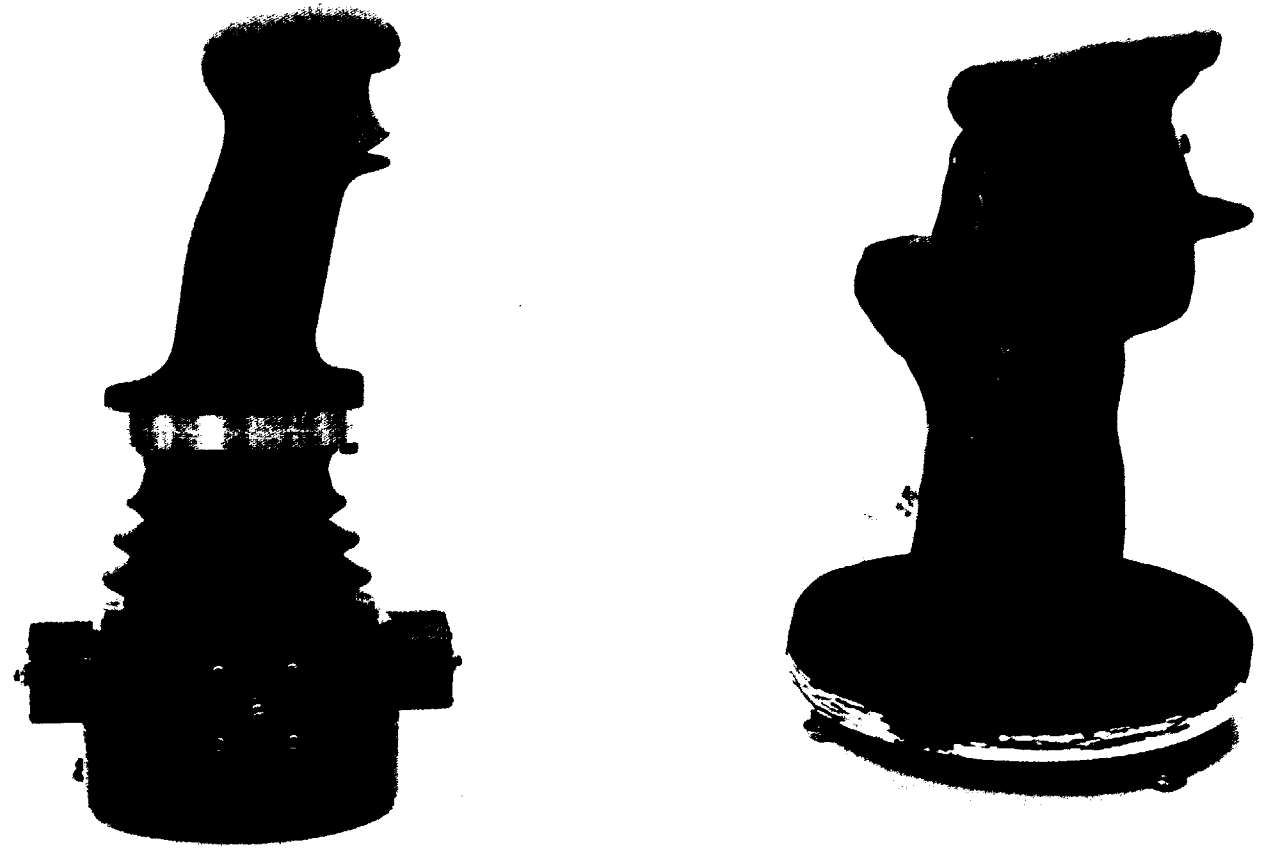

CANADIAN NAE TYPE GRIP

BOEING EXPERIMENTAL GRIP

Figure 6-13

ORIGINAL PAGE IS
OF POOR QUALITY

control surfaces, the pilots found that it was uncomfortable, awkward, and created a tendency to tightly grip the controller.

6.3 CONTROLLER/SCAS CONFIGURATION EFFECTS

All tasks were evaluated with three selected controller configurations (i.e. (4+0), (3+1) Collective, and (2+1+1)) to assess the effects of side-stick controller integration level on handling qualities. Overall Phase 1 pilot ratings for the (3+1) Pedal configuration were not as good as the (3+1) Collective and (2+1+1) controller configurations. Therefore, the (3+1) Pedal configuration was not included during Phase 2 in order to concentrate on improvement of vertical control through a separated vertical controller.

6.3.1 Low-Speed Tasks

A summary of results obtained for variations of pitch and roll SCAS and controller configurations is shown in Figure 6-14 for three low speed VMC tasks--NOE, Precision Hover, and Bob-up. Data in Figure 6-14 were obtained for VMC with yaw rate command/heading stabilization and vertical velocity command/altitude stabilization in the directional and vertical axis, respectively.

For the VMC low-speed tasks, the effect of pitch and roll SCAS configuration is very consistent for all controller configurations and tasks. As shown on Figure 6-14, an attitude command system with either attitude stabilization (AT/AT) or with groundspeed stabilization (AT/LV) was required to achieve Level 1 ratings for these tasks under VMC. The rate command/attitude stabilization system (RA/AT) resulted in Level 2 ratings for all controller configurations and tasks. The acceleration command/rate stabilization system (AC/RA) however, consistently provided borderline Level 2/Level 3 ratings.

Pitch and Roll SCAS Configurations

Time histories for the NOE Task (Figures 6-15 and 6-16) show the degradation in task performance with a rate command/attitude stabilization (RA/AT) system compared to an attitude command/velocity stabilization system (AT/LV). Large variations of bank angle occur throughout the task with the rate command system, resulting in larger sideslip excursions than exhibited with the attitude command system. Tighter control of bank angle and side-slip was achieved with the AT/LV system as evident by the improved pilot ratings.

Higher levels of stability and control augmentation were evaluated for the Precision Hover and Bob-up Tasks in addition to the same SCAS systems evaluated for the low-speed maneuvering tasks: the NOE and 30-Knot Slalom Tasks. Two velocity-command systems were included in the matrix of test configurations: one having outer-loop groundspeed stabilization

SUMMARY OF PILOT DATA FOR LOW SPEED TASKS

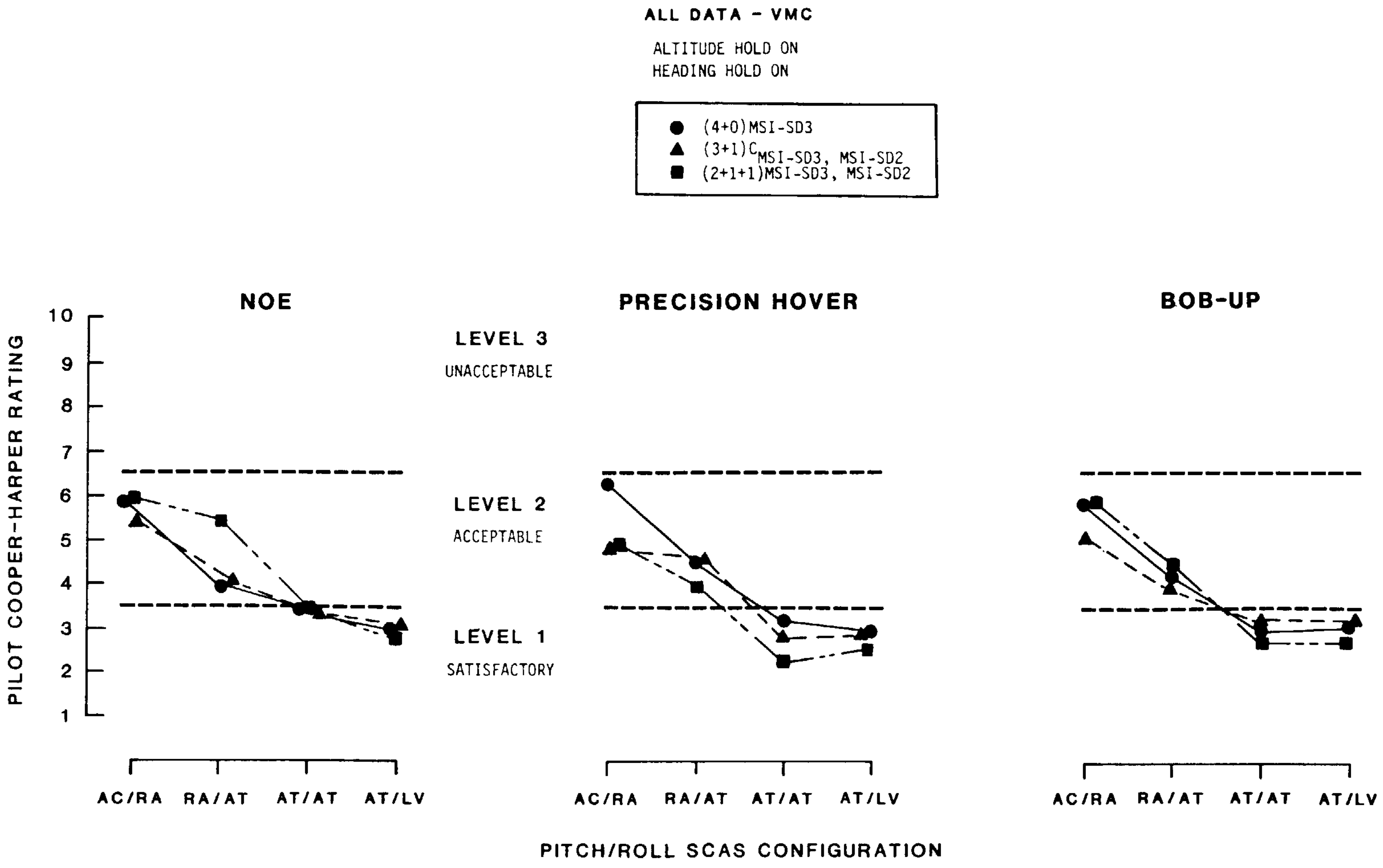

Figure 6-14

TIME HISTORY OF NOE TASK - IMC
RA/AT SYSTEM

CMD/STAB SYSTEM - RA/AT, $\dot{\psi}/\psi_H$, $\dot{h}/h_H$

CONTROLLER CONFIGURATION - (4+0)LSI

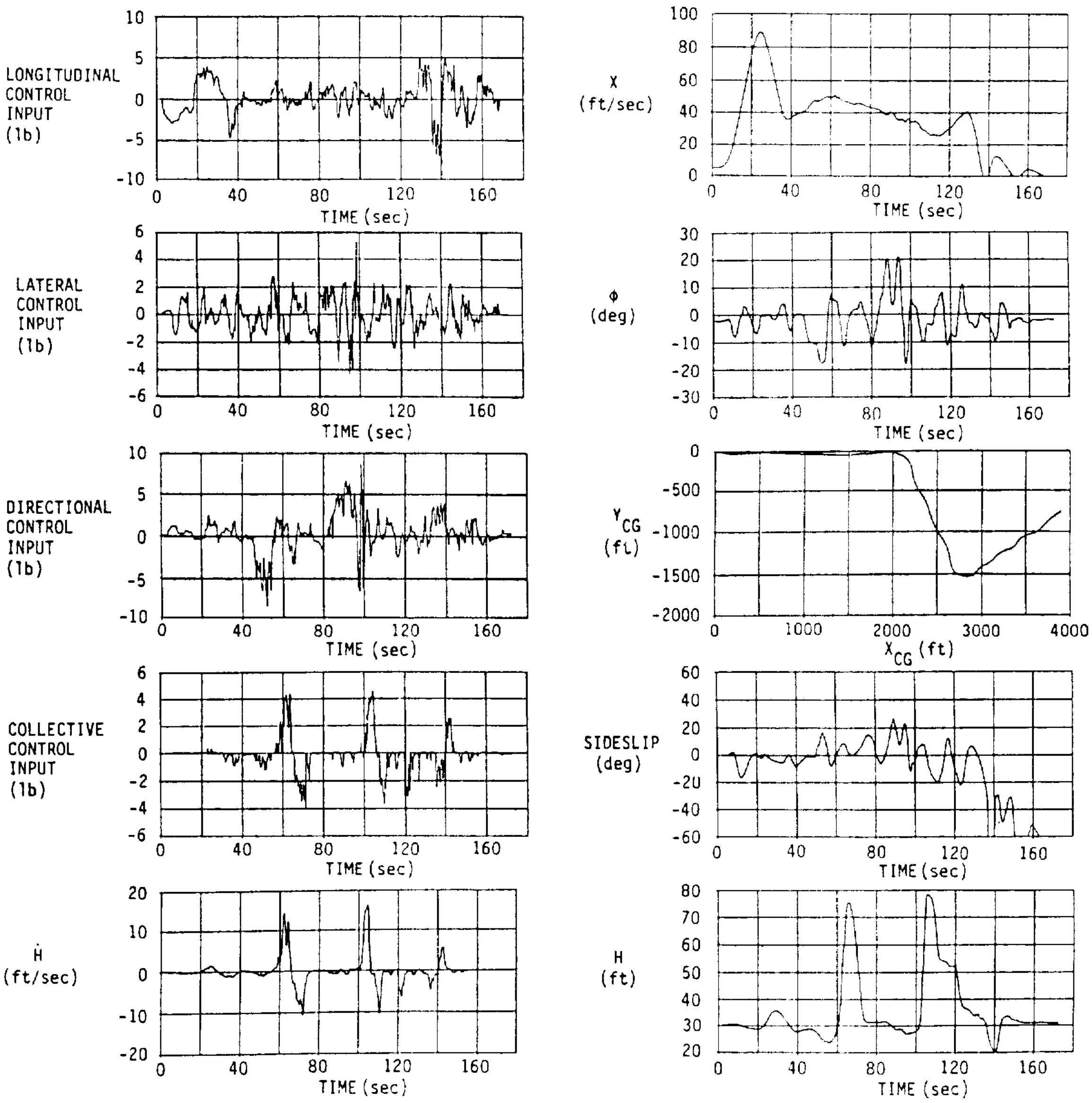

Figure 6-15

TIME HISTORY OF NOE TASK - IMC
AT/LV SYSTEM

CMD/STAB SYSTEM - AT/LV, $\dot{\psi}/\psi_H$, $\dot{h}/h_H$
CONTROLLER CONFIGURATION - (4+0)LSI

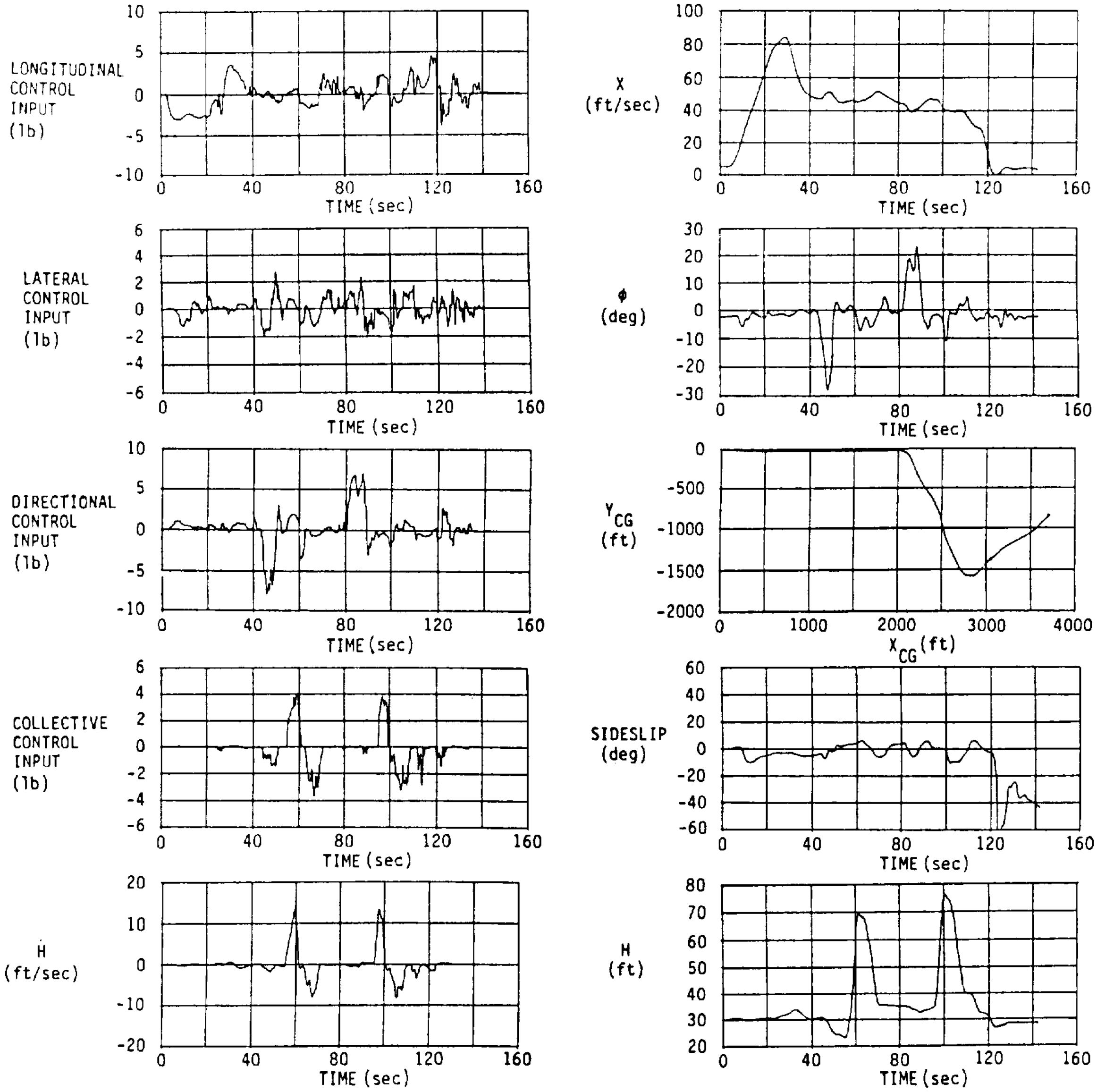

Figure 6-16

(LV/LV) and the other incorporating a position-hold feature (LV/PH).

Pilot ratings for the IMC Precision Hover Task under wind and turbulence conditions (Figure 6-17) were improved with a velocity-command system (LV/LV) compared with an attitude-command system (AT/LV). Satisfactory ratings were obtained with all controller configurations evaluated, with the velocity-command/position-hold (LV/PH) system which received the best ratings, approximately 2.5 on the Cooper-Harper scale. In the calm air condition, all SCAS configurations obtained Level 1 ratings.

As shown in Figure 6-18, the highest level of command/stabilization (i.e. LV/PH) was required to achieve Level 1 pilot ratings for the IMC Bob-up Task with wind shear and turbulence. Without the Position Hold Mode engaged, Level 2 ratings were achieved for this task. In calm air however, Level 1 ratings were obtained for all controller configurations and SCAS systems evaluated.

Yaw and Vertical SCAS Configurations

A comparison of SCAS configuration changes in the yaw and vertical axes is presented on Figures 6-19 and 6-20. The effects of switching from yaw rate to yaw acceleration command (Heading Hold Off) or vertical velocity to vertical acceleration command (Altitude Hold Off), was defined for all controller configurations; however, only the (4+0) MSI-SD3 and (3+1) Collective MSI-SD3, MSI-SD2 configurations data are presented.

A yaw rate command/Heading Hold system was preferred by all pilots for all evaluation tasks. Level 1 ratings were achieved for this directional control system with pitch and roll attitude command configurations, i.e. AT/AT and AT/LV. With a yaw rate command system, the pilots could modulate yaw rate precisely and make deadbeat heading changes with low workload. Yaw acceleration command made it very difficult for the pilots to achieve a desired yaw rate, and multiple control inputs were required to control the helicopter to a desired heading. Yaw acceleration control, especially during yaw reversals, lacked precision and gave a feeling of increased yaw inertia.

The effect of yaw acceleration command on pilot ratings varied with the task. Figure 6-19 shows that the greater the requirement for directional control during the task, the larger the degradation of pilot ratings. The Precision Hover Task, with a minimum requirement for compensation in yaw, showed little difference in ratings. For the NOE Task, where yaw inputs were required to coordinate the turns, an average degradation of one pilot rating point resulted. The Bob-up Task required the pilot to modulate yaw control forces accurately to arrive at a specific target heading. Pilot ratings with a yaw acceleration command system for this task degraded by as much as two rating

PILOT RATINGS FOR PRECISION HOVER TASKS

- IMC -

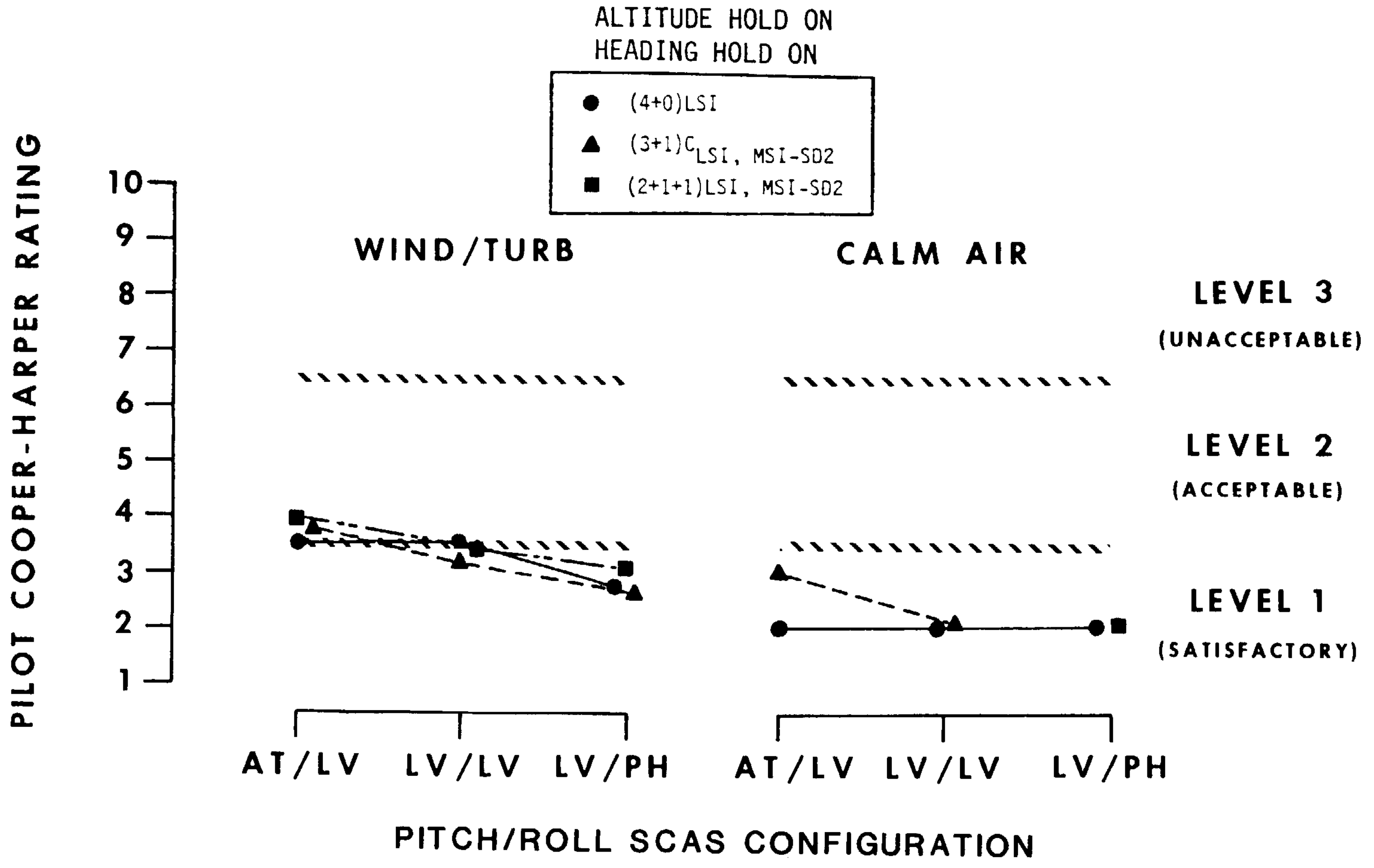

Figure 6-17

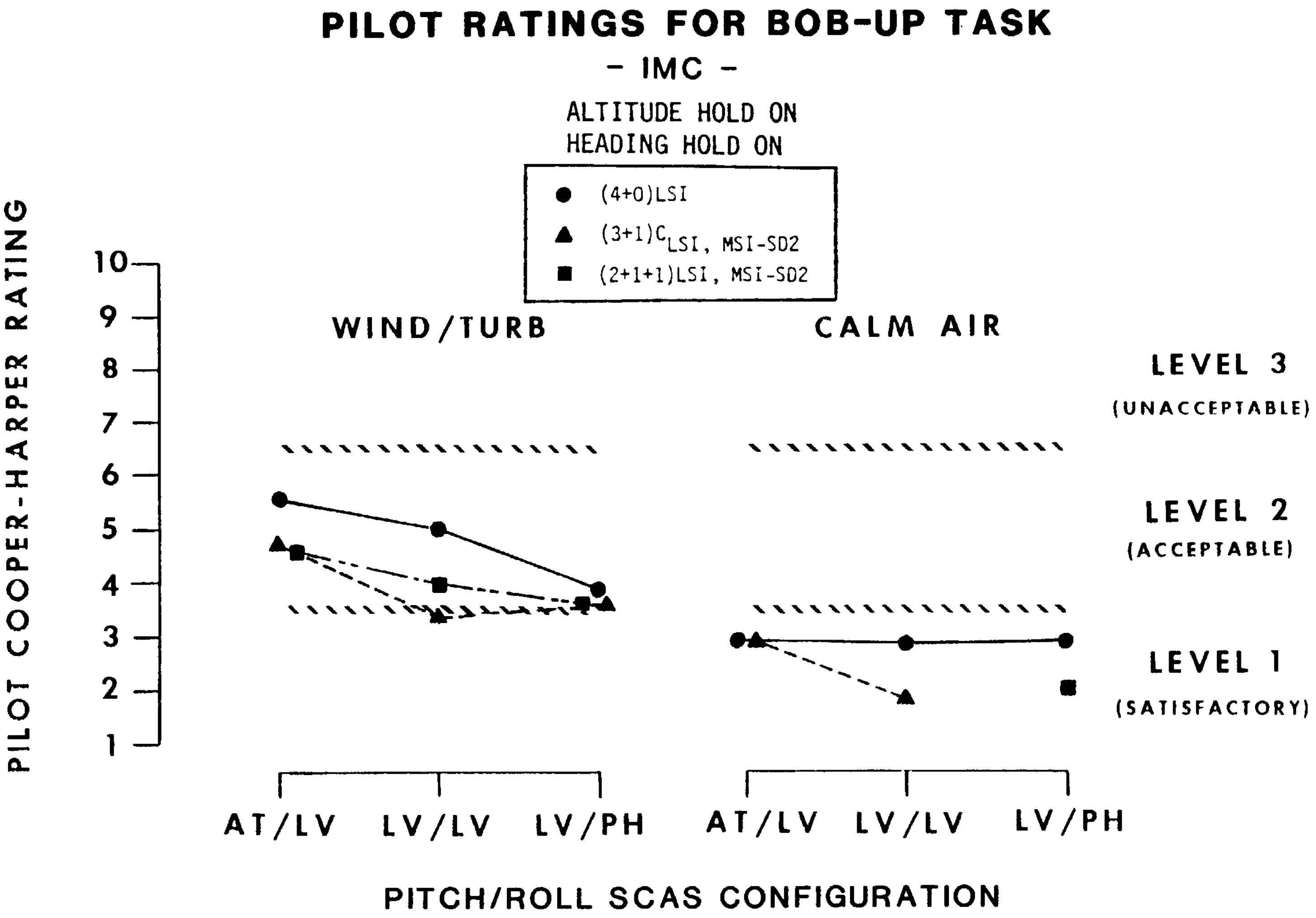
PILOT RATINGS FOR BOB-UP TASK
- IMC -
ALTITUDE HOLD ON
HEADING HOLD ON
● (4+0)LSI
▲ (3+1)C$_{LSI}$, MSI-SD2
■ (2+1+1)LSI, MSI-SD2
WIND/TURB
CALM AIR
LEVEL 3
(UNACCEPTABLE)
LEVEL 2
(ACCEPTABLE)
LEVEL 1
(SATISFACTORY)
PILOT COOPER-HARPER RATING
10
9
8
7
6
5
4
3
2
1
AT/LV
LV/LV
LV/PH
AT/LV
LV/LV
LV/PH
PITCH/ROLL SCAS CONFIGURATION

Figure 6-18

EFFECT OF DIRECTIONAL SCAS VARIATIONS ON PILOT RATINGS

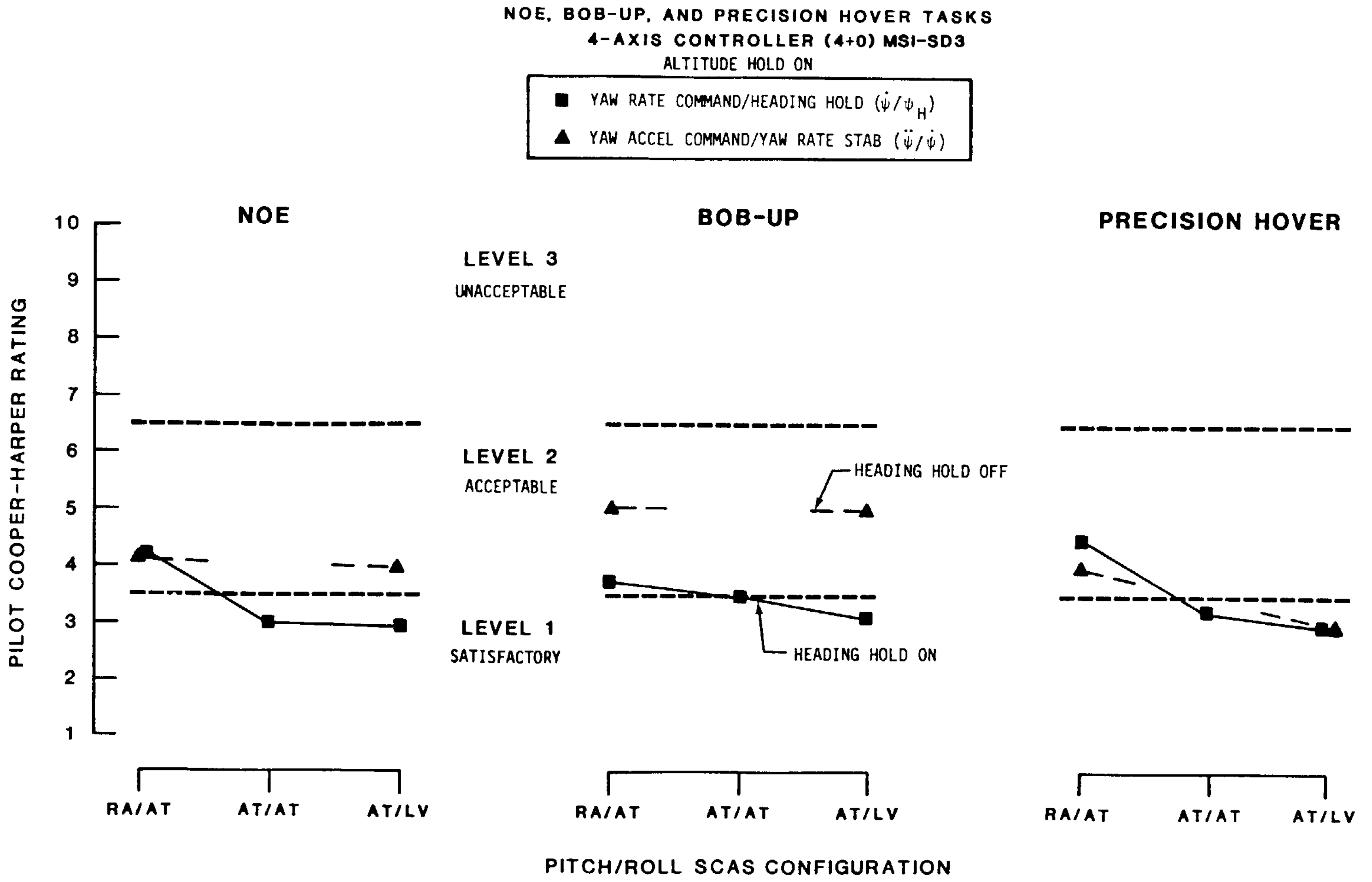

Figure 6-19

EFFECT OF VERTICAL SCAS VARIATONS ON PILOT RATINGS

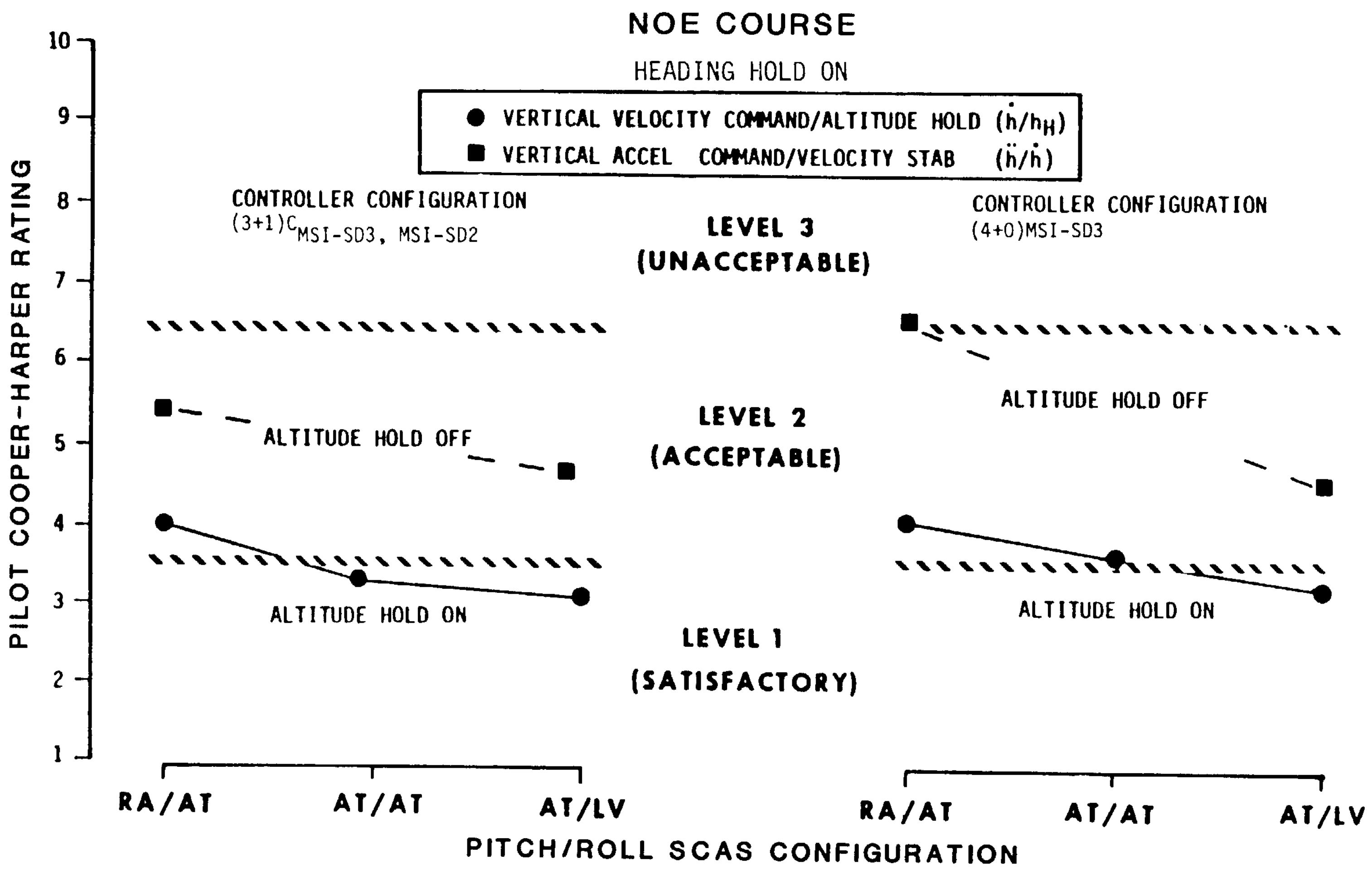

Figure 6-20

points compared to the yaw rate command system. Level 1 pilot ratings with yaw acceleration command were only achieved for the Precision Hover Task with a pitch and roll attitude command system. The Bob-up and NOE Tasks, which required larger directional control maneuvers, exhibited Level 2 pilot ratings.

Figure 6-20 shows that the vertical velocity command/Altitude Hold system achieved the best pilot ratings in conjunction with all pitch and roll SCAS systems in the (4+0) MSI-SD3 and (3+1) Collective controller configuration. Pilot comments indicated that it was difficult to modulate vertical velocity precisely with the acceleration command system. Consequently, vertical control was imprecise and required multiple reversals to attain a desired altitude. The vertical velocity command/Altitude Hold system made precise modulation of vertical velocity and altitude easier, thereby considerably reducing pilot workload.

Vertical acceleration control on the side-stick offered the benefit of eliminating the need to hold vertical forces to achieve a steady vertical velocity (while modulating forces in other axes at the same time). However, the benefits of Altitude Hold and vertical velocity command apparently offset the disadvantage of holding vertical control forces.

A comparison of data for the (4+0) MSI-SD3 and (3+1) Collective MSI-SD3, MSI-SD2 controller configurations in Figure 6-20 indicates that for the lower level pitch and roll SCAS configurations, separating vertical control from the right-hand side-stick controller was beneficial with Altitude Hold Off, e.g. about one rating point improvement for the RA/AT system.

Controller Configuration Effects

The effects of separate vertical and yaw controllers--(3+1) Collective and (2+1+1) configurations--were evaluated for all the low-speed tasks. Figure 6-14 shows that pilot ratings for the (4+0) MSI-SD3, the (3+1) Collective, and the (2+1+1) controller configurations were essentially equal for the NOE Task under VMC. Level 1 ratings were achieved for higher SCAS stabilization levels. For the Precision Hover and Bob-up Tasks, separation of controllers had a more significant effect on pilot ratings. An improvement in pilot ratings was achieved with the (2+1+1) controller configuration which received ratings of 2.0 to 2.5 for the Precision Hover Task. At reduced SCAS stabilization levels, this trend was not as evident.

Controller configuration did not have a significant effect on pilot ratings for the NOE Task under IMC. Collective control inputs were required only for single-axis vertical maneuvering over the berms. Providing vertical control from a separate left-hand controller did not have a noticeable effect on pilot rating for this task. Figure 6-21 shows that the 4-axis

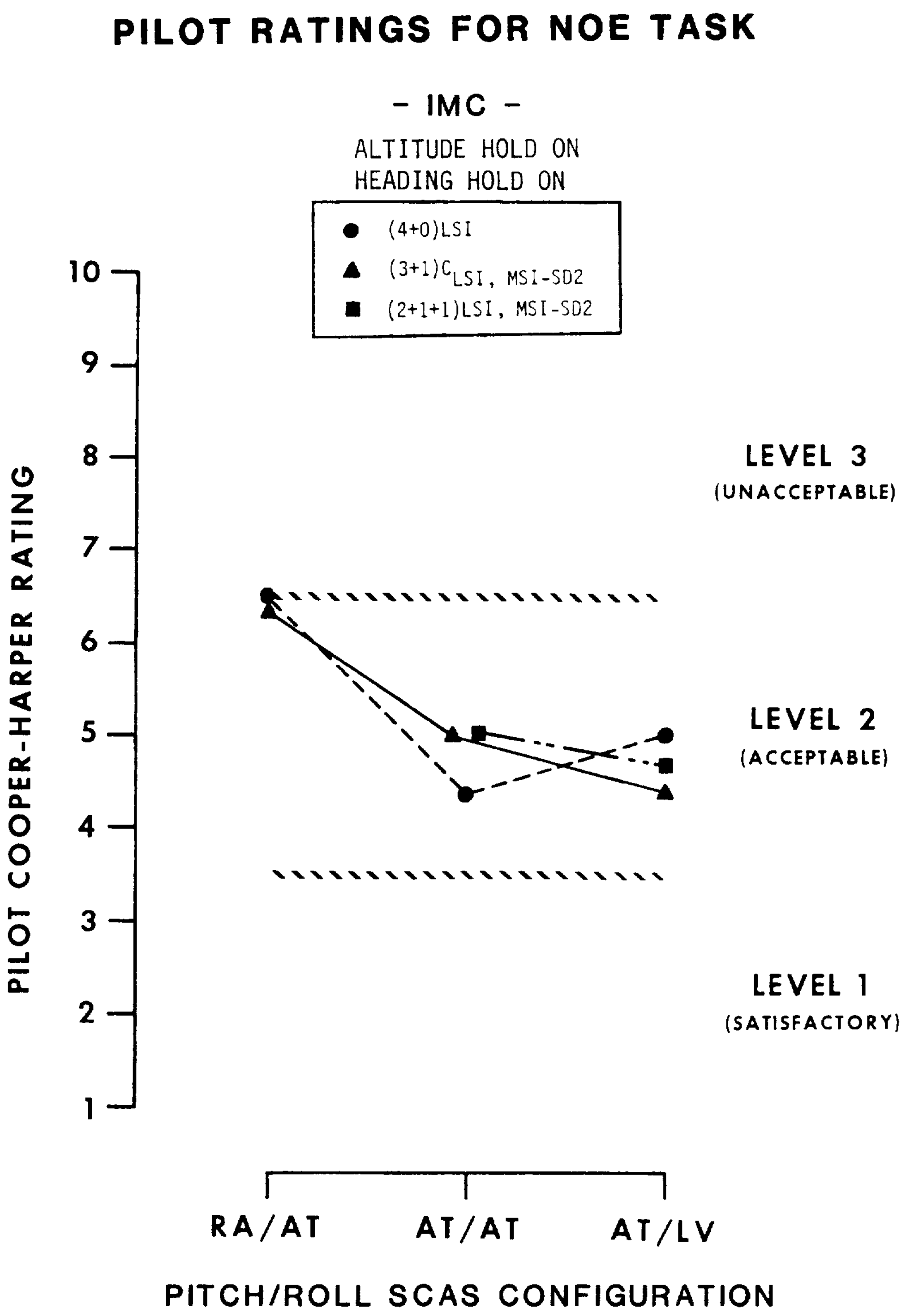
PILOT RATINGS FOR NOE TASK
- IMC -
ALTITUDE HOLD ON
HEADING HOLD ON
● (4+0)LSI
▲ $(3+1)^{C}$LSI, MSI-SD2
■ (2+1+1)LSI, MSI-SD2
PILOT COOPER-HARPER RATING
10
9
8
7
6
5
4
3
2
1
LEVEL 3
(UNACCEPTABLE)
LEVEL 2
(ACCEPTABLE)
LEVEL 1
(SATISFACTORY)
RA/AT
AT/AT
AT/LV
PITCH/ROLL SCAS CONFIGURATION

Figure 6-21

controller achieved pilot ratings comparable to the (3+1) Collective and (2+1+1) configurations for the NOE Task.

Little preference for a particular controller configuration was noticed for the IMC Precision Hover Task as well (Figure 6-17). This task required high-frequency pilot control using primarily single-axis inputs. Cross-axis control coupling was not a major problem for the Precision Hover Task. The Bob-up however, showed a distinct preference for separate controllers under IMC with or without wind shear and turbulence (Figure 6-18). As the Bob-up required multi-axis inputs, cross-axis coupling with a 4-axis controller became more noticable as the stability level decreased.

Effect of Wind Shear and Turbulence

Most pilot rating data collected during Phase 2B for the Bob-up and Precision Hover Tasks were obtained under conditions of wind shear and moderate turbulence; initial baseline data were gathered in calm air for comparison. The effect of wind shear and turbulence on pilot ratings is also shown on Figures 6-17 and 6-18 for both the Bob-up and Precision Hover Tasks. Pilot ratings were degraded approximately 1.5 points under turbulence and wind shear conditions.

The effect of turbulence on Bob-up Task performance is presented in Figure 6-22. Deviations in longitudinal and lateral position from the desired hover location are used to calculate a mean radius, the radius of a circle containing one-half the total number of data points. For a lower level of stability and control augmentation, mean radius is significantly greater with turbulence compared with calm-air conditions. Even though the pilots' ratings for the IMC Bob-up Task were degraded, their performance under IMC was better than VMC performance. This outcome is due to the lack of strong visual position cues in the simulation under VMC, particularly at the higher altitudes reached during the Bob-up maneuver. Also, the additional guidance provided to the pilot by the IHADSS display symbols is an advantage for maintaining a Precision Hover under IMC.

6.3.2 Slalom Tasks

The 30-, 90-, and 140-Knot Slalom Tasks were all designed as lateral avoidance maneuvers to test lateral/directional controllability. The 30-Knot Slalom required manual turn coordination while both the high-speed Slalom Tasks evaluated the automatic turn coordination feature designed in the ADOCS AFCS.

Pitch and Roll SCAS Configurations

For the 30-Knot Slalom Task under IMC, the AT/LV system re-

EFFECT OF TURBULENCE ON BOB-UP PERFORMANCE

—IMC AND VMC— DATA FOR 4-AXIS CONTROLLER CONFIGURATION

ALTITUDE HOLD ON
HEADING HOLD ON

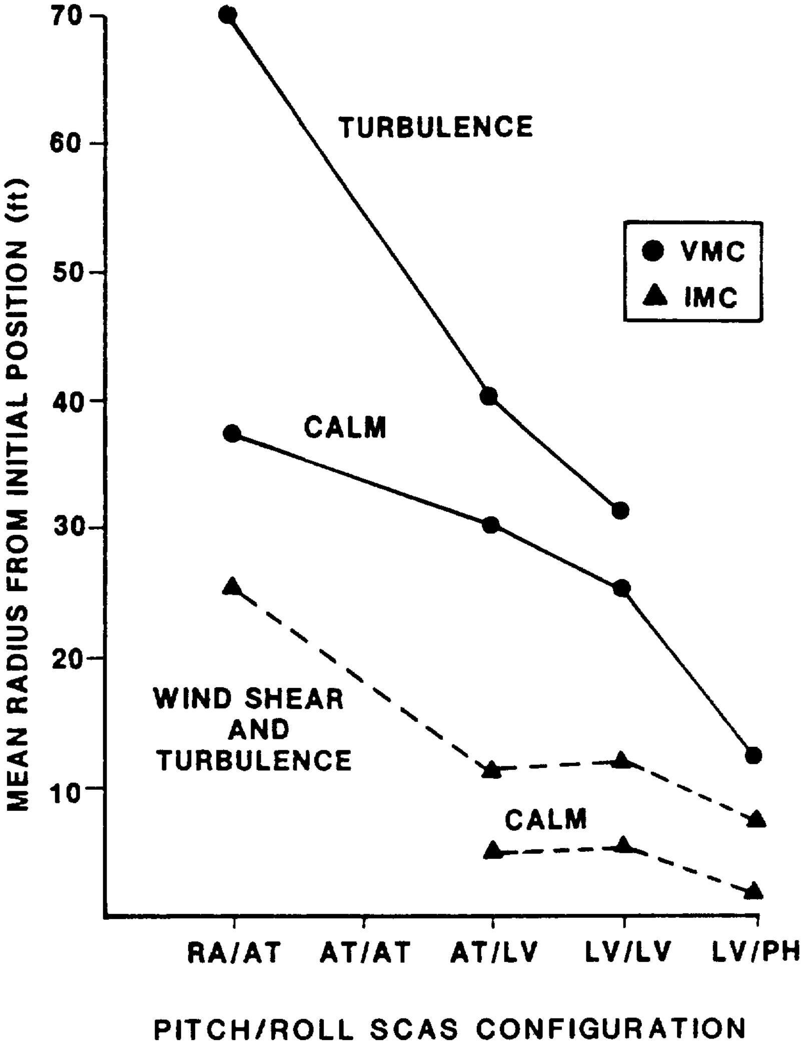

Figure 6-22

ceived the best pilot ratings (Figure 6-23). This system was preferred over the RA/AT or the AT/AT system because of improved groundspeed hold during maneuvering. The SCAS had less of an effect on pilot ratings for the 90-Knot Slalom Task under IMC.

Time history data for the 30-Knot Slalom Task with AT/LV and RA/AT systems are presented in Figures 6-24 and 6-25 respectively. As discussed, groundspeed deviations for the rate command/attitude stabilization system (RA/AT) are greater than the ground-speed deviations which occurred with an attitude command/velocity stabilization (AT/LV) system. With the AT/LV system, improved ground track and smaller variations in sideslip were maintained. Both time history cases presented for the Slalom Task were obtained with the same pilot and the (2+1+1) controller configuration under IMC.

For the 90- and 140-Knot Slalom Tasks, variations in pitch and roll command and stabilization levels showed that a hybrid SCAS configuration--AT/AS in pitch and RA/AT in roll--was much preferred over the other SCAS configurations evaluated (Figure 6-26). The requirement to hold heavy forces in a turn with a pitch and roll attitude command system (AT/AT) caused a significant degradation in pilot ratings of about 2.5 points. This SCAS configuration exhibited a severe degradation of flight path accuracy and airspeed hold, as well as a tendency toward PIO.

Automatic Turn Coordination

The effect of Automatic Turn Coordination on pilot ratings for the 90-Knot Slalom Task under VMC is shown in Figure 6-27. Data are presented as a function of controller configuration for the best pitch and roll SCAS configuration--attitude command/airspeed stabilization (AT/AS) in pitch and roll rate command/attitude stabilization (RA/AT) in roll. For all controller configurations, the automatic turn coordination system improved pilot ratings by approximately 2.0 rating points, and significantly reduced pilot workload by making the slalom maneuver a single axis stick-steering control task. Level 1 ratings were achieved with all controller configurations with the turn coordination system engaged. The lack of automatic turn coordination significantly degraded flight path performance, especially at lower AFCS command and stabilization levels.

The turn coordination system designed for this simulation used lateral acceleration feedback above 50 knots to balance the aircraft automatically in turns. The system implementation appeared to have a detrimental effect on the pilots' ability to trim the aircraft with non-zero lateral acceleration. Since lateral control introduced a turn rate command into the yaw axis, it was difficult to establish steady yaw and lateral

PILOT RATINGS FOR SLALOM TASK

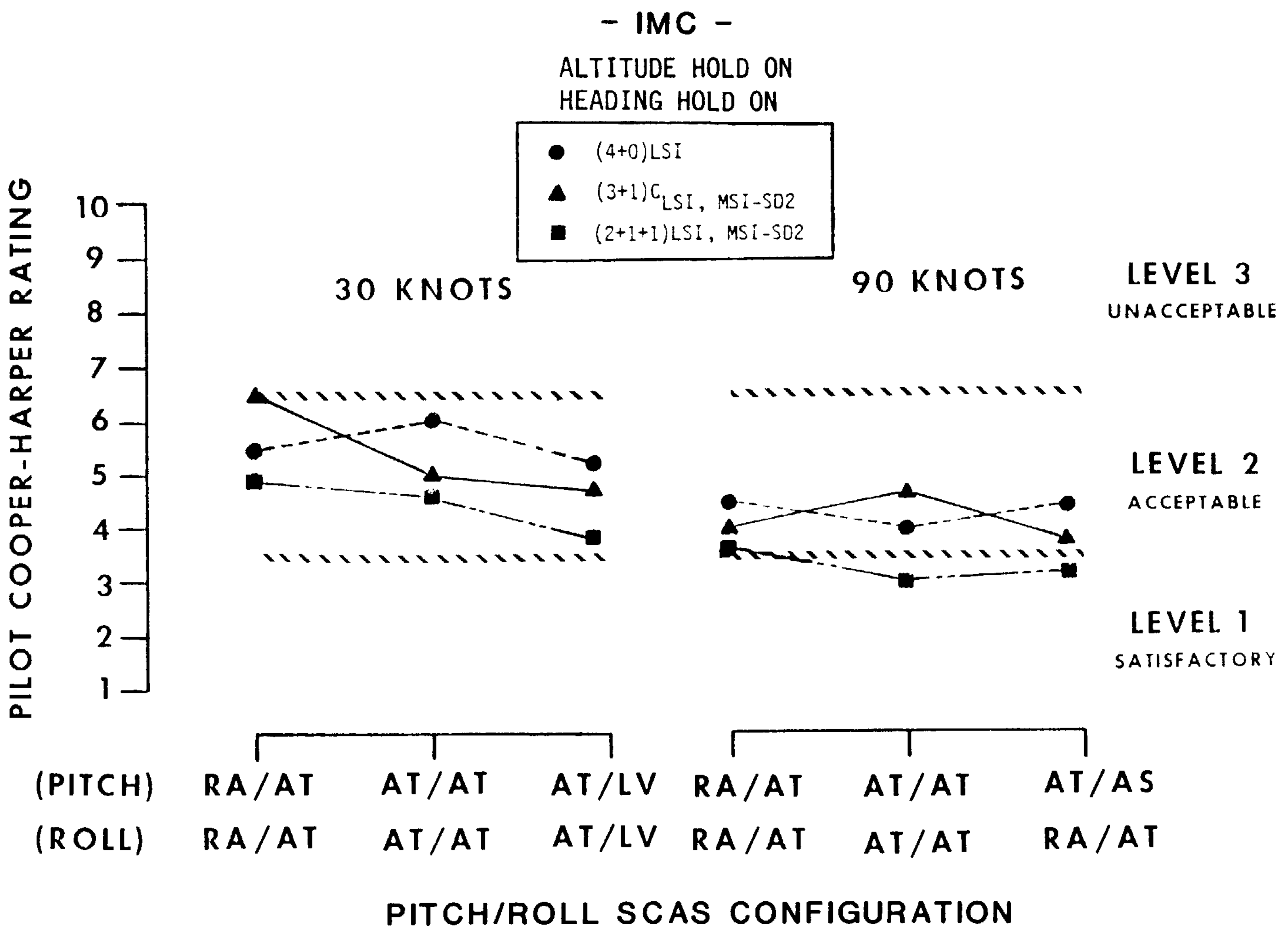

Figure 6-23

TIME HISTORY OF 30-KNOT SLALOM TASK - IMC AT/LV SYSTEM

CMD/STAB SYSTEM - AT/LV, $\dot{\psi}/\psi_H$, $\dot{h}/h_H$

CONTROLLER CONFIGURATION - (2+1+1)LSI, MSI-SD2

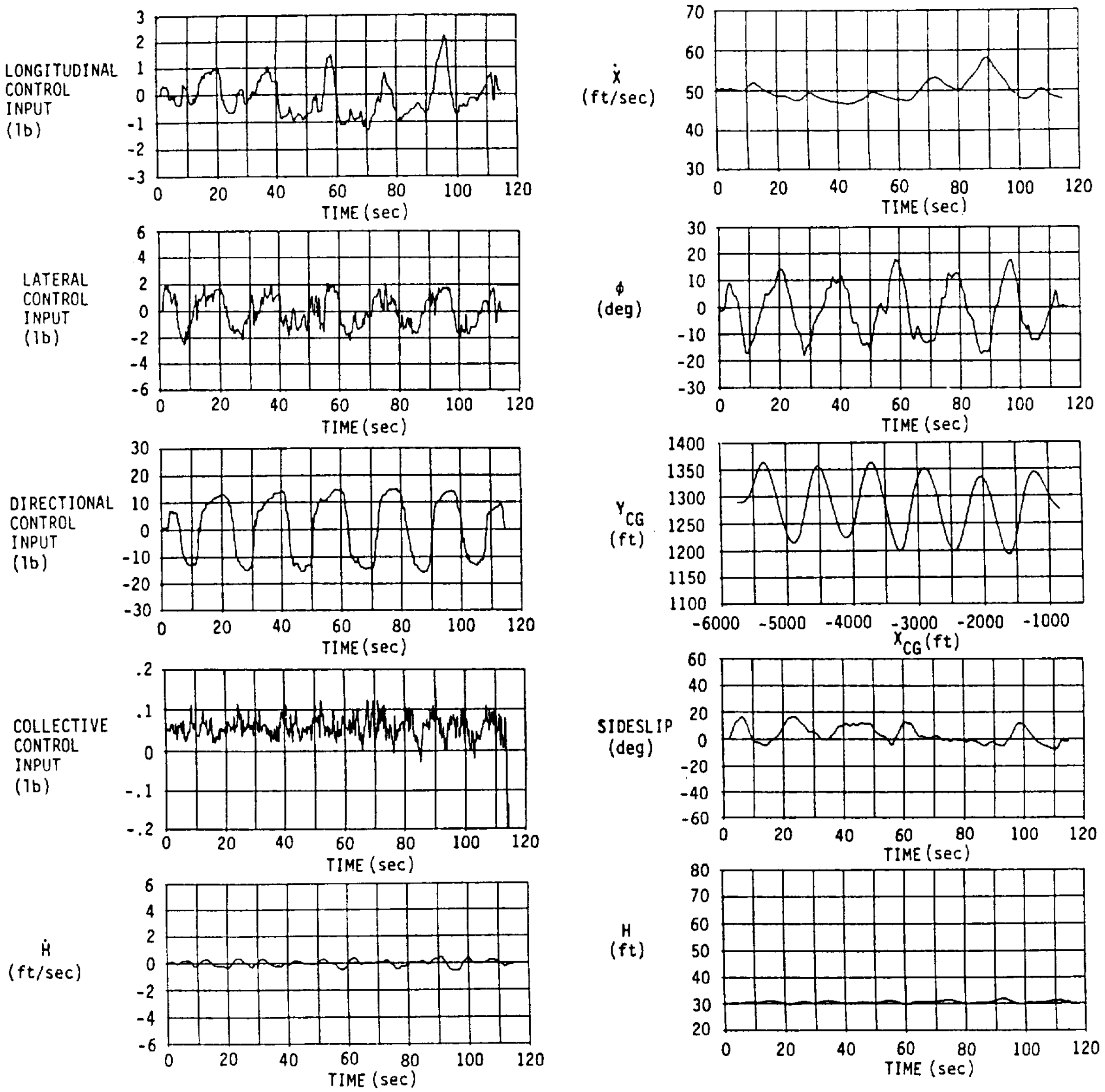

Figure 6-24

TIME HISTORY OF 30-KNOT SLALOM TASK - IMC RA/AT SYSTEM

CMD/STAB SYSTEM - RA/AT, $\dot{\psi}/\psi_H$, $\dot{h}/h_H$
CONTROLLER CONFIGURATION - (2+1+1)LSI, MSI-SD2

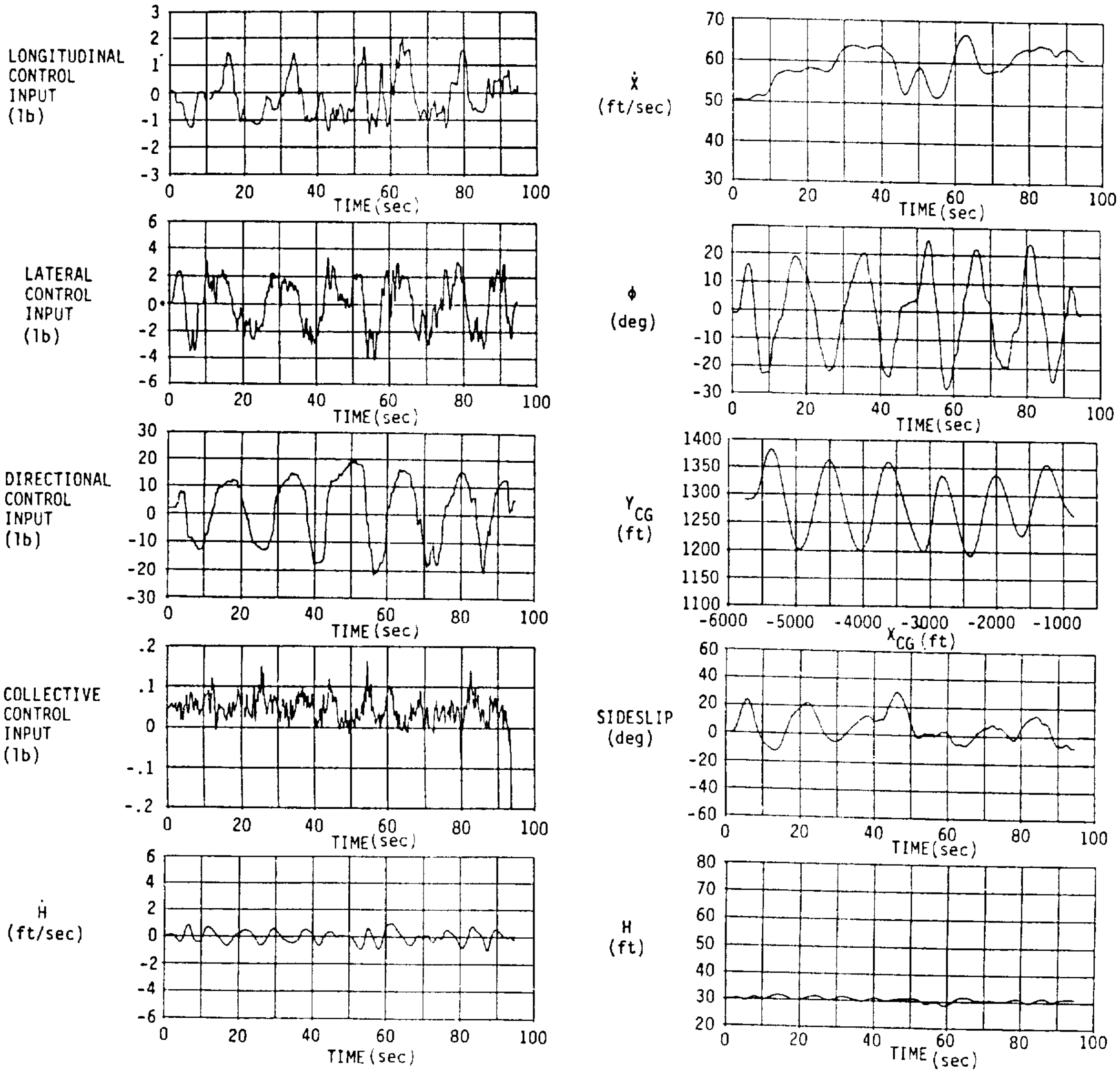

Figure 6-25

PILOT RATINGS FOR HIGH-SPEED SLALOM TASK

AUTOMATIC TURN COORDINATION

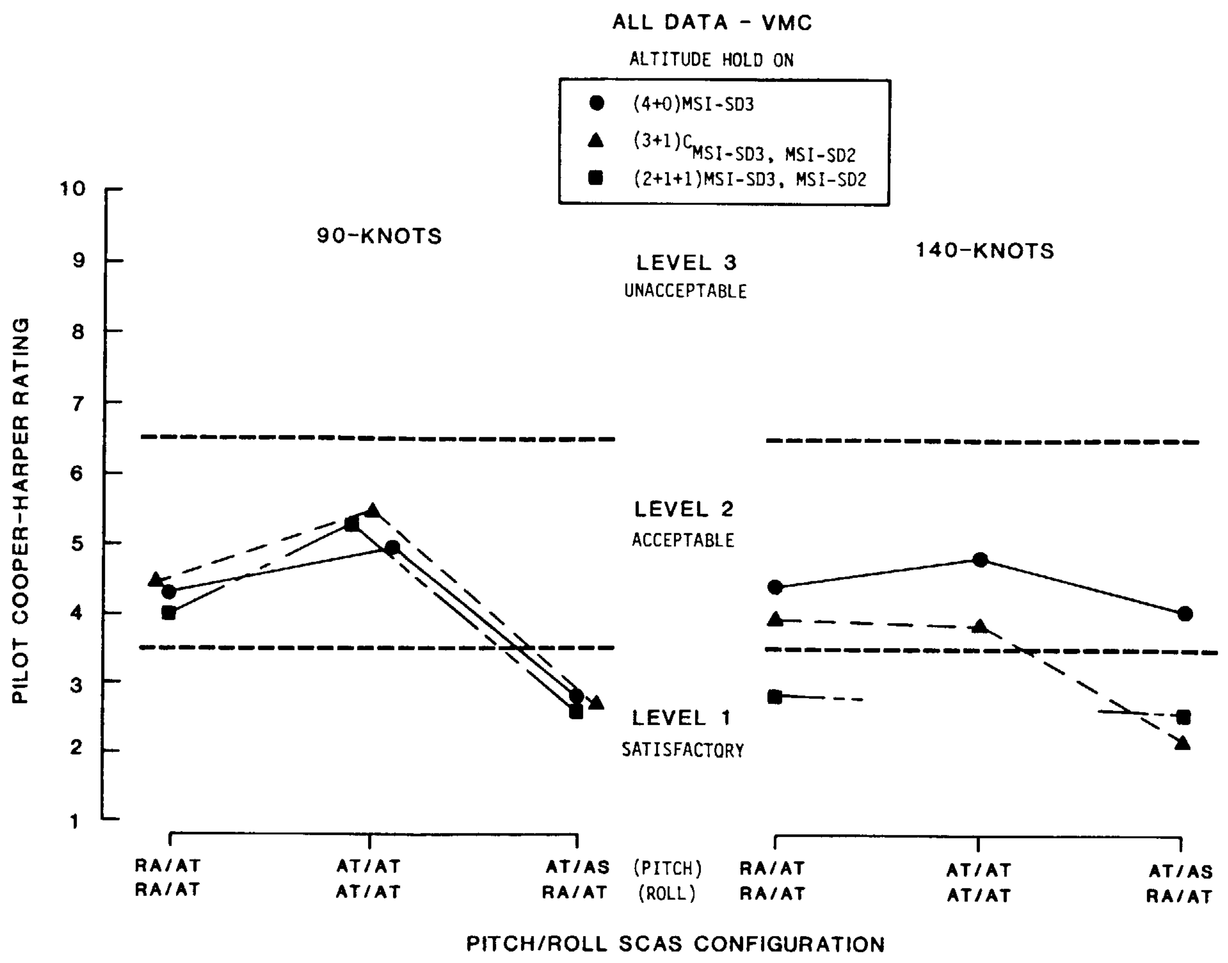

Figure 6-26

EFFECT OF AUTOMATIC TURN COORDINATION ON PILOT RATINGS

90-KNOT SLALOM TASK

ALL DATA - VMC
SCAS CONFIGURATION :
AT/AS (PITCH) ; RA/AT (ROLL)

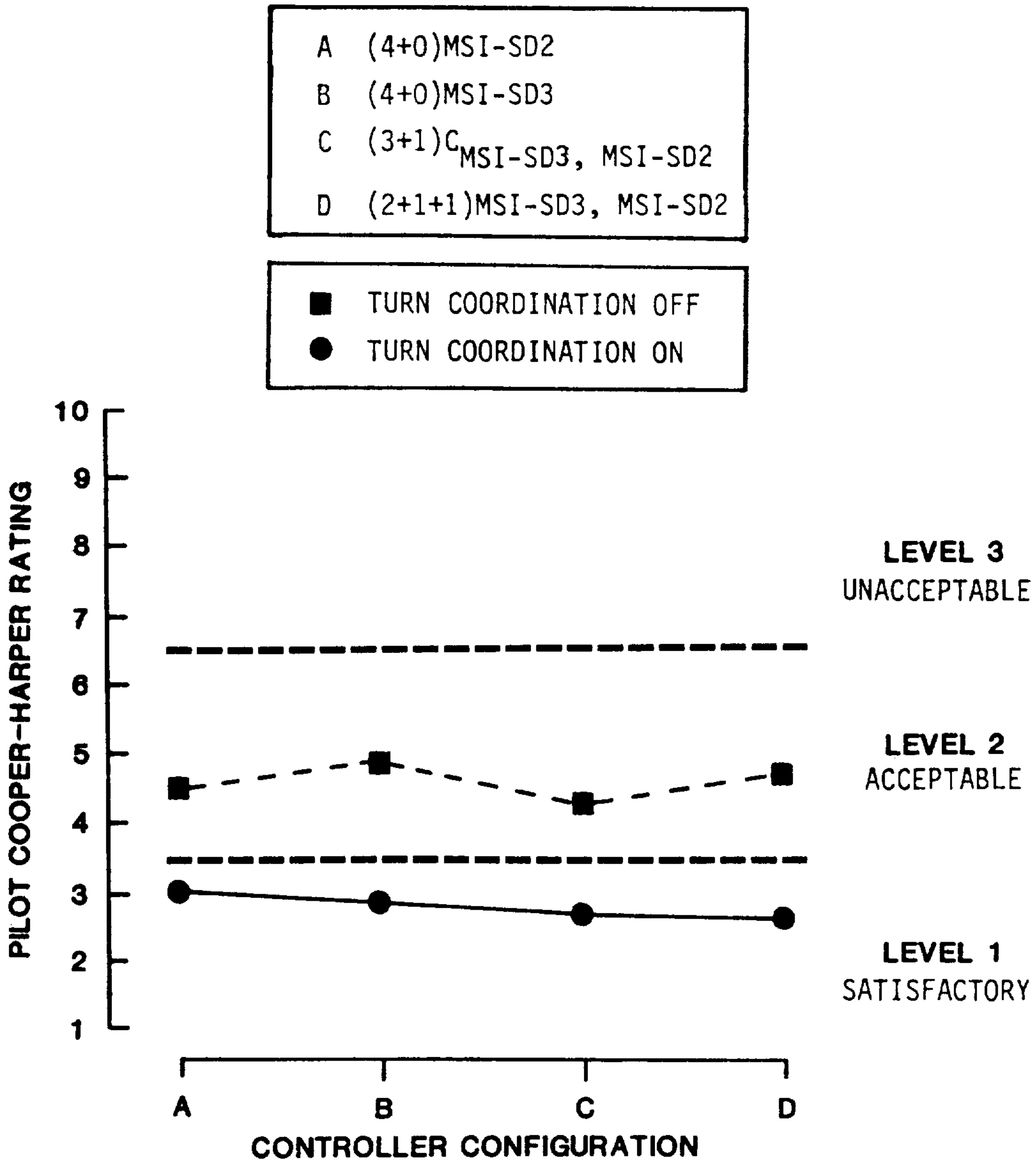

Figure 6-27

control positions required to establish an unbalanced flight condition.

Controller Configuration Effects

For both the 30- and 90-Knot IMC Slalom Tasks, the pilots preferred separated controllers [i.e., (3+1) Collective and (2+1+1)], as shown in Figure 6-23. The pilot's ability to maintain a constant airspeed and altitude was a primary measure of performance for these tasks. Pilot comments indicate that more cross-coupling occurred with the 4-axis controller and resulted in significant airspeed and altitude deviations. Overall, for both Slalom Tasks, the (2+1+1) configuration received the best pilot ratings. Pilots' comments suggest that there was more tendency to couple roll inputs into yaw with the (4+0) and (3+1) Collective configurations. The (2+1+1) configuration eliminated roll/yaw interaxis control coupling for this task.

The results of the 90-Knot and 140-Knot VMC Slalom Tasks are presented in Figure 6-26 for three primary controller configurations. At 90 knots with Turn Coordination selected, the effects of controller separation were minimal. All controller configurations received comparable pilot ratings. The 90-Knot Slalom Task was primarily a single-axis lateral stick-steering task supplemented by pitch axis modulation to control airspeed. Automatic Turn Coordination and Altitude Hold reduced the need for compensation in the yaw and vertical axes. Therefore, any advantages of separated controllers for the Slalom Task at 90 knots were diminished.

This situation did not exist at 140 knots for the Slalom Task with Automatic Turn Coordination On. The (4+0) MSI-SD3 controller exhibited degraded ratings compared to the separated controller configurations. Only Level 2 ratings were obtained with the (4+0) MSI-SD3 configuration even with the best pitch and roll SCAS configuration. Level 1 ratings were achieved for the (2+1+1) configuration with either a pitch and roll rate command system (RA/AT) or the preferred combination system (AT/AS in pitch and RA/AT in roll). The (2+1+1) configuration seemed slightly more tolerant to the higher commanded roll rates and attitudes associated with the Slalom Task at 140 knots.

6.3.3 Approach-to-Hover Tasks

These experiments evaluated the benefit of blending SCAS modes in the transition region (40 to 60 knots). The transition evaluation tasks were designed to study mode switching characteristics in both a straight and a turning deceleration and descent to hover with and without a crosswind. Generally, the effects of crosswind during the Approach-to-Hover Tasks were negligible.

Pitch/Roll SCAS Configurations

Overall, both the attitude command/attitude stabilization (AT/AT) and the hybrid SCAS (AT/AS-AT/LV, RA/AT-AT/LV) were favored over the rate command/attitude-stabilization (RA/AT) system for the Approach-to-Hover Tasks (Figure 6-28), with satisfactory ratings achieved for the straight and right-Turning Approach-to-Hover under both VMC and IMC.

The hybrid command/stabilization system (AT/AS-AT/LV, RA/AT-AT/LV) was felt to be the best system for these tasks as it eliminated the requirement to hold forces in turns as the attitude system required, while also allowing precise attitude control when attempting to achieve a hover which the rate command system lacked.

Controller Configuration Effects

Controller configuration had a significant effect on pilot ratings for the Approach-to-Hover Tasks, as presented in Figure 6-28. Separated controllers - (3+1) Collective and (2+1+1) configurations - improved VMC and IMC pilot ratings by 1.0 and 1.5 pilot rating points compared with the 4-axis controller configuration. Pilots had more difficulty with the 4-axis controller during the transition tasks because of the requirement to hold forces in the vertical axis while modulating pitch and roll control. Transfer of vertical control from the right-hand 4-axis controller to a single-axis left-hand side-stick eliminated this control problem and improved pilot ratings appreciably.

Precise modulation of airspeed while holding a steady vertical force during the descent portion of the Straight Approach-to-Hover Task with a vertical velocity command system ($\dot{h}/h_H$) was difficult with the (4+0) configuration and resulted in Level 2 pilot ratings. Pilot ratings under IMC for this task were marginal Level 2 with the (4+0) configuration and significantly degraded compared to VMC ratings of approximately 4.0. Flight path control was markedly improved and pilot workload reduced by separating the collective axis from the right hand controller, providing better axis identification and resulting in Level 1 pilot ratings of 2.0 under VMC. Level 1 ratings were also achieved under IMC with the hybrid pitch/roll SCAS configuration.

The vertical acceleration command system ($\ddot{h}/\dot{h}$) eliminated the requirement to hold steady vertical forces in a descent. However, this advantage was offset by the resultant characteristics of closed-loop vertical control. There was a consistent tendency to overcontrol which produced poor controllability and large flight path errors. Steady cross-winds had negligible effect on pilot performance and workload, regardless of the SCAS configuration.

PILOT RATINGS FOR APPROACH TO HOVER TASKS

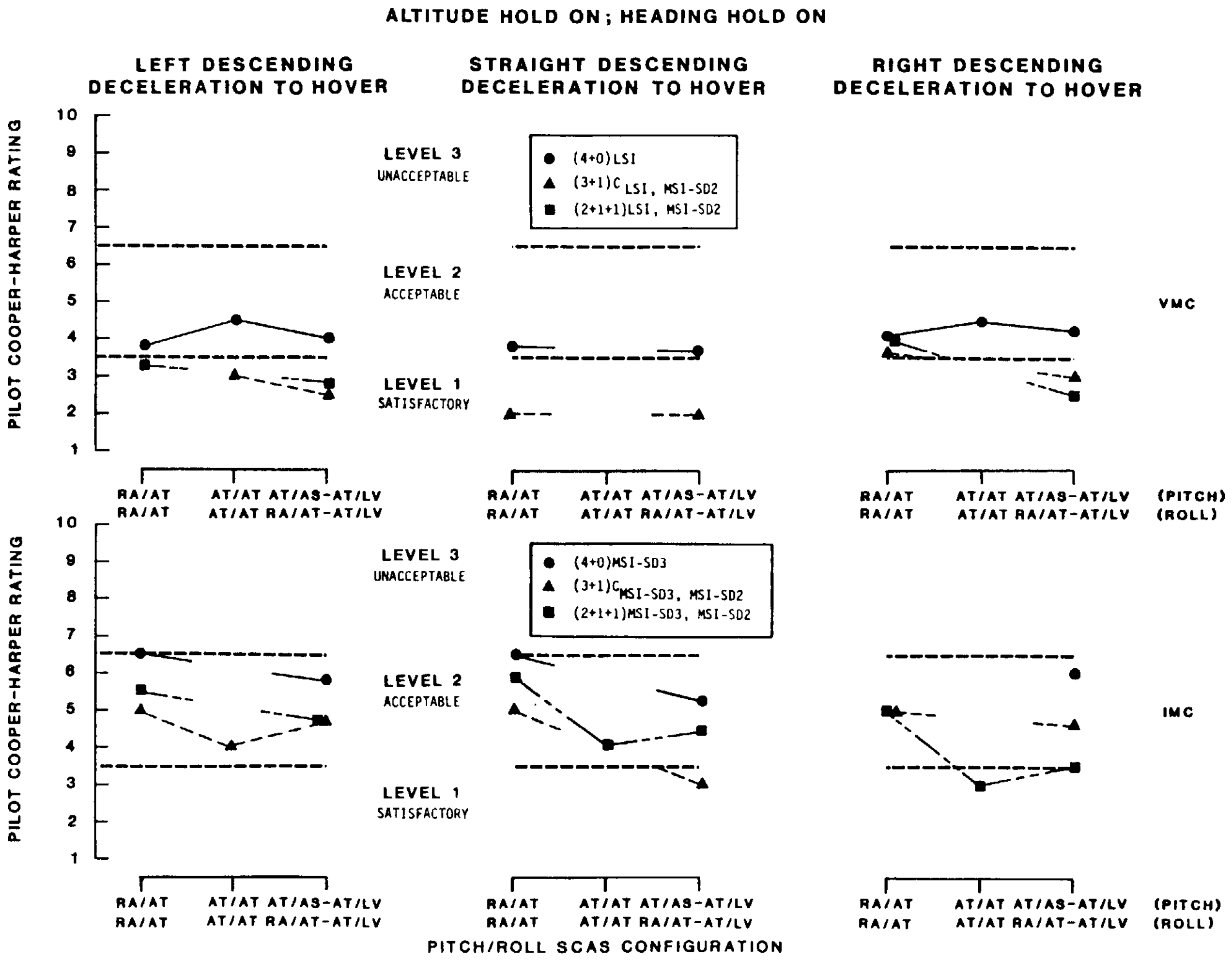

Figure 6-28

The multi-axis Turning Approach-to-Hover Task also produced degraded pilot ratings in the (4+0) configuration. Again the separation of the vertical axis with the (3+1) Collective configuration significantly reduced pilot workload by improving axis identification. During a turning descent under VMC the roll attitude command system (AT/AT) required the pilot to hold lateral control forces, as well as a vertical force, while modulating yaw and pitch control inputs. Pilot ratings for the pitch and roll rate command system (RA/AT) were slightly improved for VMC compared to the AT/AT system because the need to hold steady lateral forces was eliminated.

Anthropometric characteristics of the human wrist make it easier to turn the wrist (or twist the grip) to the left rather than the right. As a result, it was more difficult to modulate or hold right yaw control forces when coordinating a turn to the right. Experiments showed that 6.0 degrees of inboard rotation of the controller with respect to the armrest provided a more comfortable neutral position for yaw control. With this adjustment to controller orientation, pilot performance improved for right turns without degrading performance in left turns.

6.4 IMC/VMC COMPARISON

Flight under IMC with the IHADSS had a significant effect on pilot ratings for the low-speed NOE maneuvering task. Figure 6-29 compares VMC data from Phase 2A and IMC data obtained during the Phase 2B simulation for the same NOE Task. Combinations of three controller configurations and three SCAS types are compared. Average IMC pilot ratings were degraded approximately 1.5 points relative to the VMC ratings for all ASCS and controller combinations evaluated. Satisfactory handling qualities were achieved under VMC with an attitude command system, whereas handling qualities degraded to only acceptable with the same AFCS configuration for the IMC task.

The NOE Task flown under IMC was found to be the most difficult and demanding task for the evaluation pilots to perform. The IHADSS display provides a limited instantaneous field-of-view image and gives minimal rate-of-closure cues to the pilot, thereby making this task extremely difficult to perform with low levels of stability and control augmentation.

The ability to maintain horizontal ground position was used by the pilots as a measure of performance for the Bob-up Task. Under IMC this information was explicitly displayed to the pilot by the bob-up mode symbols of the IHADSS display. The benefit obtained from the extra "feedback" to the pilot provided by the IHADSS symbology is shown by the results presented on Figure 6-22. Performance of the Bob-up Task, as indicated by deviation of hover position, improved significantly under IMC with IHADSS. Not only did the position symbol aid the pilot in

COMPARISON OF IMC AND VMC PILOT RATINGS

-NOE TASK-

ALTITUDE HOLD ON
HEADING HOLD ON

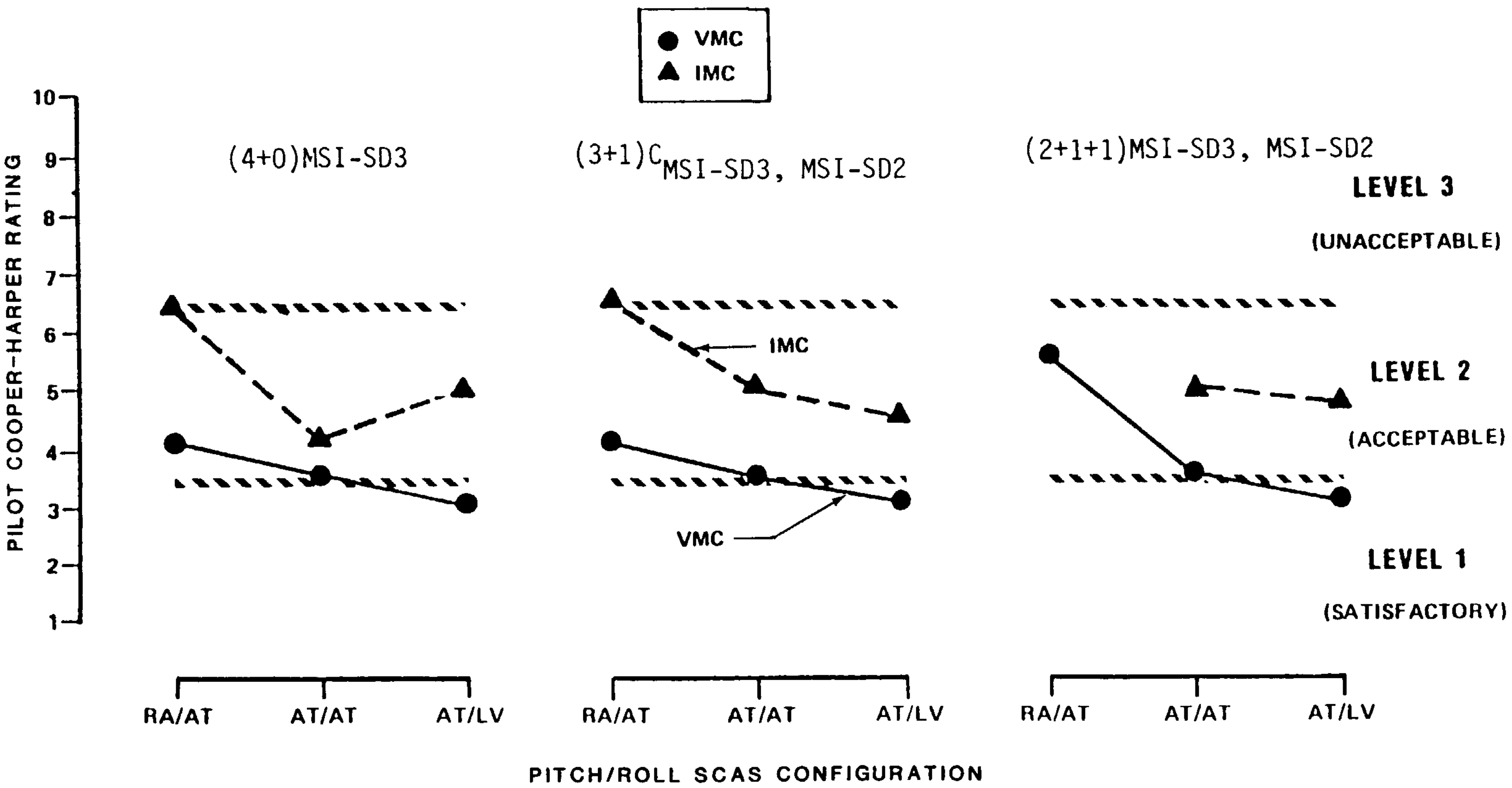

Figure 6-29

holding position, but the velocity vector served to direct him back to his initial position.

For the Approach-to-Hover Tasks (Figure 6-28), the noted degradation in pilot ratings under IMC were a result of the poor rate-of-closure cues and limited field-of-view supplied by IHADSS. During the turning Approach-to-Hover Tasks in particular, the large head movements required of the task caused the pilot to become disoriented and unable to tightly control his flight path.

7.0 SUMMARY OF PILOT EVALUATION DATA

In order to summarize task/SCAS/controller effects on pilot workload and performance under both VMC and IMC, all pilot rating data for each simulation phase were reorganized into various matrices, including:

(1) a task/SCAS matrix with all controller configuration ratings combined and averaged

(2) a controller/SCAS matrix with all task ratings combined and averaged, or

(3) a task/display matrix with all SCAS and controller configurations combined.

In addition to pilot rating data, pilot qualitative comments were recorded for each data run. All commentary was analyzed to understand the reason for each pilot rating and to identify prominent factors which influence the pilot rating for each configuration variable.

7.1 SUMMARY OF PILOT RATINGS

7.1.1 Task/Display Effects

Pilot rating data for all controller configurations were averaged for each task/SCAS combination. Figures 7-1 and 7-2 present the results of this analysis for Phase 1 and Phase 2, respectively. In addition to the effect of SCAS configuration, there was a significant effect of task on pilot ratings for IMC. The IMC display effects showed an additive degradation of pilot workload/performance as task difficulty increased. In comparison, VMC pilot ratings were predominantly affected by SCAS configuration and, except for the Precision Hover and Bob-up Tasks, where visual cues become weak, task had little effect. When comparing IMC results to VMC results obtained during Phase 1, the mean increase in pilot rating points for each task was: NOE course 2.3, 30-Knot Slalom 2.0, Acceleration/Deceleration 1.2, and Bob-up 1.3. The same comparison of data for Phase 2 shows that the mean increase in pilot rating points by task was: NOE course 1.9 - straight and Turning Approach-to-Hover 1.7, Precision Hover 0.15, and Bob-up 1.45.

Figure 7-3 presents a comparison of VMC and IMC ratings for all tasks evaluated during the Phase 2 simulation. The VMC data are from Phase 2A testing and the IMC data were generated during the Phase 2B simulation phase. Data shown are Cooper-Harper ratings averaged over all controller configurations and AFCS types evaluated for each task. As seen in Figure 7-3, the average rating did not vary significantly as a function of VMC task. However, task variation had a larger effect on pilot rating for flight under IMC with the IHADSS. The largest degradation in IMC pilot ratings occurred for the NOE Task.

SUMMARY OF TASK EFFECT ON PILOT RATINGS

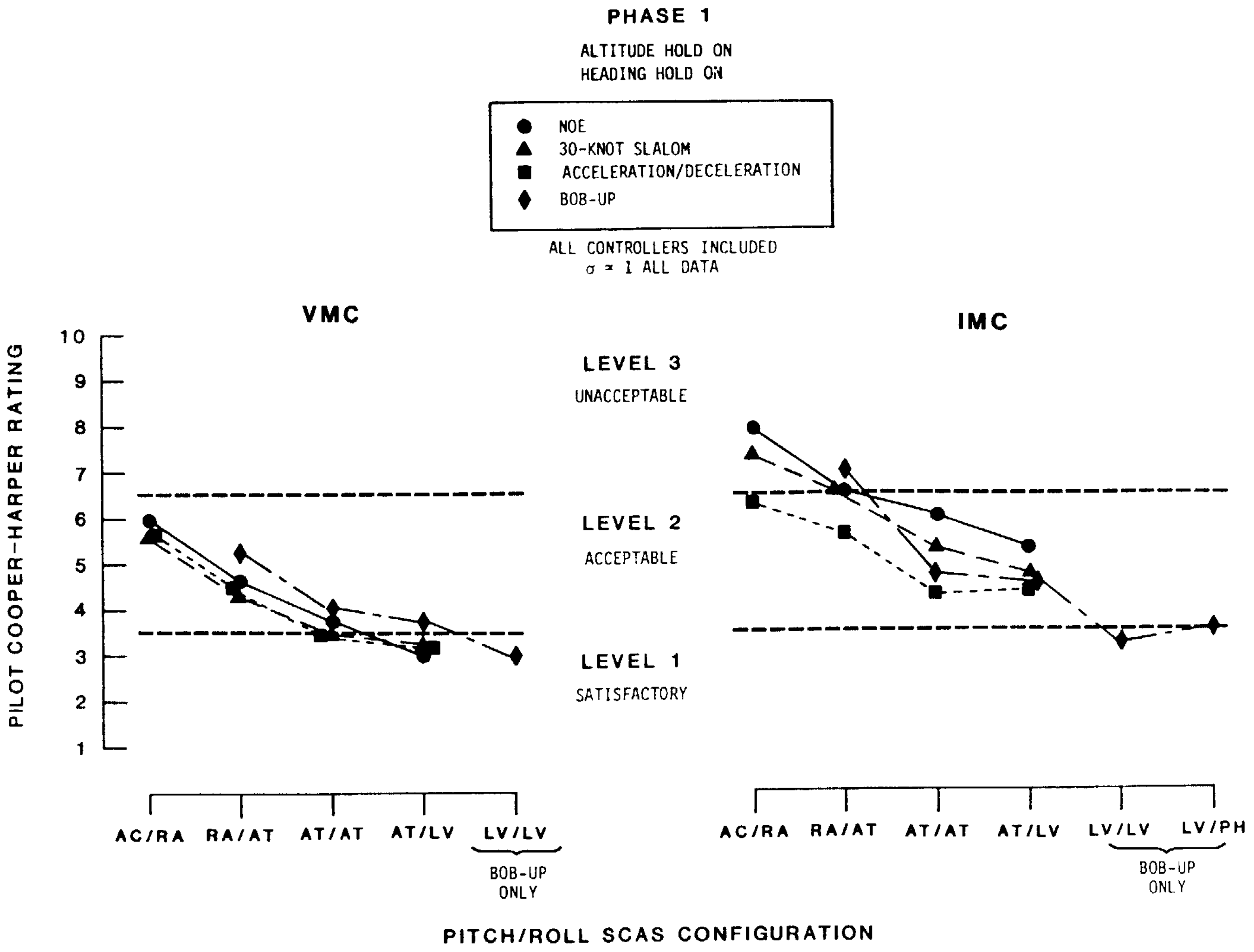

Figure 7-1

SUMMARY OF TASK EFFECT ON PILOT RATINGS

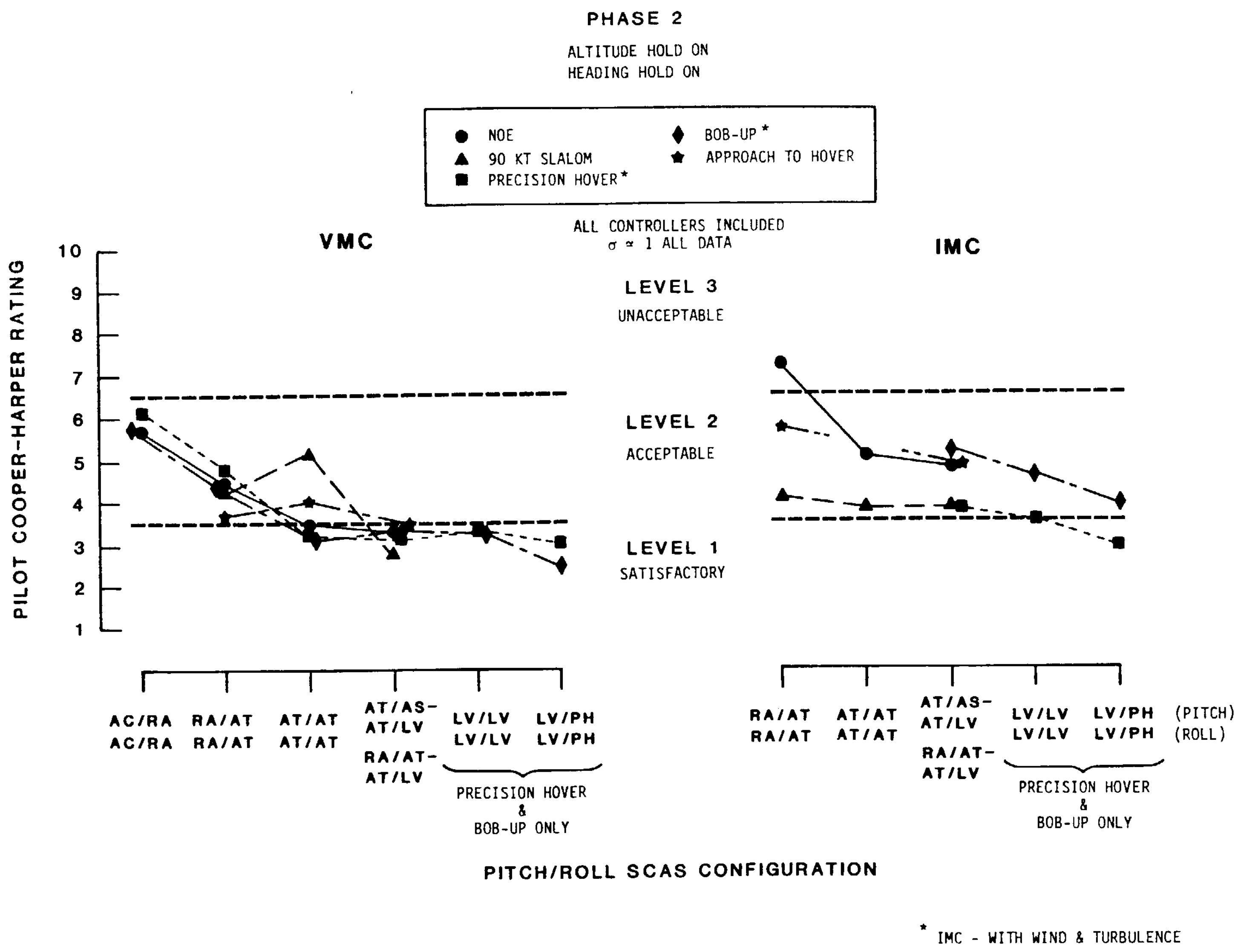

Figure 7-2

EFFECT OF TASK ON PILOT RATINGS

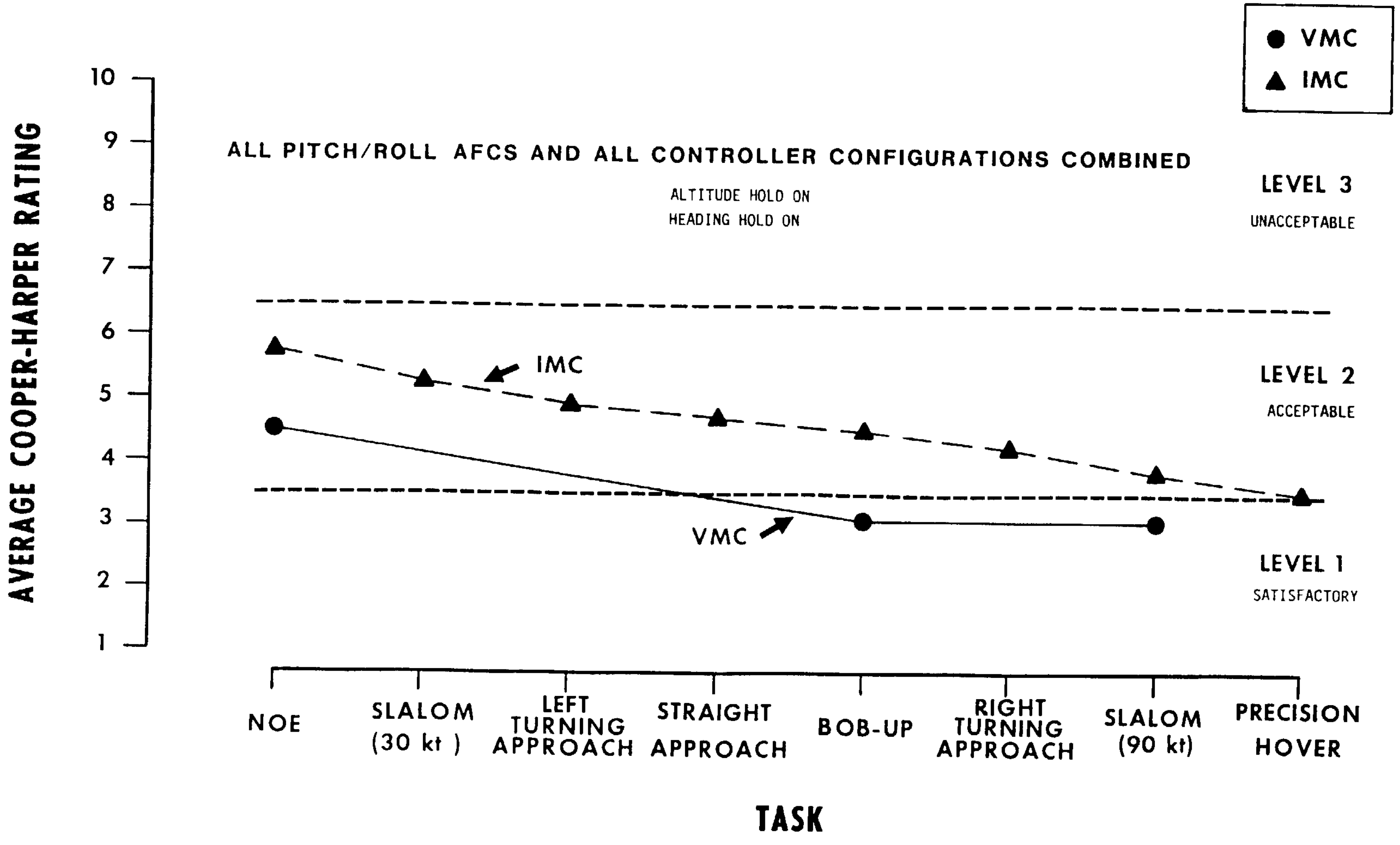

Figure 7-3

More pilot head motion was required for low speed maneuvering tasks such as the NOE, 30-Knot Slalom, and Turning Approach-to Hover Tasks. Pilot comments indicate that the rapid head movement required to monitor aircraft position and ground track caused disorientation and increased workload. For tasks in which little or no head motion is required, such as the Precision Hover and Slalom at high speed (90 knots), IMC ratings approached those for the same tasks conducted under VMC.

7.1.2 SCAS Effects

The effect of primary SCAS configuration on pilot ratings for the 30-Knot Slalom, Acceleration/Deceleration, and NOE Tasks of Phase 1 is summarized in Figure 7-4. Pilot ratings from the three tasks were combined into a single primary SCAS/controller matrix, thereby tending to average out the effect of task. A comparison of VMC with IMC is also shown. The average degradation of IMC ratings compared to VMC ratings for all SCAS configurations is 1.8 on the Cooper-Harper rating scale. For each SCAS configuration, the range of pilot ratings from the best to worse controller configuration was an average of one and one-half rating points for both IMC and VMC.

Figure 7-1 shows that an acceleration command/rate stabilization system (AC/RA) exhibited Level 3 ratings for the IMC tasks, and the addition of attitude stabilization with a rate command response system (RA/AT) received marginal Level 2 ratings. With the same level of attitude stabilization, an attitude command system (AT/AT) improved both IMC and VMC pilot ratings by over one rating point. When velocity stabilization was combined with an attitude command system, pilot ratings for the maneuvering tasks improved an average of half a rating point for IMC and VMC.

A similar analysis of Phase 2 pilot rating data for forward flight maneuvering tasks -- NOE, 90- and 140-Knot Slalom and Approach-to-Hover Tasks -- was performed. The comparison of VMC with IMC results for Phase 2 is presented in Figure 7-5. IMC ratings were degraded 1.5 rating points on the average for all SCAS configurations. SCAS configuration effects are identical to the results noted for Phase 1. That is, a rate command/attitude stabilization system (RA/AT) received marginal Level 2 ratings under IMC. Best ratings were achieved for the forward flight/transition tasks with a hybrid SCAS system in pitch and roll -- pitch attitude command/airspeed hold and roll rate command/attitude stabilization in forward flight; and attitude command/ground-speed stabilization in pitch and roll for low speed flight.

A summary of primary SCAS effects from Phase 2 data is presented in Figure 7-6. These data were generated by combining all controller configurations and tasks in a single SCAS/display matrix. Pilot rating data for each controller configuration were weighted equally; that is, an average of all ratings for

SUMMARY OF PRIMARY SCAS/CONTROLLER EFFECTS

PHASE 1 DATA

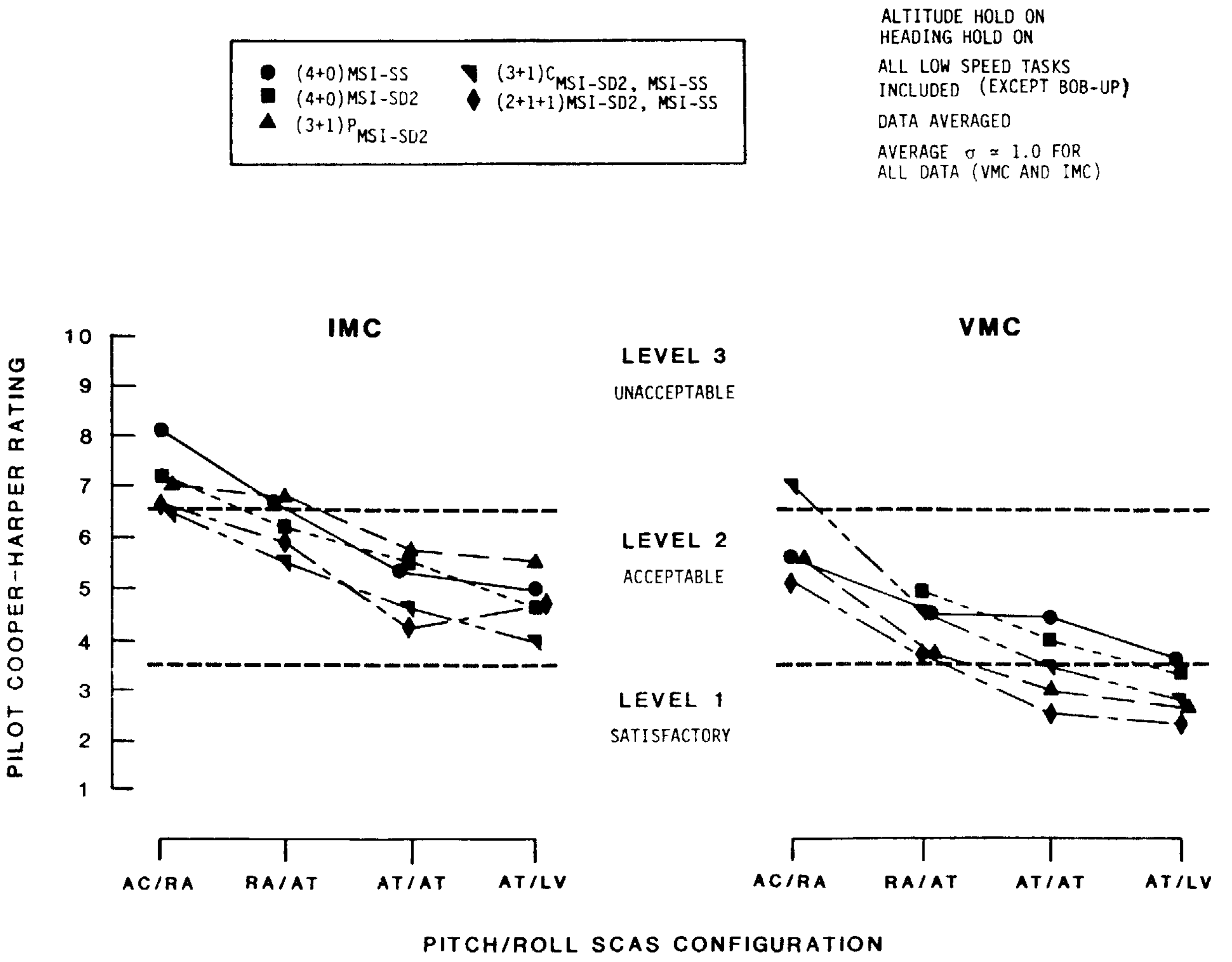

Figure 7-4

SUMMARY OF PRIMARY SCAS/CONTROLLER EFFECTS

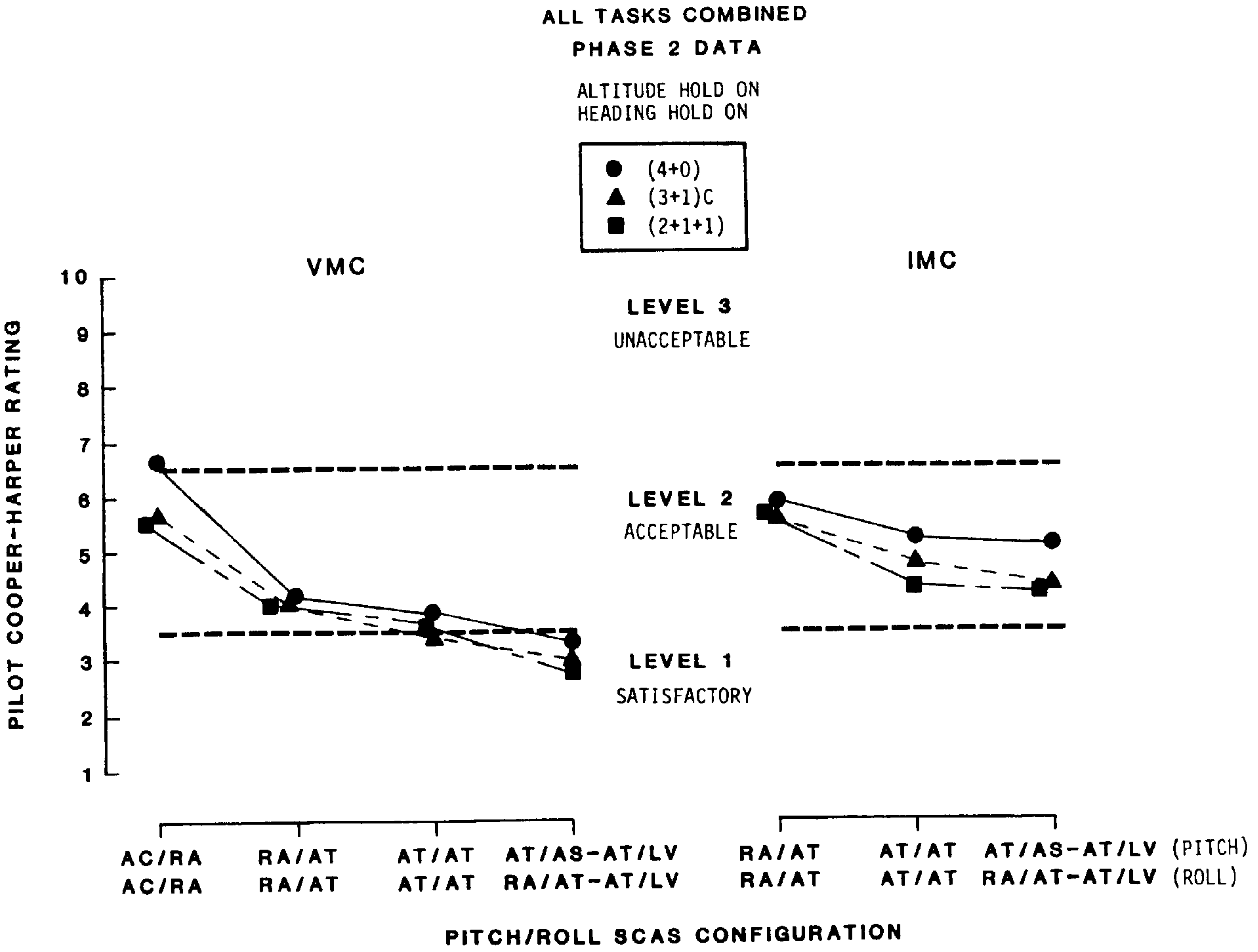

Figure 7-5

SUMMARY OF PRIMARY SCAS CONFIGURATION ON PILOT RATINGS

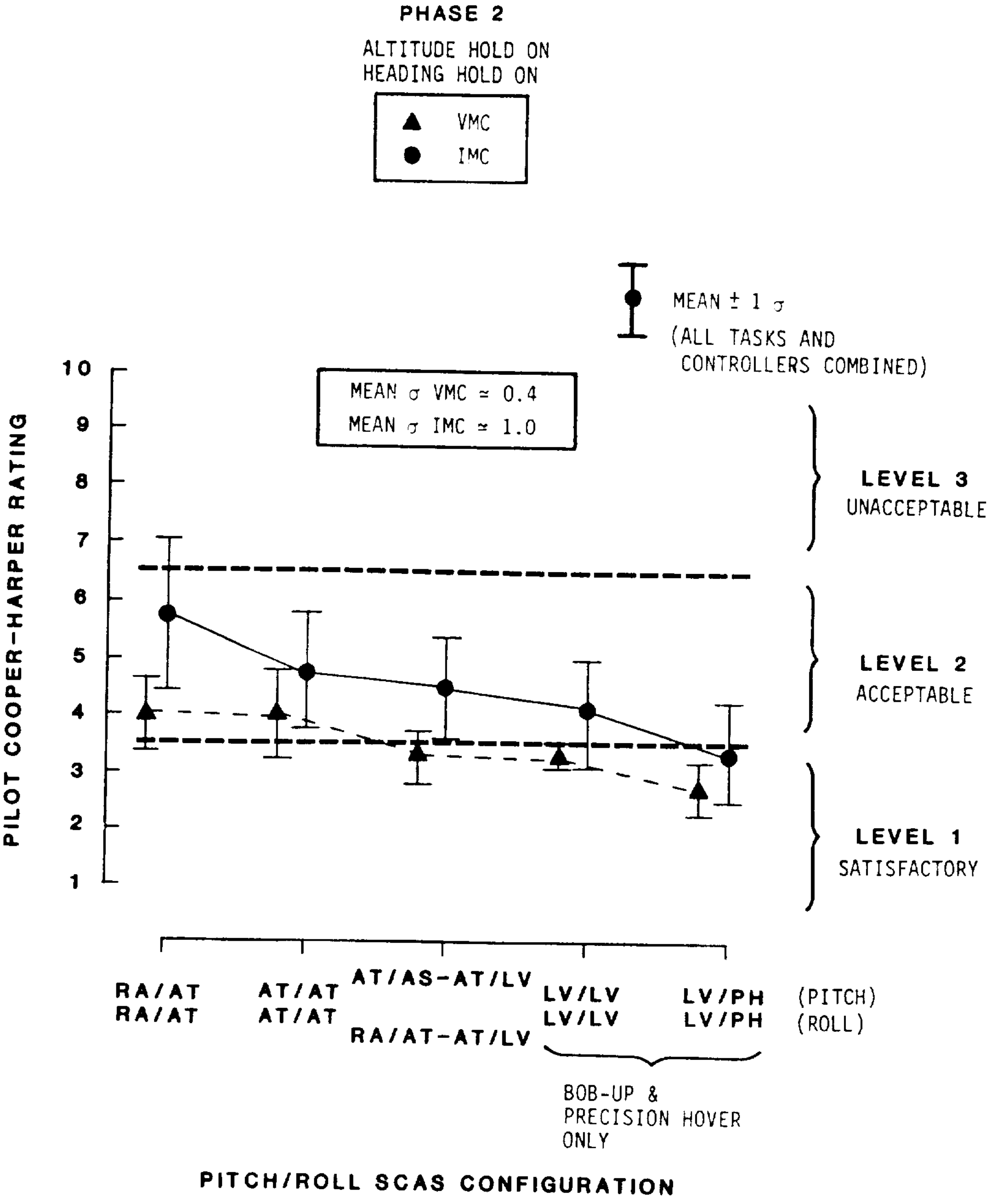

Figure 7-6

each controller configuration was first determined for each element in the SCAS matrix before the final mean rating for all controllers/task combinations was calculated.

As indicated in Figure 7-6, satisfactory pilot ratings were achieved consistently only under IMC with the LV/PH system for the Precision Hover and Bob-up Tasks. Although receiving, on the average, only adequate ratings, the hybrid longitudinal and lateral AFCS was preferred for the IMC maneuvering tasks over all AFCS configurations investigated. The longitudinal and lateral RA/AT system yielded both marginally adequate handling qualities under IMC, when averaged over all tasks and controller configurations, and the widest dispersion of pilot ratings.

7.1.3 Controller Effects

Based on average pilot ratings from Figures 5-9 through 5-12, a ranking of controller configurations was determined for each task as shown in Table 7-1. Each task was weighted equally to obtain an overall IMC and VMC ranking for each controller configuration.

The (3+1) Collective controller configuration provided the best overall pilot ratings for all IMC tasks. A tendency to cross-couple directional control into roll was observed during coordinated lateral-directional turn maneuvers, particularly during initial evaluations. However, this cross-coupling tendency diminished quickly and pilot adjustment to yaw control on the side-stick was easily made.

Pilot ratings for the (3+1) Pedal configuration were more degraded than other controller configurations for lateral-directional maneuvering tasks under IMC (Figure 7-4). However, for the VMC tasks, the (3+1) Pedal ratings ranked in the middle and received improved ratings when compared to the 4-axis configuration.

The (2+1+1) controller configuration in general achieved good pilot ratings for all three IMC low-speed maneuvering tasks. For the IMC Bob-up Task (Figure 5-10), the (2+1+1) configuration ranked better than the 4+0 but worse than the (3+1) configurations. The (2+1+1) configuration achieved the best ratings for all the VMC maneuvering tasks.

The separated controller configurations were favored overall during Phase 2 as well as indicated by Table 7-2. Both the (2+1+1) and (3+1) Collective configurations were found for all tasks. Of the 4-axis controllers evaluated, the MSI-SD3 or the LSI (both with deflection in all axes) were the clear favorites. Pilot comments reiterate those presented from Phase 1.

CONTROLLER CONFIGURATION RANKINGS

FROM PHASE 1 SIMULATIONS

DISPLAY	**CONTROLLER CONFIGURATION**	**RANKING BY TASK**				**OVERALL RANKING (ALL TASKS)**
		ACCEL/DECEL	SLALOM	NOE	BOB-UP	
IMC	(4+0) MSI-SS	3	4	5	4	5
	(4+0) MSI-SD2	4	3	4	4	3
	(3+1) P	5	5	3	2	3
	(3+1) C	1	1	1	1	1
	(2+1+1)	2	1	1	3	2
VMC	(4+0) MSI-SS	5	5	4	DATA NOT AVAILABLE FOR ALL CONTROLLER CONFIGURATIONS	5
	(4+0) MSI-SD2	4	4	5		4
	(3+1) P	2	3	1		2
	(3+1) C	2	2	3		3
	(2+1+1)	1	1	1		1

Table 7-1

CONTROLLER CONFIGURATION RANKINGS

FROM PHASE 2 SIMULATIONS

DISPLAY	CONTROLLER CONFIGURATION	RANK BY TASK									OVERALL RANKING
		LOW SPEED TASKS				TRANSITION TASKS			HIGH SPEED TASKS		
		PRECISION HOVER	30-KT SLALOM	NOE	BOB-UP	LEFT-TURNING-DESCENDING-DECEL. APPROACH TO HOVER	STRAIGHT DESCENDING-DECEL. APPROACH TO HOVER	RIGHT-TURNING-DECENDING-DECEL. APPROACH TO HOVER	90-KNOT SLALOM	140-KNOT SLALOM	
IMC	(4+0)LSI	2	3	2	3	3	3	3	3	NO DATA UNDER IMC	3
	$(3+1)C_{\text{LSI}}$, MSI-SD2	1	2	1	1	1	1	2	2		1
	(2+1+1)LSI, MSI-SD2	3	1	3	2	2	2	1	1		2
VMC	(4+0)MSI-SD1	6	NO DATA UNDER VMC	6	5	-	-	-	-	-	6
	(4+0)MSI-SD2	5		5	6	-	-	-	3	-	5
	(4+0)MSI-SD3	4		3	3	3	2	3	2	3	3
	$(3+1)C_{\text{MSI-SD3,-SD1}}$	3		2	4	-	-	-	-	-	4
	$(3+1)C_{\text{MSI-SD3,-SD2}}$	2		1	1	1	1	2	4	2	2
	(2+1+1)MSI-SD3,-SD2	1		4	2	2	-	1	1	1	1

Table 7-2

7.2 PILOT COMMENTARY

All pilot comments were analyzed to determine the primary qualitative characteristics of each SCAS or controller configuration that influenced overall pilot ratings. Advantages and disadvantages of each SCAS or controller configuration element are summarized in Tables 7-3 through 7-7.

PILOT COMMENTS ON CONTROLLERS

MSI-SD3	MSI-SD2	MSI-SS
● BEST CONTROLLER DESIGN EVALUATED ● YAW TRAVEL EXCEEDED HAND-WRIST MOTION CAPABILITY ● MECHANICAL DISCREPANCIES IN LONG AXIS DEGRADED FORCE/ DISPLACEMENT UNIFORMITY ● IMPROVEMENT OVER MSI-SS AND MSI-SD2 FOR SAS OFF FLIGHT, AND FOR PRECISION TASKS ● LARGE MOTION IN EACH AXIS PROVIDED GOOD DEFINITION OF AXIS COMMANDED	● POOR FORCE MODULATION IN YAW AND COLLECTIVE ● HARMONIZATION POOR ● MARGINAL TACTILE CUES DURING HIGH FREQUENCY MANIPULATION ● STRAIGHT LINES ON GRIP PROVIDED GOOD AIRCRAFT TO CONTROLLER AXIS CORRELATION	● FORCE MODULATION DIFFICULT ESPECIALLY DURING LARGE AMPLITUDE MANEUVERS ● POOR TACTILE FEEDBACK, DO NOT FEEL TIGHT IN LOOP, ESPECIALLY IN HIGH FREQUENCY TASKS ● SUSCEPTIBLE TO P1O ● INTOLERABLE TO PILOT-TO-PILOT VARIANCES ● STRAIGHT LINES ON GRIP PROVIDED GOOD AIRCRAFT TO CONTROLLER AXIS CORRELATION

NOTE: (1) IN ALL CONTROLLERS PITCH-YAW ORIENTATION IS CRITICAL IN ALLEVIATING FATIGUE.

(2) A MEANS OF ESTABLISHING A CONTROLLER AXIS-AIRFRAME AXIS REFERENCE IS NECESSARY (i.e., PARALLEL EDGES ON CONTROLLER).

Table 7-3

PILOT COMMENTS ON CONTROLLER CONFIGURATIONS

(4+0)	**(3+1) P**
• MULTI-AXIS MANEUVERING CONFUSING/IMPRECISE. • GOOD HEADING ACQUISITION CHARACTERISTICS IN HOVERING TURNS. • VERY PRONE TO INADVERTENT INPUTS AND X COUPLING, ESPECIALLY IN TURBULENCE. • TENDENCY TO CONTROL AXES INDIVIDUALLY.	• IMPRECISE LOW SPEED YAW CONTROL • CONSIDERABLE ANTHROPOMETRIC COUPLING (TORSO - ROCKING) • POOR ROLL YAW CONTROL PRECISION DURING MANUAL TURN CO-ORD AT LOW SPEEDS.
(3+1) C	**(2+1+1)**
• BEST CONFIGURATION FOR MANUAL TURN CO-ORDINATION AT LOW SPEED (CONST. SPEED) • MINOR ANTHROPOMETRIC PROBLEMS (UPPER TORSO - ROCKING) • REASONABLE AXIS IDENTIFICATION SAS OFF. • MINOR INADVERTENT INPUTS (AXIS MIS-IDENTIFICATION) • SLIGHT TENDENCY TO SEPARATE LAT-DIR MULTI-AXIS TASKS (DESCENDING DECELERATING TURN)	• LOW SPEED MANUAL TURN CO-ORDINATION NOT AS GOOD AS (3+1)c AND (4+0) • CONFIGURATION LEAST SUSCEPTIBLE TO INADVERTENT INPUTS • GOOD AXIS IDENTIFICATION (IMPORTANT AFCS OFF) • EFFECTS OF AFCS DEGRADATION NOT AS APPARENT IN THIS CONFIGURATION.

NOTE: 1) CONTROLLER ORIENTATION VERY CRITICAL.
- WRIST FATIGUE AFTER EXTENDED FLIGHT PERIODS, MAKING CONTROL RESPONSE APPEAR SLUGGISH.

2) SIDESLIP CONTROL PRECISION VERY POOR. ESPECIALLY POOR WHEN CONTROLLED IN CONJUNCTION WITH VERTICAL USING (4+0) OR (3+1)p.

Table 7-4

PILOT COMMENTS ON PRIMARY SCAS CONFIGURATIONS

AFCS OFF	AC/RA	RA/AT
• UNCONTROLLABLE WITH (4+0)MSI-SS & (4+0)MSI-SD2 IN MODERATE MANEUVERS • EXTREME PILOT WORKLOAD • CONTROLLABLE WITH SEPARATED CONTROLS IN ALL FLIGHT REGIMES (2+1+1) BETTER THAN (3+1)C	• EXTREMELY POOR FLIGHT PATH AND AIRSPEED CONTROL • PILOT WORKLOAD VERY HIGH (NO TIME FOR SECONDARY TASKS) • TENDENCY TO CONTROL LIKE ON-OFF SYSTEM. (VERY DIFFICULT TO MODULATE ATTITUDES)	• AIRSPEED AND FLIGHT PATH CONTROL MARGINALLY ACCEPTABLE • PILOT WORKLOAD & ATTENTION TO CONTROL HIGH: - θ CONTROL DIFFICULT - ATTENTION TO ROLL CONTROL TOO HIGH DURING LOW SPEED FLIGHT. ROLL RATE CONTROL PREFERRED AT HIGH SPEED.

AT/AT	AT/LV-AT/AS (PITCH) AT/LV-RA/AT (ROLL)
• AIRSPEED, FLIGHT PATH AND LOW SPEED TURN CO-ORDINATION SATISFACTORY BUT DEGRADED OVER AT/LV	• PRECISE FLIGHT PATH AND AIRSPEED CONTROL (G/S SWITCH TO A/S AT HIGHER FORWARD SPEEDS) • PILOT WORKLOAD FOR FLIGHT PATH AND SPEED CONTROL WAS LOW • CONSIDERABLE TIME AVAILABLE FOR PILOT TO ACCOMPLISH SECONDARY TASKS • LATERAL CONTROL COMMAND SWITCHING FROM AT/LV TO RA/AT AT HIGH SPEED WAS PREFERRED

Table 7-5

PILOT COMMENTS ON SECONDARY SCAS CONFIGURATIONS

YAW ACCELERATION CMD	YAW RATE COMMAND	TURN COORDINATION
● VERY DIFFICULT TO ACHIEVE DESIRED RATE. - MULTIPLE INPUTS REQUIRED TO ACHIEVE DESIRED HEADING OR YAW RATE ● YAW CONTROL, ESPECIALLY YAW REVERSALS, LACKED PRECISION. ● APPARENT AIRCRAFT YAW INERTIA INCREASED.	● CAN PRECISELY MODULATE HEADING TO ACHIEVE POSITION IN DEADBEAT FASHION. ● LOW WORKLOAD.	● EXCELLENT AT ALL SPEEDS. ● CONSIDERABLY REDUCED PILOT WORKLOADS. ● TURNS BECAME ESSENTIALLY A SINGLE AXIS STICK STEERING TASK. ● COMPLICATED & DEGRADED CONTROL OF SIDESLIPPED FLIGHT, i.e. LATERAL CONTROL ALWAYS EFFECTS YAW CONTROL, SINCE TURN COORDINATION IS A FULL TIME FUNCTION.

VERTICAL ACCELERATION CMD	VERTICAL RATE COMMAND
● VERTICAL CONTROL STEPPY WITH MULTIPLE REVERSALS. ● DIFFICULT TO MODULATE VERTICAL RATE PRECISELY. ● WORKLOAD AND PILOT ATTENTION HIGH FOR MONITORING CHANGES IN HEIGHT.	● CAN PRECISELY MODULATE HEIGHT. ● DEADBEAT RESPONSE. ● LOW WORKLOAD.

Table 7-6

PILOT COMMENTS

OTHER FACTORS

RESPONSE SHAPING	WIND	TURBULENCE
• SATISFACTORY FOR SMALL AMPLITUDE MANEUVERS. • REQUIRES FURTHER OPTIMIZATION FOR LARGE AMPLITUDE MANEUVERS.	• WINDS COMPLICATED TASKS, AS STABILITY LEVELS DECREASED.	• IN (4+0) CONFIGURATION MOD. TURBULENCE INDUCED LATERAL BODY ACCELERATIONS WHICH CAUSED INADVERTENT LATERAL COMMAND INPUTS. • SEPARATION OF CONTROLLERS REDUCED PROBLEM SEVERITY.

Table 7-7

8.0 CONCLUSIONS

Piloted simulation investigations were conducted as part of the Advanced Cockpit Controls/Advanced Flight Control System (ACC/AFCS) element of the Army's ADOCS program. The effects of variations in side-stick controller configuration and stability and control augmentation characteristics on scout/attack helicopter handling qualities were evaluated using flight simulation facilities at Boeing Vertol and NASA-Ames. Low speed, transition, and forward flight mission tasks were performed under both day visual meteorological conditions (VMC) and night-time instrument meteorological conditions (IMC) using a visually coupled helmet-mounted display.

Conclusions from these investigations are summarized according to major elements of the simulation study, including side-stick controller design, controller configuration, SCAS design, and IMC display effects.

8.1 SIDE-STICK CONTROLLER DESIGN

A 4-axis controller with small-deflection in all axes was preferred over a 4-axis stiff-stick design, or a design having small-deflection in only the pitch and roll axes. Small-deflection in each axis of the controller provided better control harmony which improved the pilot's ability to modulate single-axis forces and enhanced control precision for high-gain tasks such as the Precision Hover. In high workload situations, there was less tendency with a limited-deflection controller to over-control and/or cross-couple control inputs.

Pilot ratings with a deflection controller are less sensitive to variations in control response/force gradient. As a result, it would be easier to design acceptable control response characteristics for a wider range of pilot preferences if a small-deflection device were implemented.

8.2 CONTROLLER CONFIGURATION

4-Axis Controller

With a high level of stability and control augmentation, satisfactory handling qualities were achieved for the low-speed tasks investigated using the preferred small-deflection 4-axis controller. However, the 4-axis configuration exhibited degraded pilot ratings compared to separated controller configurations for:

- Multi-axis control tasks, such as Precision Hover, Decelerating Turning Approach-to-Hover, and the High-Speed Slalom
- Reduced levels of stability and control augmentation

PAGE 142 INTENTIONALLY BLANK

PRECEDING PAGE BLANK NOT FILMED

Separated Controller Configurations

The separated vertical controller configurations -- (3+1) Collective and (2+1+1) -- achieved similar overall pilot ratings which were generally improved compared to the integrated 4-axis controller configurations for the lower levels of stability and control augmentation investigated. Either separated vertical controller configuration was preferred for the high speed slalom maneuver and the descending decelerating approach-to-hover task. Separation of the vertical controller provided the following significant advantages for VMC or IMC terrain flight:

- o Elimination of unintentional cross-axis coupling, especially vertical-to-pitch/roll coupling.
- o Reduction of pilot workload for multi-axis tasks due to the separation of any required steady vertical or directional control forces from continuously modulated pitch and roll forces.

Directional control on the side-stick -- (4+0) and (3+1) Collective configurations -- provides more precise heading control than the pedals. There is a tendency to inadvertently couple yaw control to roll; however, all pilots easily compensated, eliminating or minimizing this characteristic. The (3+1) Pedal configuration significantly degraded pilot ratings during Phase 1 IMC tasks because of yaw controllability. The limited field-of-view helmet-mounted display had a strong effect on lateral-directional control. Use of separated pedals for VMC tasks was not a problem. With good peripheral visual cues, directional control becomes a less demanding task.

8.3 SCAS DESIGN

The level of handling qualities attainable by various generic SCAS configurations was defined as follows:

Pitch and Roll AFCS

For low speed maneuvering and Precision Hover Tasks under VMC, an attitude command/velocity stabilization system provided satisfactory handling qualities for all controller configurations.

In forward flight satisfactory ratings under VMC were achieved with a hybrid combination of control laws consisting of pitch attitude command/airspeed stabilization in longitudinal and roll rate command/attitude stabilization in lateral.

Satisfactory handling qualities were not achieved for any combination of controller and AFCS investigated for the low-speed IMC maneuvering tasks. Satisfactory ratings were obtained under IMC for both the Bob-up and Precision Hover Tasks when performed in calm air with a longitudinal and lateral velocity command/velocity stabilization system. With wind and turbulence, the addition of a position hold feature was required to maintain satisfactory ratings for the Bob-up Task.

Yaw and Vertical AFCS

Heading and altitude stabilization were beneficial for all tasks. Yaw rate and vertical velocity command systems were preferred for all tasks and controller configurations. However, with a pitch and roll rate command system, there exists a preference for side-stick yaw acceleration and vertical acceleration command systems to eliminate the requirement to hold steady forces during multi-axis maneuvers.

Control Law Mode Switching

To achieve the desirable low speed and forward flight handling qualities without pilot selection, the control laws required automatic phasing during transition as follows:

- Longitudinal - Pitch attitude command/groundspeed stabilization for low speed and pitch attitude command/airspeed stabilization at high speed.
- Lateral - Roll attitude command/groundspeed stabilization for low speed and roll rate command/attitude stabilization at high speed.
- Directional - Full-time heading hold for low speed and turn coordination in forward flight.

The method developed to switch control laws felt natural to the pilot. No undesirable effects on handling qualities were evident during transition maneuvers.

Automatic Control Force Trimming

For stiff-stick or small-deflection controllers, elimination of steady forces for steady-state helicopter trim must be automatic through design of the primary control system and/or AFCS control response laws. The build-up of long-term steady forces is unacceptable.

8.4 IMC DISPLAY EFFECTS

The reduction in quality of visual cues and occasional disorientation experienced when looking off the aircraft centerline with the helmet-mounted display caused significant degradations in handling qualities for certain IMC tasks relative to the identical tasks conducted under VMC. This degradation was especially severe for a low-speed NOE maneuvering task which required a significant amount of pilot head motion to acquire the required visual information. Significant improvements in position hold performance for hover occurred for the IMC tasks compared with the VMC tasks because of the pilots' use of the displayed superimposed symbols which included explicit inertial velocity and position error information.

9.0 RECOMMENDATIONS

The recommendations presented herein are based on the results of the simulation studies as presented previously. As Boeing Vertol was awarded both the ACC/AFCS element of the ADOCS program contract and the ADOCS demonstrator program, the recommendations presented in this section have already been incorporated into the demonstrator control system design. The specific output from this program is described in the following sections:

(1) Recommendations for the side-stick controller configurations and/or design.

(2) Design data for control laws, display laws, and sensor processing.

(3) Sensor information necessary for the AFCS and display system.

9.1 CONTROLLER DESIGN

The definition of a multiaxis side-stick controller (SSC) design for use in the ADOCS demonstrator aircraft was a primary objective of the ACC/AFCS simulation study. Force/deflection characteristics were defined and the effect of the number of axes controlled by the SSC was investigated.

Recommended design characteristics for the various controllers to be manufactured by Lear Siegler Inc. are based on the ACC/AFCS simulation results. Design characteristics for the 4-axis, right-hand SSC are given in Table 9-1 for each control axis. Force/displacement characteristics for alternate controllers, including a left-hand single-axis collective controller and small-deflection force pedals, are defined in Table 9-2. The Lear Siegler manufactured ADOCS brassboard 4-axis controller with the characteristics outlined in Table 9-1 was evaluated during the final piloted simulation phase. The results from this simulation demonstrated that an acceptable hardware design was achieved.

In addition to the 4-axis configuration, the simulation studies investigated the alternate controller configurations as previously defined. Because the separated controller configurations (ie. the (3+1) Collective and the (2+1+1) configurations) received improved pilot ratings for certain tasks, the demonstrator aircraft should contain provisions to study these configurations as well as the 4-axis configuration.

9.2 CONTROL LAW DESIGN

The control laws developed during the ACC/AFCS program were designed to provide the handling qualities required to accomplish the attack/scout helicopter mission. The control laws

RECOMMENDED 4-AXIS CONTROLLER FORCE/DISPLACEMENT CHARACTERISTICS

AXIS	GRADIENT	MAXIMUM DISPLACEMENT	MAXIMUM FORCE	BREAKOUT
Longitudinal	2.09 lb/deg	± 7.6 degrees or ± 0.8 inch at 6 inch radius	± 15.9 lbs	0.0 lb
Lateral	1.67 lb./deg	± 7.6 degrees or ± 0.8 inch at 6 inch radius	± 12.8 lbs	0.0 lb
Directional	5.0 in-lb/deg	± 7.0 degrees	± 35 in-lbs	0.0 lb
Vertical	95. lb/inch (up) 85. lb/inch (down)	± .156 inches	15.82 lb (up) 13.86 lb (down)	1.0 lb (up) 0.6 lb (down)

Table 9-1

RECOMMENDED ALTERNATE CONTROLLER FORCE/DISPLACEMENT CHARACTERISTICS

CONTROLLER	GRADIENT	MAXIMUM DISPLACEMENT	MAXIMUM FORCE	BREAKOUT
Single-axis collective (left-hand)	2.19 lb/deg	± 6.10 degrees or ± .64 inch at 6 inch radius	± 16.5 lbs	± 0.5 lbs
Pedals	50.0 lb/inch	± .78 inches	± 45.0 lbs	± 6.0 lbs.

Table 9-2

were implemented in a manner that facilitates the evaluation of various SCAS command/stabilization systems during flight testing of the demonstrator aircraft. The recommended PFCS design provides control shaping for both AFCS ON and OFF operation and includes a force trim method that eliminates the requirement for open loop integrators which are undesirable due to redundancy management constraints; i.e. no open-loop integrators are included in the PFCS path due to redundancy management restrictions.

9.2.1 PFCS Design

Significant features of the recommended PFCS design are briefly described as follows:

Force Transducer Quantization - 8-bit signal quantization is required to provide acceptable response resolution in each axis.

Nonlinear Command Response Sensitivity - To provide acceptable response characteristics for both small precision control tasks and large maneuvers, nonlinear command shaping as described in Figures (A2, A4, A6, and A8) is required.

Derivative Rate Limiter (DRL) - A derivative rate limiter is required in each axis to limit the magnitude of initial acceleration response during rapid maneuvers when using a force controller. Characteristics of the limiter were individually selected for each axis so as to reduce peak responses for large control inputs without affecting control precision for small force inputs. Appendix A (Figure A-9)presents the recommended values for the DRL in each axis.

Command Signal Shaping - Forward path lead-lag shaping is included in the PFCS full time for augmented flight conditions. Lead-lag time constants are selected to properly match the desired command model and basic helicopter response characteristics in order to achieve a balanced or small AFCS output during dynamic maneuvers. During AFCS OFF operation, a parallel high-gain lag path with a long time constant is included to automatically reduce steady-state control trim forces to an acceptably low level.

The PFCS design also incorporates a pilot trim switch for AFCS OFF flight. This enables the pilot to trim forces by activating a track-store device which stores the required trim force and slowly injects the command into the PFCS allowing the pilot to remove forces. Alternatively, another automatic method to activate the trim function should be developed for the demonstrator aircraft.

AFCS Port Limiting - All AFCS outputs pass through frequency-selection and limiting networks in the PFCS. The AFCS signals are split between a long-term trim and a high-frequency dynamic compensation path. Each control axis has its own frequency selective/limiting network.

The long-term trim path includes a high-authority limit and rate limit for low-frequency trim correction signals such as directional or vertical control trim variations with airspeed. High-frequency stabilization signals pass through both authority limits with the lower limit dominating. A cross signal path from the rate limiter continually recenters the low-authority dynamic path. The interface network will ramp to zero after AFCS disengagement.

9.2.2 AFCS Design

The stability and control law features recommended for the ADOCS demonstrator design are summarized in Tables 9-3 and 9-4. These design features for AFCS ON flight evolved from the extensive ACC/AFCS simulation studies. Low-speed and forward flight control laws are defined in Table 9-3 for the basic AFCS configuration. Table 9-4 identifies the selectable modes that provide the handling qualities to meet attack helicopter IMC or VMC mission requirements for Precision Hover capability and for tight flight path control during low-speed NOE maneuvers.

Basic AFCS

The basic longitudinal AFCS provides a pitch attitude command system for longitudinal maneuvering at all airspeeds. A pitch attitude command system permits precise control of longitudinal acceleration and velocity trim with a low level of pilot workload. Long-term airspeed retention is provided above 45 knots, and automatic transient-free switchover to a longitudinal groundspeed stabilization system is accomplished below 40 knots.

The lateral axis includes a roll attitude command/lateral velocity stabilization system for precise low-speed maneuvering. Lateral control laws change to a roll rate command/roll attitude hold system in forward flight. A rate command system in forward flight eliminates the requirement to hold control forces in banked turns. Transition between control laws is accomplished smoothly and controlled automatically by logic. Gain switching produces low-rate control trim changes and aircraft responses that are undetectable to the pilot. Automatic coordinated turns in forward flight are obtained using only lateral side-stick controller inputs, i.e. a commanded yaw rate is cross-fed from the lateral axis command model to the directional axis command model.

With Heading Hold disengaged, the basic directional axis has yaw rate stabilization with a yaw acceleration response to command inputs. Balanced flight during forward flight turns, as well as level trim conditions, is achieved automatically by lateral acceleration feed-back to the directional control.

BASIC SCAS MODES

AXIS	HOVER/LOW SPEED		FORWARD FLIGHT	
	COMMAND	STABILITY	COMMAND	STABILITY
LONGITUDINAL	PITCH ATTITUDE	LONGITUDINAL GROUNDSPEED (LOW GAIN)	PITCH ATTITUDE	AIRSPEED HOLD
LATERAL	ROLL ATTITUDE	LATERAL GROUNDSPEED (LOW GAIN)	ROLL RATE & YAW RATE (TURN COORD)	ROLL ATTITUDE HOLD
DIRECTIONAL	YAW ACCELERATION	YAW RATE	YAW ACCELERATION	YAW RATE & LAT ACCEL (TURN COORD)
VERTICAL	VERTICAL ACCELERATION	VERTICAL VELOCITY	VERTICAL ACCELERATION	VERTICAL VELOCITY

Table 9-3

SELECTABLE SCAS MODES

AXIS	HEADING HOLD		VELOCITY STABILITY GROUNDSPEED < 40 KNOTS		HOVER HOLD		ALTITUDE HOLD (RADAR OR BARO)	
	COMMAND	STABILITY	COMMAND	STABILITY	COMMAND	STABILITY	COMMAND	STABILITY
LONGITUDINAL	–	–	PITCH ATTITUDE	LONGITUDINAL GROUNDSPEED (HIGH GAIN)	LONGITUDINAL GROUNDSPEED	LONGITUDINAL GROUNDSPEED OR POSITION HOLD	– –	-
LATERAL	–	–	ROLL ATTITUDE	LATERAL GROUNDSPEED (HIGH GAIN)	LATERAL GROUNDSPEED	LATERAL GROUNDSPEED OR POSITION HOLD	-	
DIRECTIONAL	YAW RATE	FULL TIME HEADING HOLD AS $<$ 40(kts) – – – – – HEADING HOLD $\phi \leq 3^0$ $\dot{\phi} \leq 1^0$/SEC AS $>$ 40(kts)	–	–	YAW RATE	HEADING HOLD	-	–
VERTICAL	–	–	–	-	VERTICAL VELOCITY	ALTITUDE HOLD (RADAR)	VERTICAL VELOCITY	ALTITUDE HOLD – BARO OR RADAR $<$ 1000 (ft)

Table 9-4

The basic vertical AFCS (Altitude Hold Off) is implemented to have a vertical acceleration response at all airspeeds for commanded collective inputs. Hybrid vertical velocity stabilization using filtered normal acceleration feedback is used to augment the basic helicopter vertical damping.

Selectable Modes

The following pilot selectable modes are activated by buttons from a Mode Select Panel.

HEADING HOLD - The baseline directional system is implemented as a rate command/Heading Hold system which is automatically selected when the AFCS is initially engaged. The Heading Hold Mode operates full-time at low speeds. At airspeeds greater than 40 knots the Heading Hold Mode is controlled by logic that automatically locks and unlocks Heading Hold stabilization as required during maneuvering. The pilot can disengage Heading Hold from the Mode Select Panel which converts to basic control laws -- a yaw acceleration command system with yaw rate stabilization.

ALTITUDE HOLD (Barometric and Radar) - A selectable Altitude Hold Mode is provided for both a radar or barometric altitude reference system. Barometric Altitude Hold can be selected at any altitude and airspeed. With Altitude Hold engaged, constant vertical velocity (rate of climb/descent) is commanded by the pilot. If Altitude Hold is engaged while climbing or descending, the vertical velocity will be maintained until the vertical controller is returned to neutral. As the rate of climb/descent returns to zero, the aircraft will lock on to the current altitude.

Radar Altitude Hold is only selectable below 1000 feet AGL. If height is increased above 1000 feet while commanding rate of climb, the Radar Altitude Hold Mode will automatically disengage. The Radar Altitude Hold system is implemented with higher stabilization gains than the barometric system for tighter altitude retention, particularly during precision hover tasks.

VELOCITY STAB - NOE maneuvering at low speeds under IMC required control laws that enable the pilot to maintain tight flight path and ground speed control for single-axis and multi-axis maneuvers. The advantage of an attitude command system with high-gain ground-speed velocity stabilization was demonstrated during ACC/AFCS simulation studies. Maintenance of desired ground track particularly with a limited field-of-view was easier while performing low speed maneuvering, e.g. lateral side-step, longitudinal acceleration/deceleration and coordinated lateral/directional turning (slalom) maneuvers. A high level of velocity stability also improves the rejection of gust and wind disturbances during precision maneuvers around hover.

The Velocity Stabilization Mode is selectable from the Mode Select Panel and engages high-gain groundspeed stabilization feedback paths. Appropriate command model gains are also changed to provide the same attitude response sensitivity characteristics as implemented for the basic AFCS control laws. The Velocity Stabilization Mode can be selected at ground speeds less than 40 knots. The mode is automatically disengaged if ground speed exceeds 40 knots, and must be reselected if required.

HOVER HOLD - The attack helicopter mission dictates precise hover control and maintenance of helicopter X-Y position while executing the Bob-up task -- a vertical unmask/remask maneuver, target search and acquisition, and weapons firing. A Hover Hold Mode is provided as a selectable mode to achieve precision performance requirements for the Bob-up task. The Hover Hold Mode is selected by the pilot from the AFCS Mode Select Panel, or can be automatically activated by Bob-up display mode logic, implemented as part of the attack helicopter Pilot Night Vision System (PNVS). Engagement of the Hover Hold Mode will automatically engage the Heading Hold and Altitude Hold Modes if not already engaged.

Based on ACC/AFCS simulation results, a longitudinal/lateral velocity command system in combination with high-gain velocity stabilization is implemented as the baseline hover hold system. Position reference signals derived from velocity information are also available in the longitudinal and lateral AFCS for position stabilization feedback as part of the Hover Hold Mode. A flight evaluation and comparison of a velocity and position reference system for the hover hold task will be conducted during the Demonstrator program.

Appendix A presents the control law diagrams, including corresponding logic requirements, to implement these modes as previously described.

9.3 Display System

The selectable display modes used to meet attack helicopter operational requirements for various mission tasks are:

Cruise - high-speed level flight enroute to the forward edge of the battle area;

Transition - low-speed NOE maneuvers such as dash, quick stop, and side-ward flight;

Hover - stable hover with minimum drift; and

Bob-Up - unmask, target acquisition, and remask maneuvers over a selected ground position.

A three-position (center off) mode select switch is required to sequence through the four modes in either the forward direction (i.e. Bob-Up, Hover, Transition, Cruise) or reverse direction. This switch should be accessible to the pilot's left-hand, mounted on the left-hand side-stick controller or on the control panel. If mounted on the controller, the switch's breakout force should be minimal (i.e. less than 50% of the SSC breakout force).

Logic to automatically enable/disable display modes should be considered. For instance, the Bob-Up and Hover display modes could be restricted to low speed flight less than 50 knots while the Cruise mode operates only for high speed flight at airspeeds greater than 50 knots.

The symbology dynamics used to aid the pilot under IMC with IHADSS have a significant effect on aircraft handling qualities. It is necessary to ensure compatibility of the symbol dynamics for the various modes and varying dynamic characteristics of the AFCS configuration.

The display mode logic should automatically change the symbology format/sensitivities and AFCS control laws, primarily to reduce pilot workload and to improve low speed maneuvering and hover hold task performance. During ACC/AFCS simulation studies, improved pilot ratings resulted from incorporating the following display modifications. Comparisons to the symbology dynamics and format of the baseline AAH display system are given.

(1) Velocity vector sensitivity was decreased by a factor of two for all modes, i.e. from 6 knots to 12 knots full scale in the Hover and Bob-Up modes, and from 60 knots to 120 knots full scale in the Transition and Cruise modes.

(2) Hover position sensitivity was decreased for the Bob-Up mode from a full scale deflection of 44 feet to 88 feet. Consideration should be given to non-linear scaling of hover position to keep it on scale for large excursions in position.

(3) The cyclic director, or longitudinal and lateral acceleration cue, approximated by washed-out pitch and roll attitudes, requires different sensitivity and time constant values as a function of the command response system type provided by the AFCS. That is, the attitude command system for low-speed NOE maneuvering in the transition and hover mode requires different cyclic director dynamics than a velocity command system for the bob-up task. The Bob-Up display mode automatically engages the AFCS Hover Hold mode providing a velocity command system.

(4) A horizon line was included in the symbology format for all modes. The AH-64 has a horizon line in the transition and cruise modes only.

(5) Lateral acceleration was used to drive the "ball" display instead of side-slip angle to augment turn coordination cues at low speed.

REFERENCES

1. Tsoubanos, C.M. and Kelly, M.B.: "Pilot Night Vision System (PNVS) for Advanced Attack Helicopter (AAH)". AHS Preprint No. 78-16, Presented at the 34th Annual National Forum of the AHS, Washington, DC; May 1978.

2. "Military Specifications - Flying Qualities of Piloted V/STOL Aircraft." MIL-F-83300.

3. Landis, K.H.; Glusman, S.I.; Aiken, E.W.; and Hilbert, K.B.; "An Investigation of Side-Stick-Controller/Stability and Control-Augmentation System Requirements for Helicopter Terrain Flight Under Reduced Visibility Conditions." Presented at the 22nd Aerospace Sciences Meeting, AIAA-84-0235, January 1984.

4. Jones, A.D., "Operations Manual - Vertical Motion Simulator (VMS) S.08," NASA TM-81180, 1980.

5. Talbot, P.D., Tinling, B.E., Decker, W.A., and Chen, R.T.N., "A Mathematical Model of a Single Main Rotor Helicopter for Piloted Simulation," NASA TM-84281, 1982.

6. Hilbert, Kathryn B., "A Mathematical Model of the UH-60 Helicopter." NASA TM 85890, April 1984.

7. Howlett, J.J., "UH-60A Black Hawk Engineering Simulation Program: Vol. 1, Mathematical Model," NASA CR-166309, 1981.

8. "Air Vehicle Technical Description Data Report - UH-60A Input Data for C-81 Rotorcraft Simulation Program" SER-70189, March 1977.

9. Abbott, W.Y., Benson, J.O., Oliver, R.G., and Williams, R.A., "Validation Flight Test of UH-60A for Rotorcraft Systems Integration Simulator (RSIS)". USAAEFA Project No. 79-24, September 1982.

10. Aiken, E.W., "A Mathematical Representation of an Advanced Helicopter for Piloted Simulator Investigations of Control System and Display Variations", USAAVRADCOM TR80-4-2 (NASA TM-81203), July 1980.

11. Landis, K. and Aiken, E., "An Assessment of Various Side Stick Controller/Stability and Control Augmentation Systems for Night Nap-of-the-Earth Flight", Helicopter Handling Qualities, NASA CP-2219, April 1982.

12. Landis, K., Aiken, E., Dunford, P., and Hilbert, K., "A Piloted Simulator Investigation of Side-Stick Controller/ Stability and Control Augmentation System Requirements for Helicopter Visual Flight Tasks," Presented at the 39th Annual Forum of the American Helicopter Society, Paper A-83-39-59-4000, St. Louis, MO, May, 1983.

13. Smith, S.B.: "Limited Flight Evaluatin of Side Stick Force-Deflection Characteristics on Aircraft Handling Qualities". AFFTC-TR-77-34, Nov. 1977.

14. Smith, S.B. and Miller, C.M.: "An Evaluation of Sidestick Force/Deflection Characteristics on Aircraft Handling Qualities". AFFDL-TR78-171, Oct. 1978.

15. Hall, G.W. and Smith, R.E.: "Flight Investigation of Fighter Side-Stick Force-Deflection Characteristics". AFFDKL-TR-75-39, May 1975.

16. Black, G.T. and Moorhouse, D.J.: "Flying Qualities Design Requirements for Sidestick Controllers". AFFDL-TR-3126, Oct. 1979.

17. Cooper, G.E. and Harper, R.P., Jr., "The Use of Pilot Rating in the Evaluation of Aircraft Handling Qualities," NASA TN D-5153, 1969.

18. Sinclair, M. and Morgan M.: "An Investigation of Multi-Axis Isometric Side-Arm Controllers in a Variable Stability Helicopter". National Research Council Canada LR-606, NRC #19629, Aug. 1981.

APPENDIX A

Functional block diagrams, representative of the control laws utilized during the final simulation phase, are included in Appendix A.

Included are:

A-1 Longitudinal PFCS
A-2 Longitudinal Control Response Shaping
A-3 Lateral PFCS
A-4 Lateral Control Response Shaping
A-5 Directional PFCS
A-6 Directional Control Response Shaping
A-7 Vertical PFCS
A-8 Vertical Control Response Shaping
A-9 Derivative Rate Limiter
A-10 Control System Mixing

A-11 Longitudinal AFCS
A-12 Lateral AFCS
A-13 Directional AFCS
A-14 Vertical AFCS

A-15 Airspeed Complementary Filter
A-16 Altitude Complementary Filter
A-17 Position Feedback Derivation

A-18 Altitude Hold Logic
A-19 Heading Hold/Turn Coordination Logic
A-20 Hover Hold Logic
A-21 Longitudinal/Lateral Mode Switching Logic

A-22 Longitudinal Rate Response Sensitivity
A-23 Longitudinal Attitude Response Sensitivity
A-24 Longitudinal Velocity Response Sensitivity

A-25 Lateral Rate Response Sensitivity
A-26 Lateral Attitude Response Sensitivity
A-27 Lateral Velocity Response Sensitivity

A-28 Directional Rate Response Sensitivity
A-29 Directional Acceleration Response Sensitivity

A-30 Vertical Rate Response Sensitivity
A-31 Vertical Acceleration Response Sensitivity

LONGITUDINAL PFCS

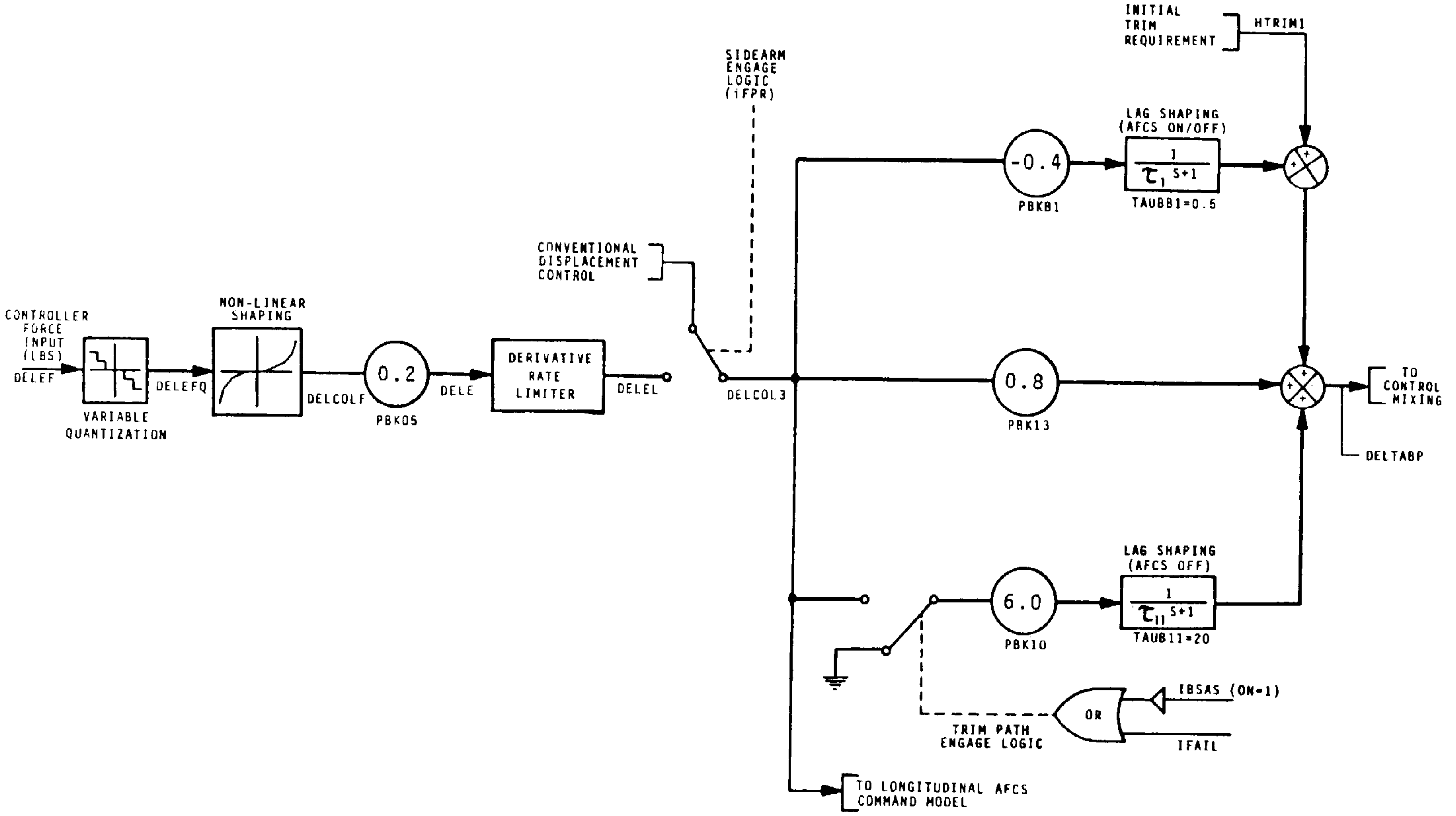

CONTROLLER FORCE INPUT (LBS)
DELEF
VARIABLE QUANTIZATION
DELEFQ
NON-LINEAR SHAPING
DELCOLF
0.2
PBK05
DELE
DERIVATIVE RATE LIMITER
DELEL
CONVENTIONAL DISPLACEMENT CONTROL
SIDEARM ENGAGE LOGIC (iFPR)
DELCOL3
-0.4
PBKB1
LAG SHAPING (AFCS ON/OFF)
$\frac{1}{\tau_1 s+1}$
TAUBB1=0.5
INITIAL TRIM REQUIREMENT
HTRIM1
0.8
PBK13
TO CONTROL MIXING
DELTABP
6.0
PBK10
LAG SHAPING (AFCS OFF)
$\frac{1}{\tau_{11} s+1}$
TAUB11=20
OR
IBSAS (ON=1)
IFAIL
TRIM PATH ENGAGE LOGIC
TO LONGITUDINAL AFCS COMMAND MODEL

LONGITUDINAL CONTROL RESPONSE SHAPING

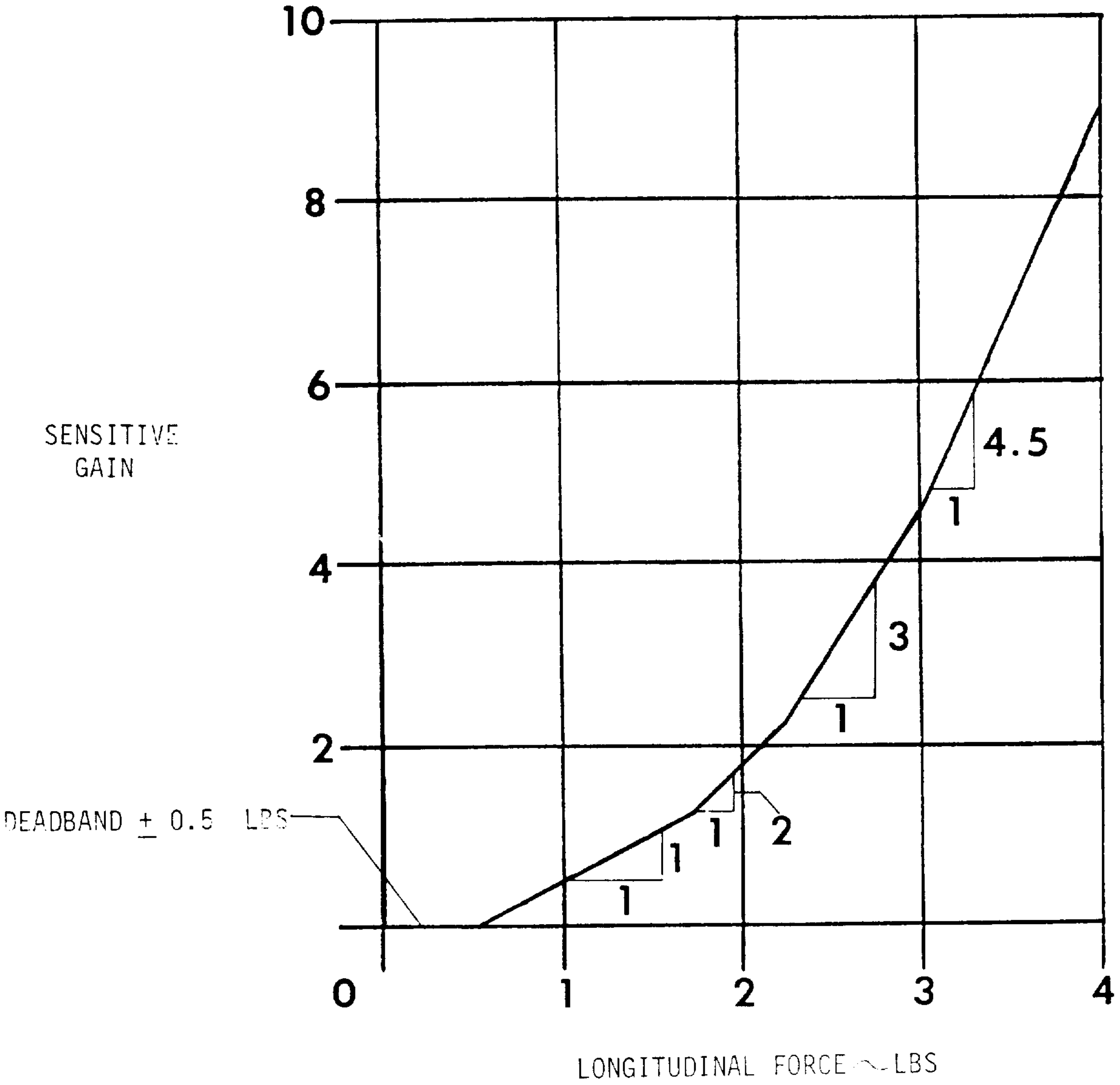

LATERAL PFCS

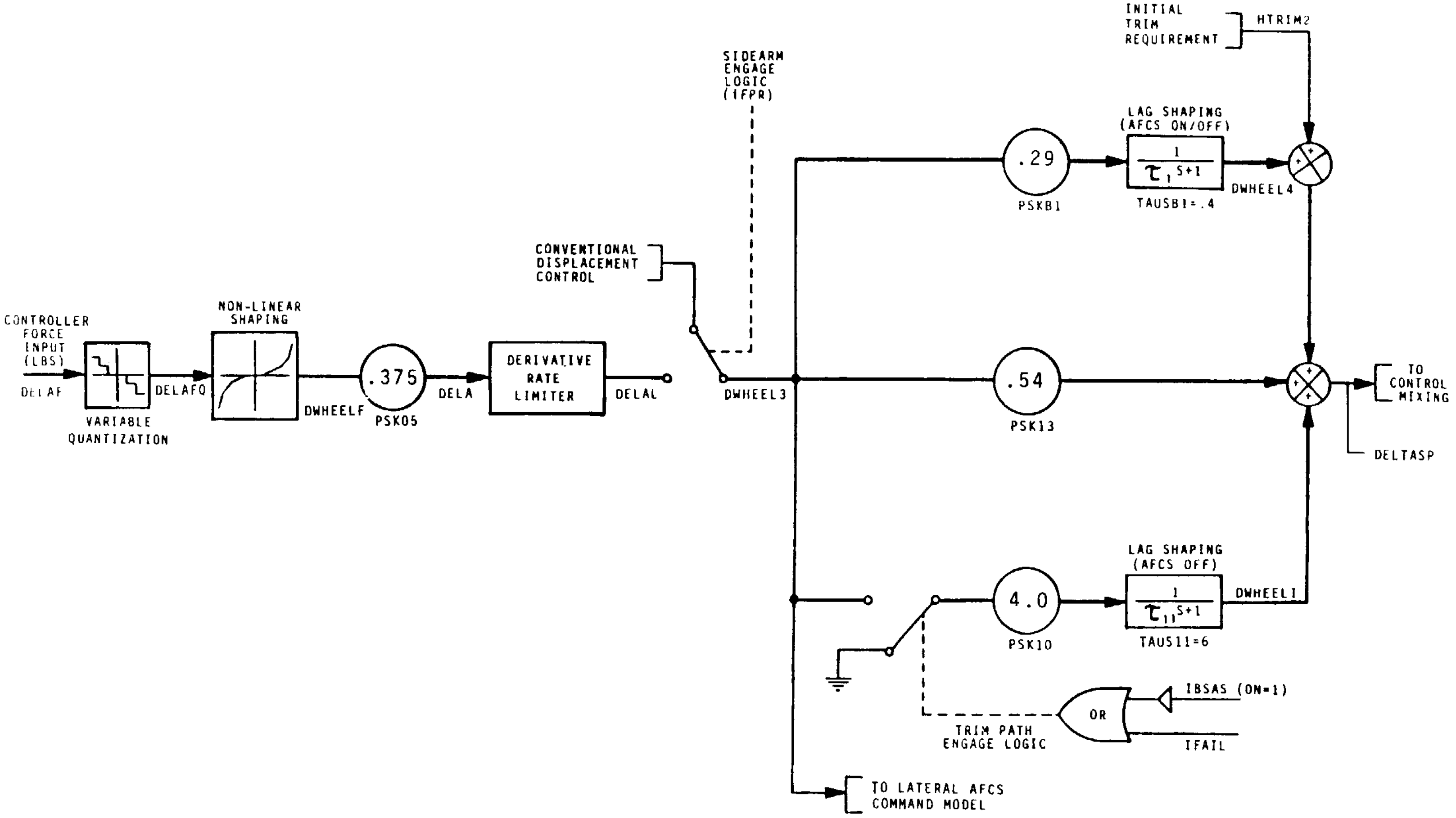
CONTROLLER FORCE INPUT (LBS)
DELAF
VARIABLE QUANTIZATION
DELAFQ
NON-LINEAR SHAPING
DWHEELF
.375
PSK05
DELA
DERIVATIVE RATE LIMITER
DELAL
CONVENTIONAL DISPLACEMENT CONTROL
SIDEARM ENGAGE LOGIC (IFPR)
DWHEEL3
.29
PSKB1
LAG SHAPING (AFCS ON/OFF)
$\frac{1}{\tau_1 S+1}$
TAUSB1=.4
DWHEEL4
INITIAL TRIM REQUIREMENT
HTRIM2
.54
PSK13
TO CONTROL MIXING
DELTASP
4.0
PSK10
LAG SHAPING (AFCS OFF)
$\frac{1}{\tau_{11} S+1}$
TAUS11=6
DWHEEL1
OR
IBSAS (ON=1)
IFAIL
TRIM PATH ENGAGE LOGIC
TO LATERAL AFCS COMMAND MODEL

LATERAL CONTROL RESPONSE SHAPING

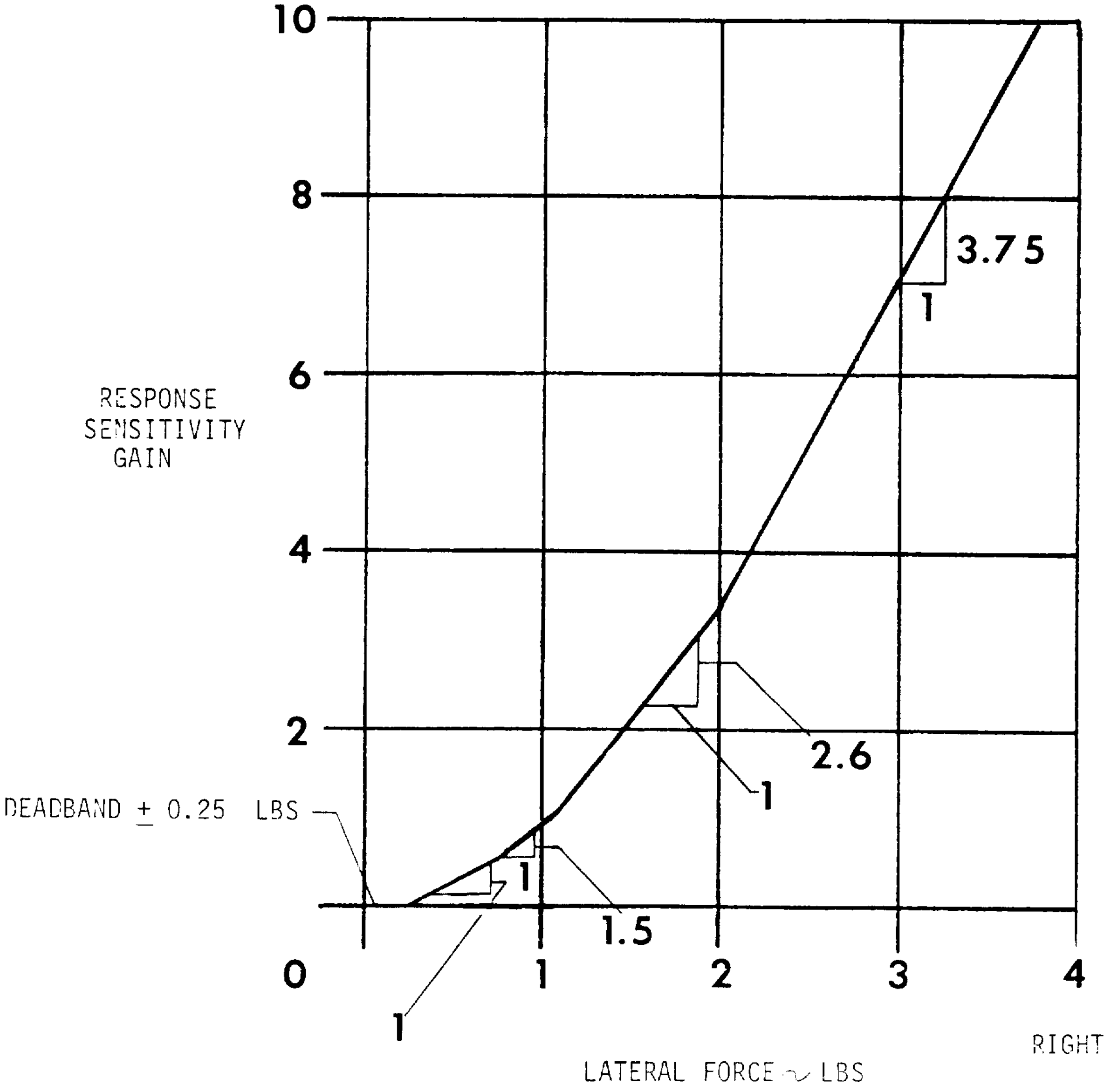

SYMMETRICAL FOR LEFT CONTROL FORCES

DIRECTIONAL PFCS

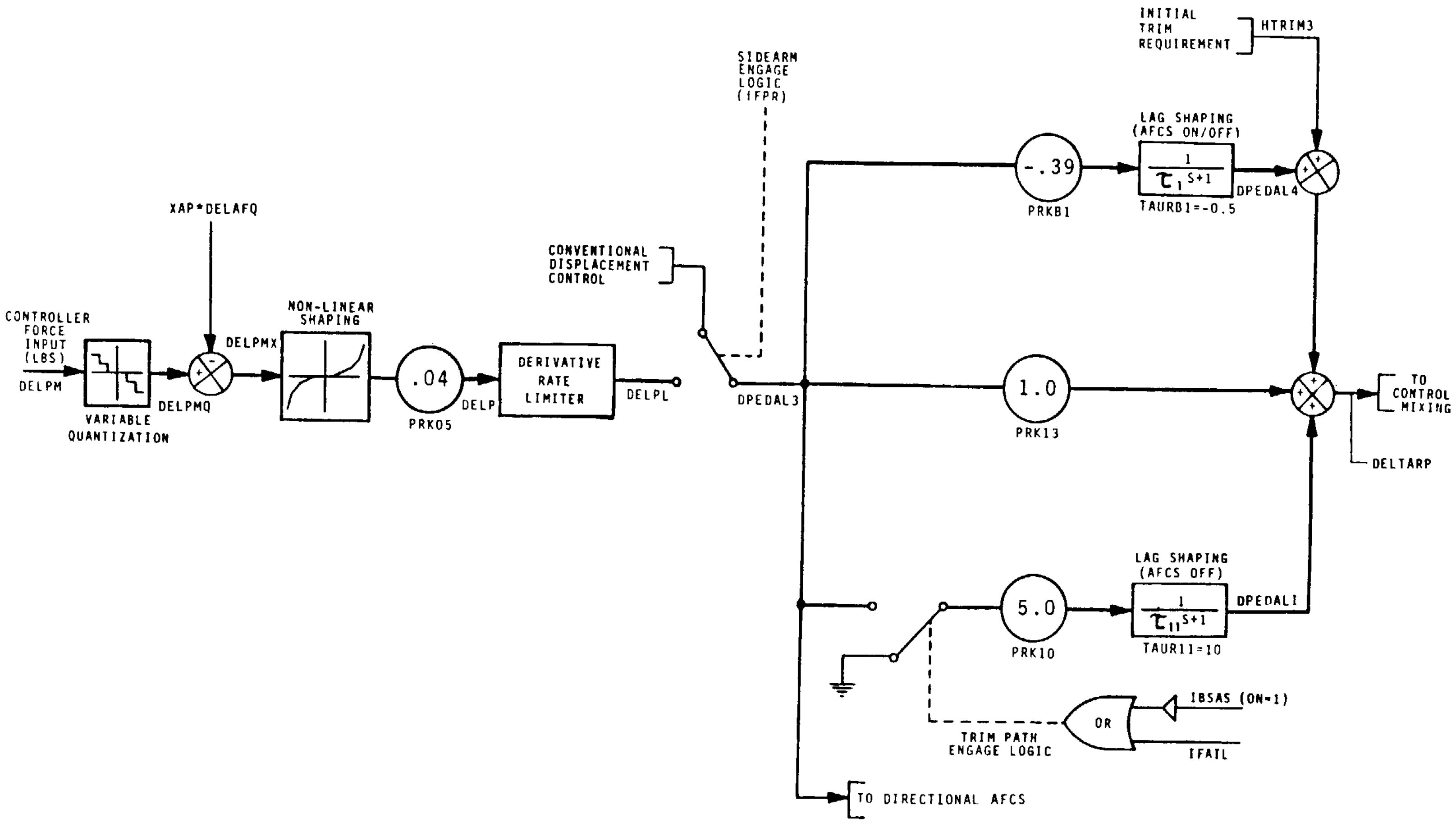
CONTROLLER
FORCE
INPUT
(LBS)
DELPM
VARIABLE
QUANTIZATION
DELPMQ
XAP*DELAFQ
DELPMX
NON-LINEAR
SHAPING
.04
PRK05
DELP
DERIVATIVE
RATE
LIMITER
DELPL
CONVENTIONAL
DISPLACEMENT
CONTROL
SIDEARM
ENGAGE
LOGIC
(IFPR)
DPEDAL3
-.39
PRKB1
LAG SHAPING
(AFCS ON/OFF)
$\frac{1}{\tau_1 S+1}$
TAURB1=-0.5
DPEDAL4
INITIAL
TRIM
REQUIREMENT
HTRIM3
1.0
PRK13
TO
CONTROL
MIXING
DELTARP
5.0
PRK10
LAG SHAPING
(AFCS OFF)
$\frac{1}{\tau_{11} S+1}$
TAUR11=10
DPEDAL1
IBSAS (ON=1)
OR
IFAIL
TRIM PATH
ENGAGE LOGIC
TO DIRECTIONAL AFCS

DIRECTIONAL CONTROL RESPONSE SHAPING

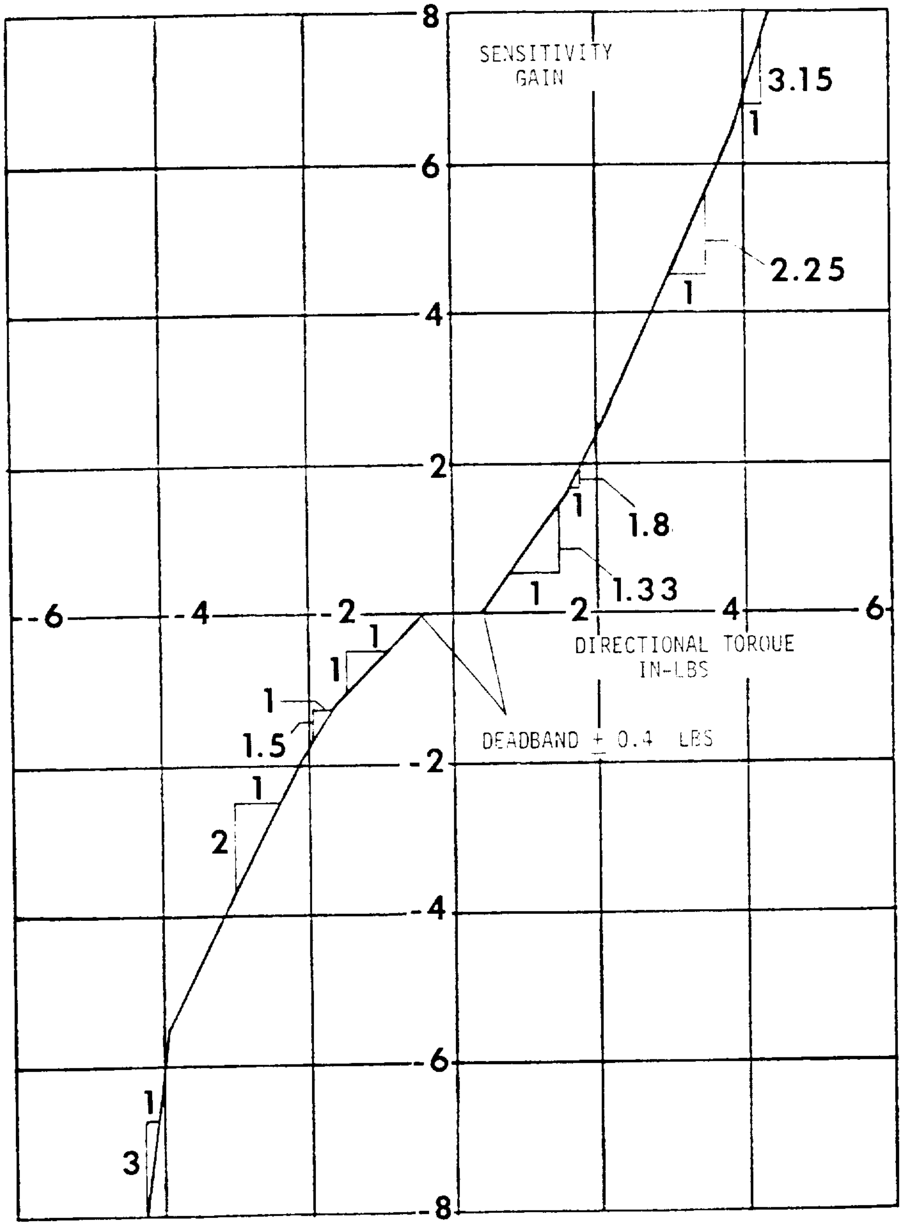

VERTICAL PFCS

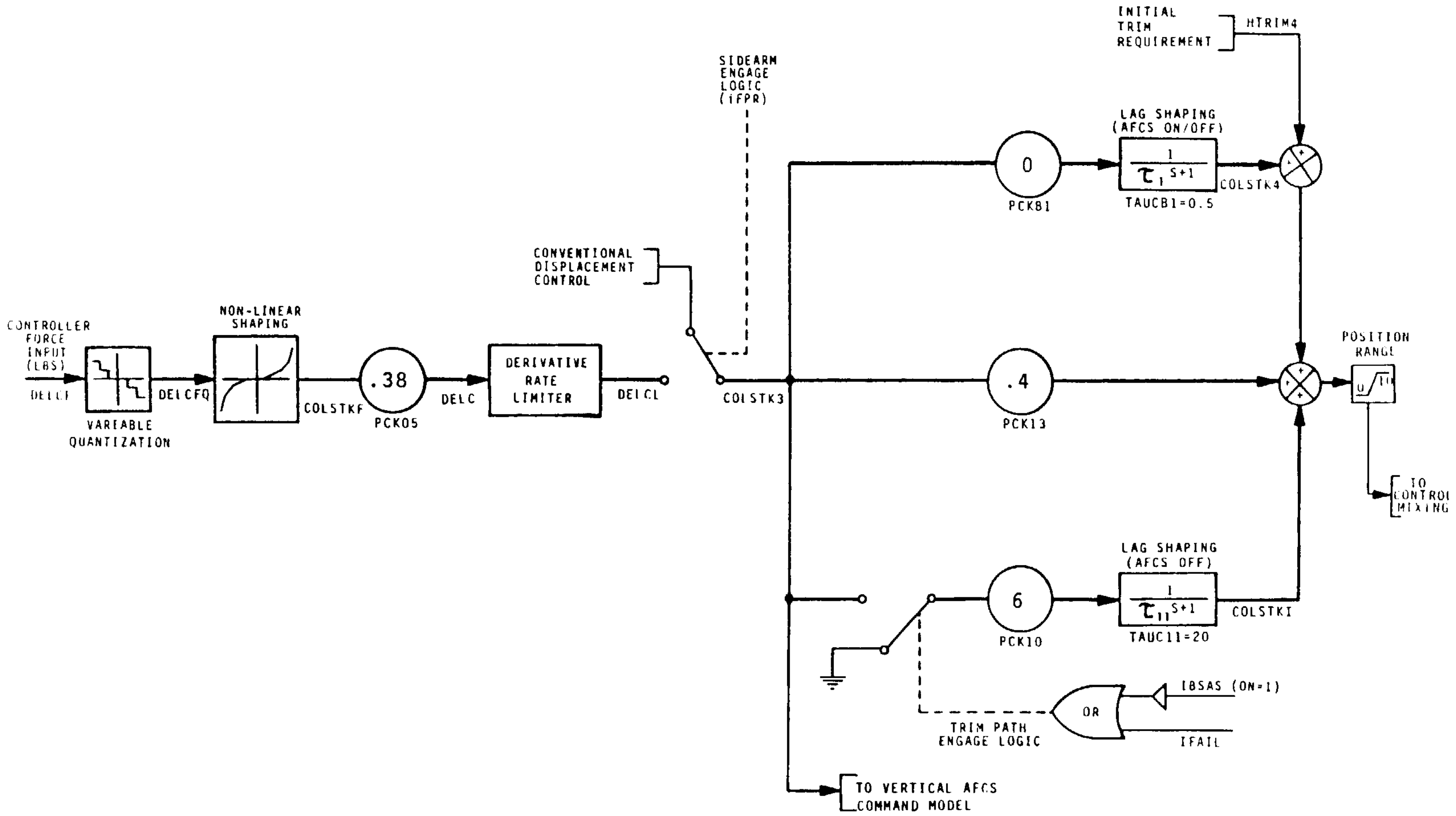
CONTROLLER
FORCE
INPUT
(LBS)
DELCF
VARIABLE
QUANTIZATION
DELCFQ
NON-LINEAR
SHAPING
COLSTKF
.38
PCK05
DELC
DERIVATIVE
RATE
LIMITER
DELCL
CONVENTIONAL
DISPLACEMENT
CONTROL
SIDEARM
ENGAGE
LOGIC
(IFPR)
COLSTK3
0
PCKB1
LAG SHAPING
(AFCS ON/OFF)
$\frac{1}{\tau_1 S+1}$
TAUCB1=0.5
COLSTK4
INITIAL
TRIM
REQUIREMENT
HTRIM4
.4
PCK13
6
PCK10
LAG SHAPING
(AFCS OFF)
$\frac{1}{\tau_{11} S+1}$
TAUC11=20
COLSTKI
POSITION
RANGE
TO
CONTROL
MIXING
OR
IBSAS (ON=1)
IFAIL
TRIM PATH
ENGAGE LOGIC
TO VERTICAL AFCS
COMMAND MODEL

VERTICAL CONTROL RESPONSE SHAPING

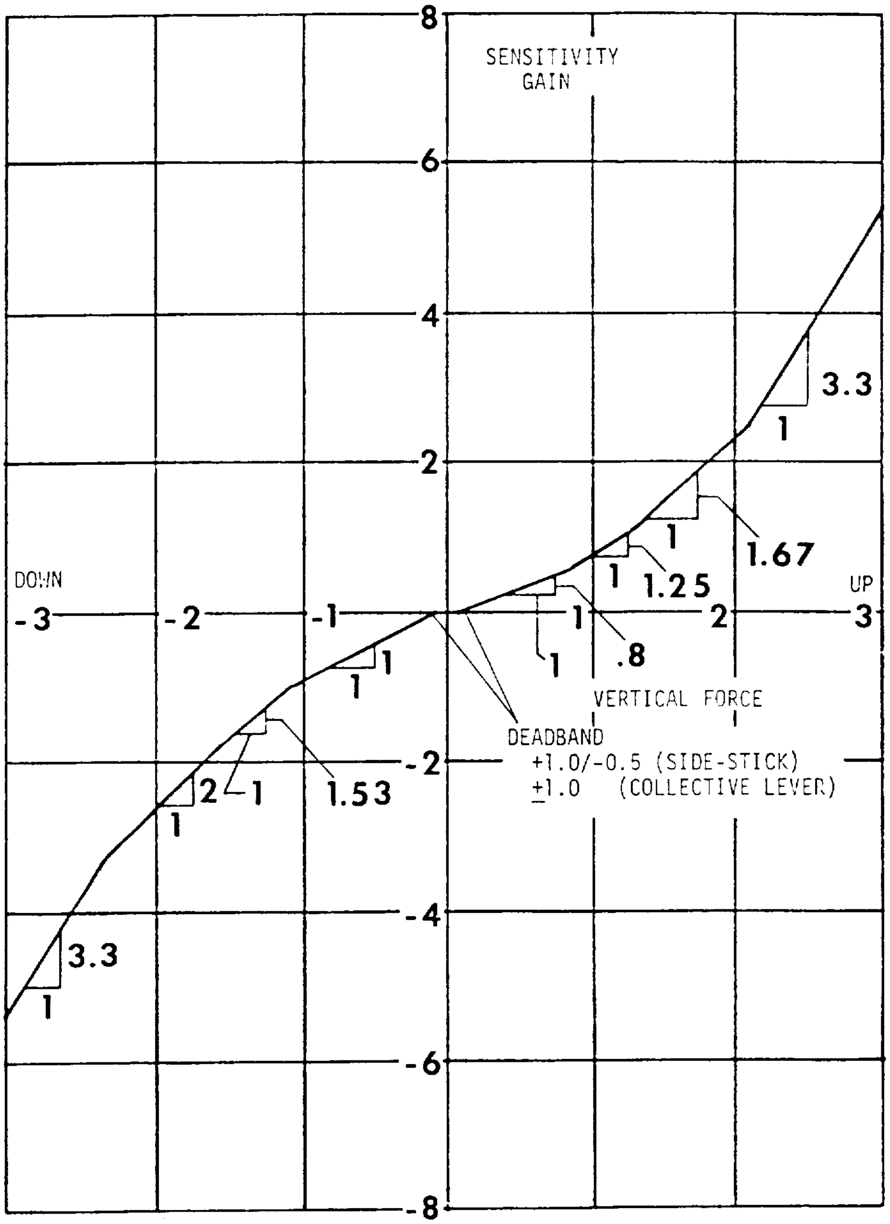

DERIVATIVE RATE LIMITER

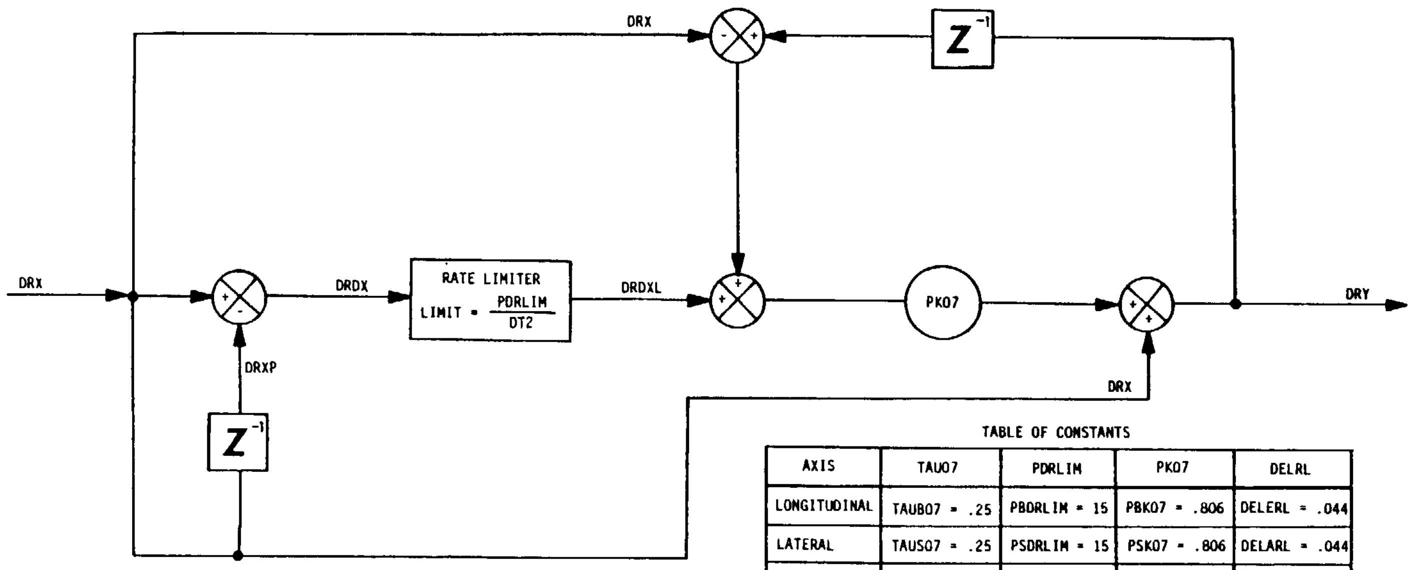
DRX
DRX
Z⁻¹
DRXP
Z⁻¹
DRDX
RATE LIMITER
LIMIT = PDRLIM / DT2
DRDXL
PK07
DRX
DRY
+
-
+
+
+
+
+
-

TABLE OF CONSTANTS

AXIS	TAU07	PDRLIM	PK07	DELRL
LONGITUDINAL	TAUB07 = .25	PBDRLIM = 15	PBK07 = .806	DELERL = .044
LATERAL	TAUS07 = .25	PSDRLIM = 15	PSK07 = .806	DELARL = .044
DIRECTIONAL	TAUR07 = .322	PRDRLIM = 0	PRK07 = .846	DELPRL = 0
VERTICAL	TAUC07 = .443	PCDRLIM = 4.2	PCK07 = .885	DELCRL = .012

EQUATIONS

DT2 = .054

PK07 = EXP (-DT2/TAU07)

DELRL = PDRLIM* (DT2**2)

CONTROL SYSTEM MIXING

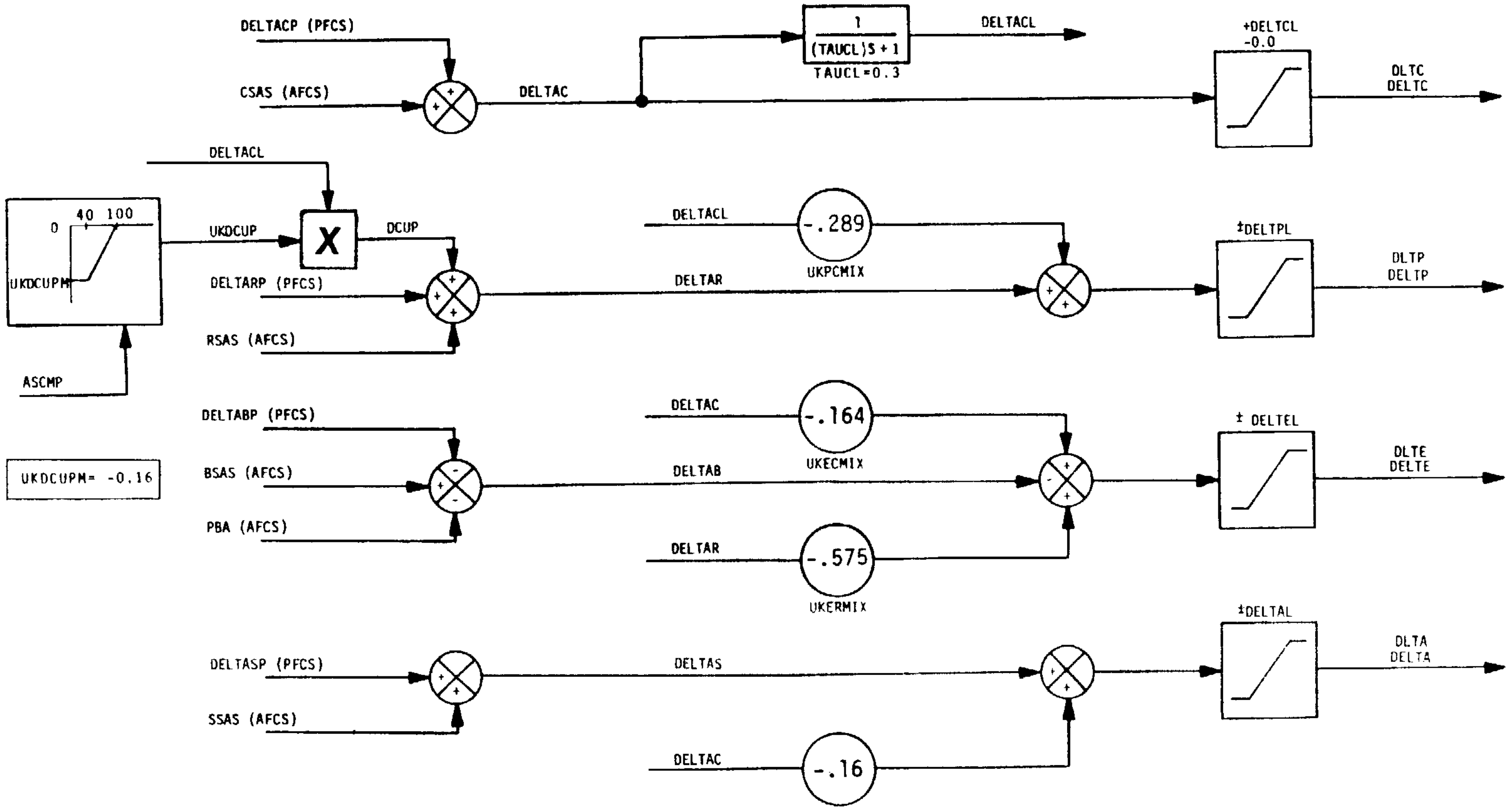
DELTACP (PFCS)
CSAS (AFCS)
DELTAC
1
(TAUCL)S + 1
TAUCL=0.3
DELTACL
+DELTCL
-0.0
DLTC
DELTC
DELTACL
0
40
100
UKDCUPM
UKDCUP
X
DCUP
DELTARP (PFCS)
RSAS (AFCS)
ASCMP
DELTACL
-.289
UKPCMIX
DELTAR
±DELTPL
DLTP
DELTP
DELTABP (PFCS)
BSAS (AFCS)
PBA (AFCS)
UKDCUPM= -0.16
DELTAC
-.164
UKECMIX
DELTAB
DELTAR
-.575
UKERMIX
± DELTEL
DLTE
DELTE
DELTASP (PFCS)
SSAS (AFCS)
DELTAS
DELTAC
-.16
±DELTAL
DLTA
DELTA

ORIGINAL PAGE IS
OF POOR QUALITY

ADOCS LONGITUDINAL
ACC/AFCS PHASE

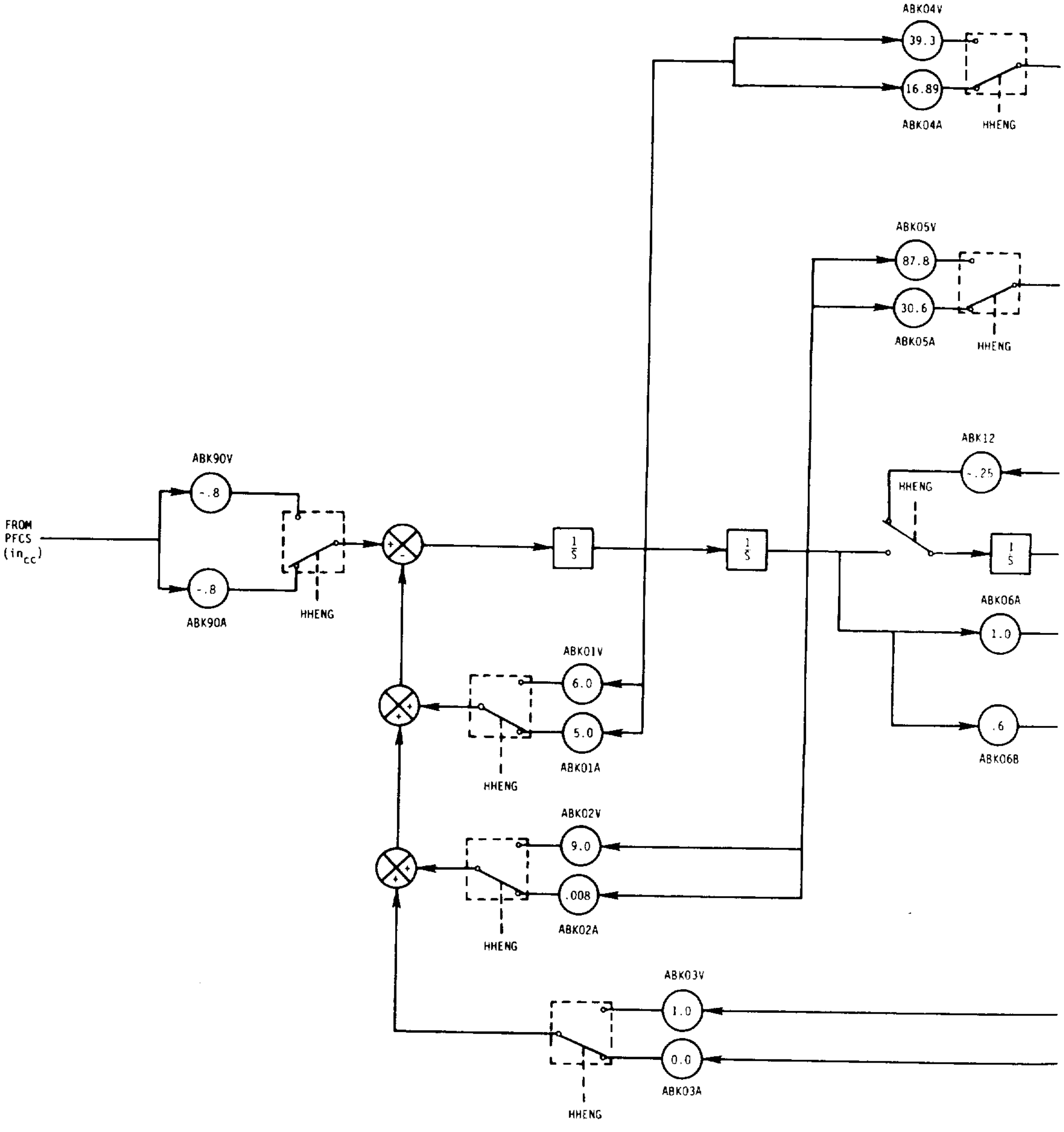
ABK04V
39.3
16.89
ABK04A
HHENG
ABK05V
87.8
30.6
ABK05A
HHENG
ABK12
-.25
HHENG
1/S
ABK06A
1.0
.6
ABK06B
ABK90V
-.8
FROM
PFCS
(in$_{cc}$)
-.8
ABK90A
HHENG
+
-
1/S
1/S
ABK01V
6.0
5.0
ABK01A
HHENG
ABK02V
9.0
.008
ABK02A
HHENG
ABK03V
1.0
0.0
ABK03A
HHENG

FOLDOUT FRAME

AFCS
B

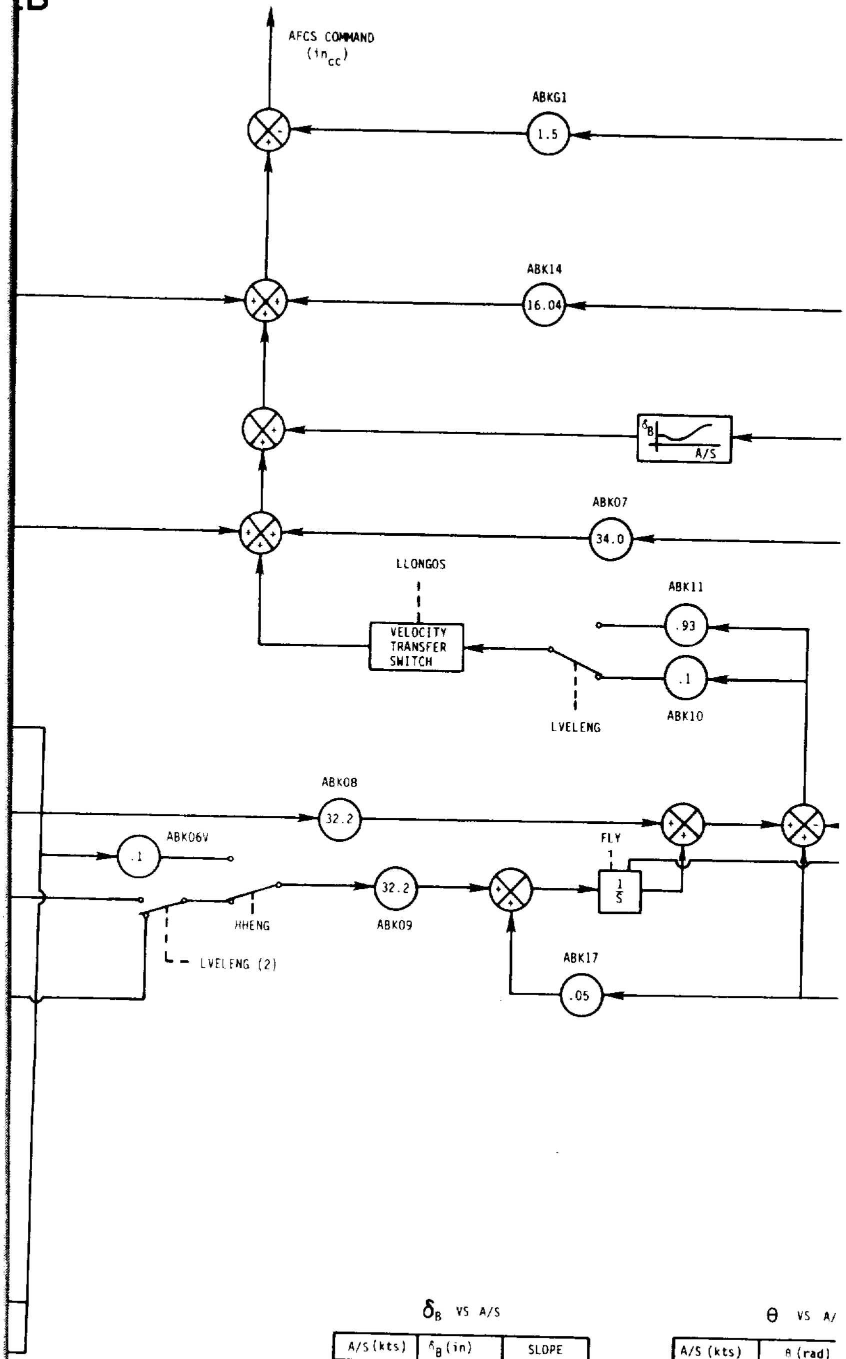
AFCS COMMAND
(in_{cc})
ABKG1
1.5
ABK14
16.04
δ_B
A/S
ABK07
34.0
LLONGOS
VELOCITY TRANSFER SWITCH
ABK11
.93
.1
ABK10
LVELENG
ABK08
32.2
.1
ABK06V
HHENG
32.2
ABK09
FLY
1
$\frac{1}{S}$
ABK17
.05
LVELENG (2)

δ_B VS A/S

A/S (kts)	δ_B (in)	SLOPE
-40	.3124	0
40	.3124	-.0134
51	.165	0
60	.165	.003
65	.18	.027
80	.588	.0207
94	.88	.0117
100	.95	.00625
108	1.0	.0058
120	1.07	.00165
140	1.103	0

θ VS A/

A/S (kts)	θ (rad)
-40	.094
40	.094
58	.046
80	.044
100	.028
140	-.048

FOLDOUT FRAME 2

ORIGINAL PAGE IS
OF POOR QUALITY

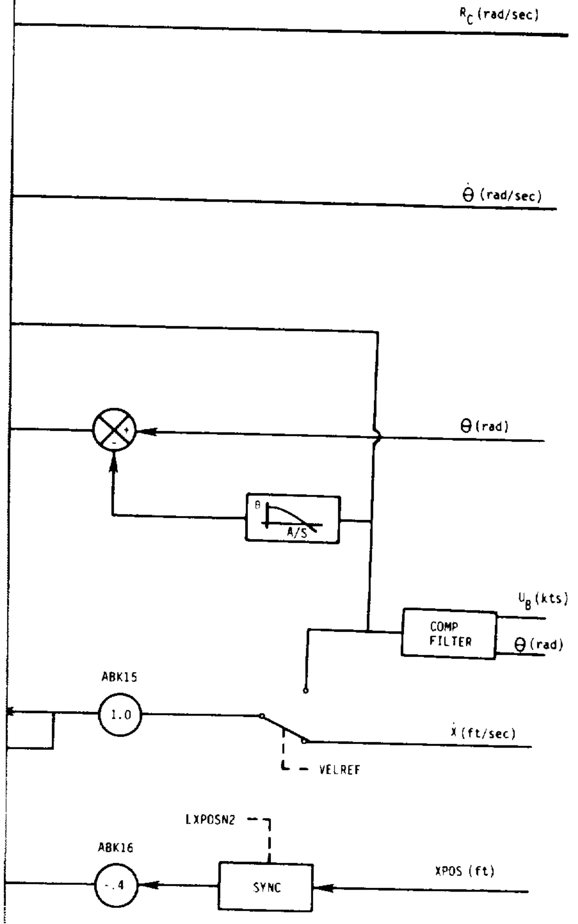
R_C (rad/sec)
$\dot{\theta}$ (rad/sec)
+
-
θ (rad)
θ
A/S
U_B (kts)
COMP
FILTER
θ (rad)
ABK15
1.0
$\dot{x}$ (ft/sec)
VELREF
LXPOSN2
ABK16
-.4
SYNC
XPOS (ft)

S

SLOPE
0
-.00267
-.000091
-.0008
-.0019
0

3

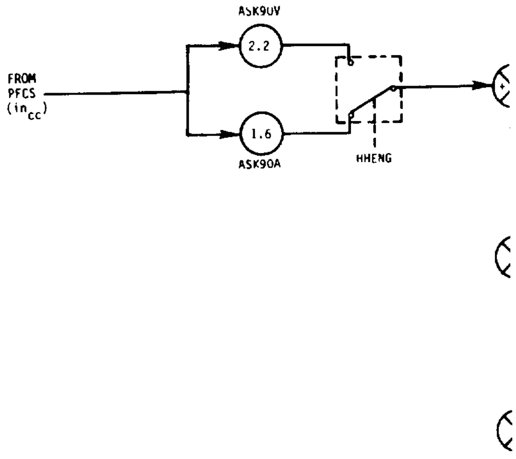
ASK9UV
2.2
FROM
PFCS
(in_{cc})
1.6
ASK90A
HHENG
+

ORIGINAL PAGE IS
OF POOR QUALITY

ADOCS LATERAL AFCS
ACC/AFCS PHASE 2B

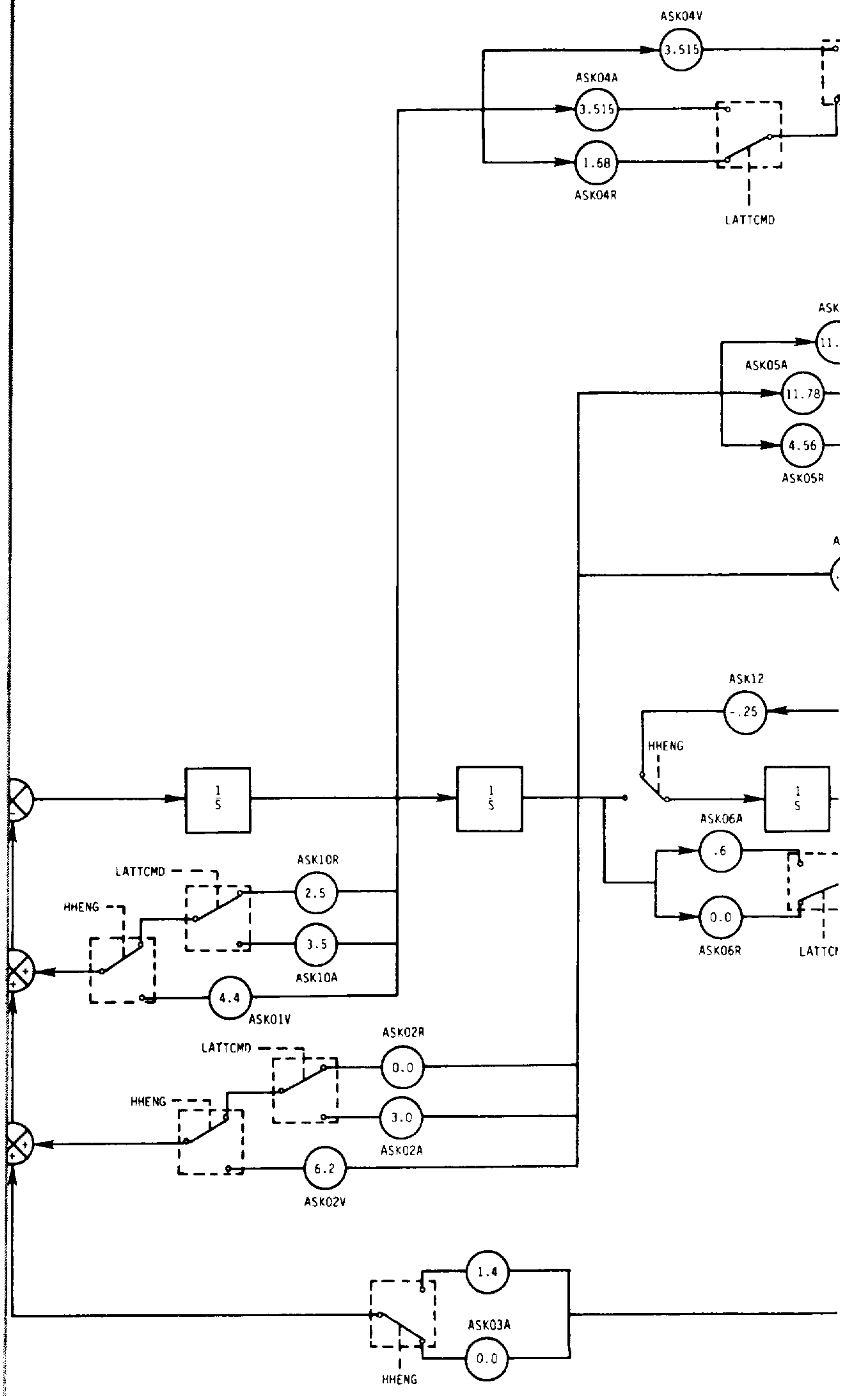
ASK04V
3.515
ASK04A
3.515
1.68
ASK04R
LATTCMD
ASK05A
11.78
4.56
ASK05R
ASK12
-.25
HHENG
1/S
1/S
1/S
ASK06A
.6
0.0
ASK06R
LATTCMD
HHENG
ASK10R
2.5
3.5
ASK10A
4.4
ASK01V
ASK02R
LATTCMD
0.0
HHENG
3.0
ASK02A
6.2
ASK02V
1.4
ASK03A
0.0
HHENG

FOLDOUT FRAME 2

2

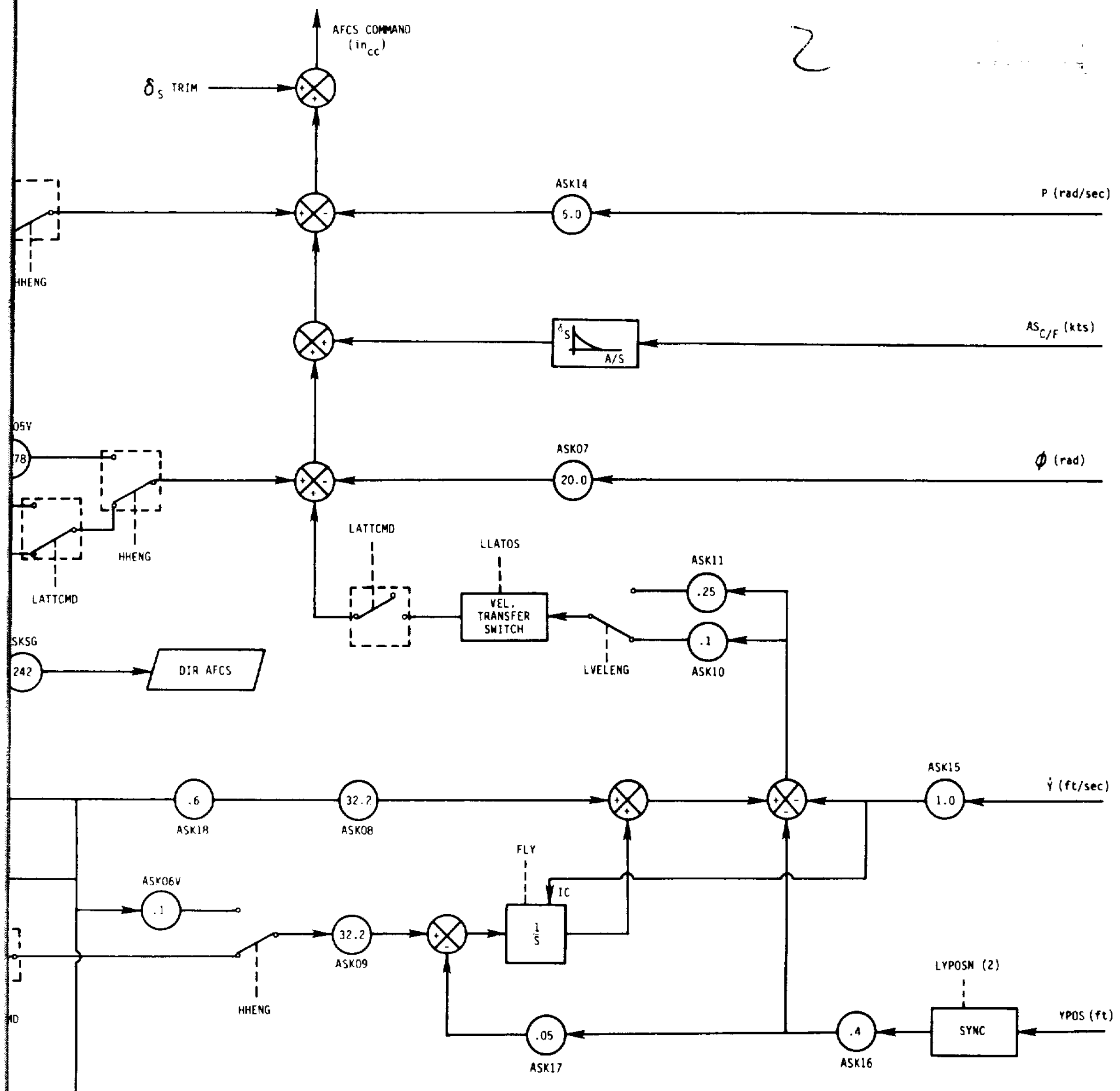

AFCS COMMAND
(in_{cc})
δ_S TRIM
ASK14
5.0
P (rad/sec)
HHENG
δ_S
A/S
$AS_{C/F}$ (kts)
05V
78
ASK07
20.0
ϕ (rad)
HHENG
LATTCMD
LATTCMD
LLATOS
VEL. TRANSFER SWITCH
ASK11
.25
.1
ASK10
LVELENG
SKSG
242
DIR AFCS
.6
ASK18
32.2
ASK08
ASK15
1.0
$\dot{Y}$ (ft/sec)
FLY
IC
$\frac{1}{S}$
ASK06V
.1
32.2
ASK09
HHENG
MD
LYPOSN (2)
SYNC
YPOS (ft)
.4
ASK16
.05
ASK17

δ_S VS A/S

A/S (kts)	δ_S (in)	SLOPE
-40	-.477	0
40	-.477	-.016
60	-.158	-.00475
80	-.063	-.0026
100	-.011	-.00055
120	0	0

ORIGINAL PAGE IS OF POOR QUALITY

ADOC
AC

FOLDOUT FRAME

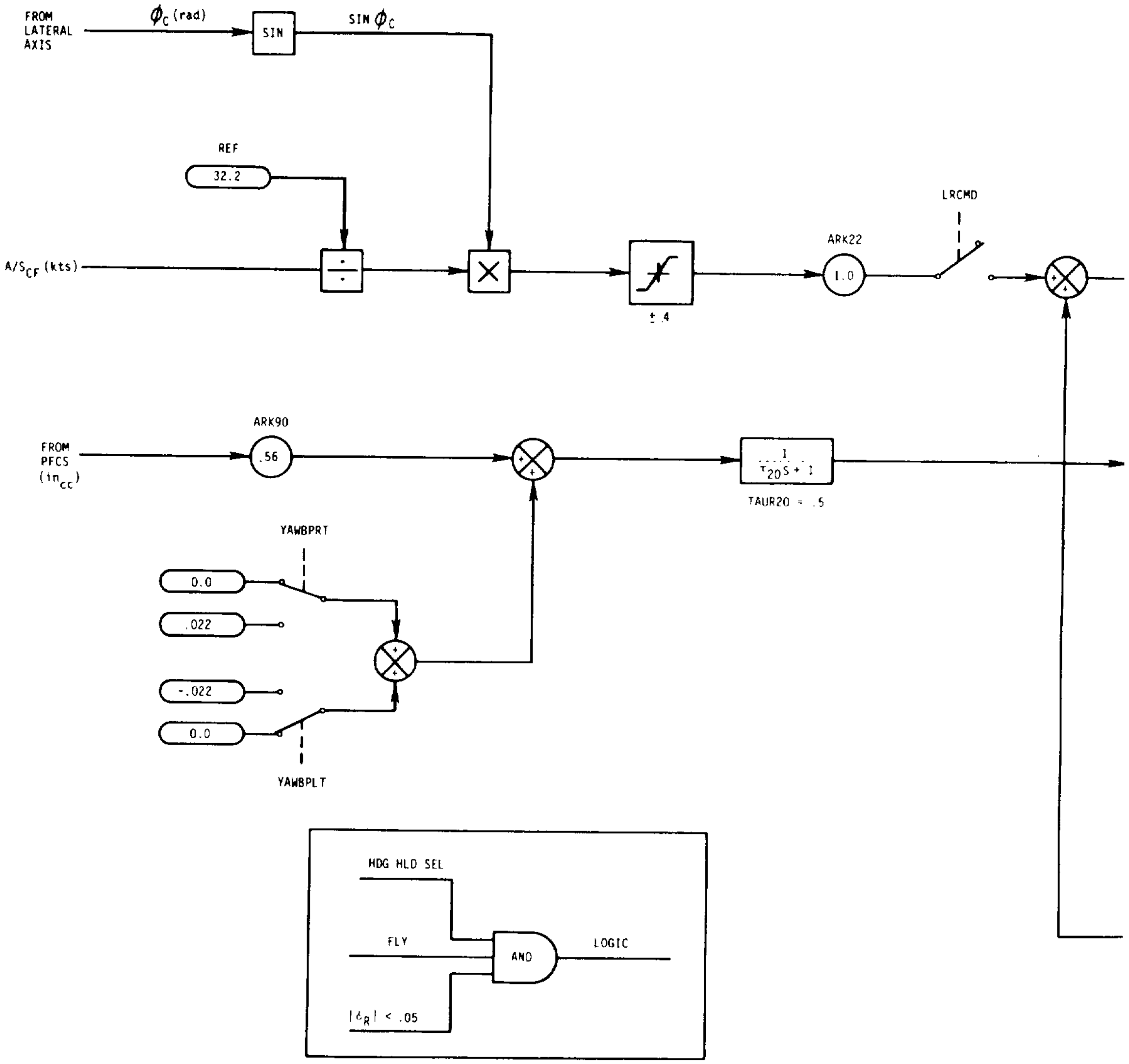
FROM
LATERAL
AXIS
ϕ_C (rad)
SIN
SIN ϕ_C
REF
32.2
A/S_{CF} (kts)
÷
×
± .4
ARK22
1.0
LRCMD
FROM
PFCS
(in_{cc})
ARK90
.56
+
+
$\frac{1}{\tau_{20}S + 1}$
TAUR20 = .5
YAWBPRT
0.0
.022
-.022
0.0
YAWBPLT
HDG HLD SEL
FLY
AND
LOGIC
$|\delta_R| < .05$

ORIGINAL PAGE IS
OF POOR QUALITY

S DIRECTIONAL AFCS
C/AFCS PHASE 2B

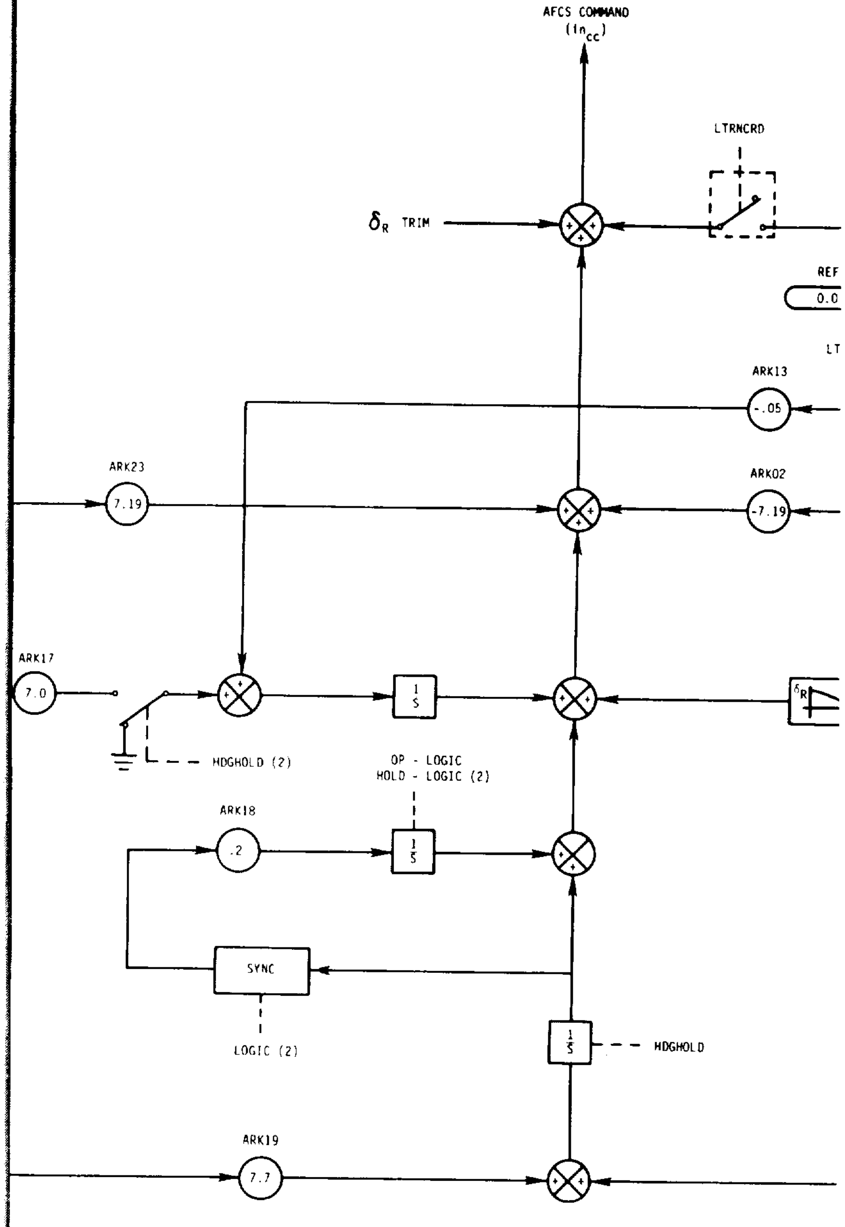
AFCS COMMAND
(in_{cc})
LTRNCRD
δ_R TRIM
REF
0.0
LT
ARK13
-.05
ARK23
7.19
ARK02
-7.19
ARK17
7.0
HDGHOLD (2)
1/S
OP - LOGIC
HOLD - LOGIC (2)
δ_R
ARK18
.2
1/S
SYNC
LOGIC (2)
1/S
HDGHOLD
ARK19
7.7

δ_R VS A/S

A/S (kts)	δ_R(in)	SLOPE
-40	-.055	0
40	-.055	-.0025
56	-.095	0
62	-.095	.004
67	-.075	.0078
80	.026	.00345
100	.095	.00185
120	.132	0

FOLDOUT FRAME 2

3 FOLDOUT FRAME

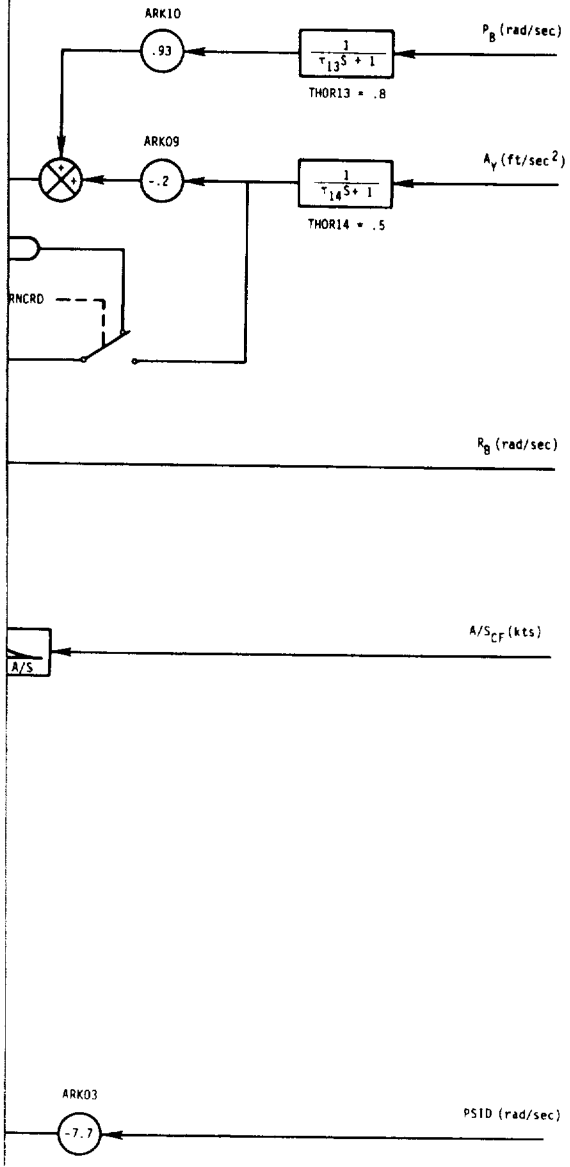
ARK10
.93
1
τ13S + 1
THOR13 = .8
P_B (rad/sec)
+
+
ARK09
-.2
1
τ14S+ 1
THOR14 = .5
A_Y (ft/sec²)
RNCRD
R_B (rad/sec)
A/S
A/S_CF (kts)
ARK03
-7.7
PSID (rad/sec)

ORIGINAL PAGE IS
OF POOR QUALITY

FOLDOUT FRAME

1

X	Y	SLOPE
-40	5.7	0
40	5.7	-.0283
100	4.0	0

2

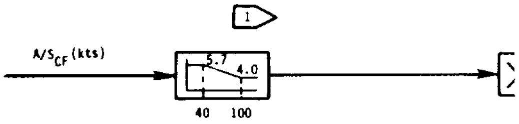
1
A/S$_{CF}$ (kts)
5.7
4.0
40
100

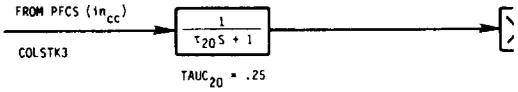
FROM PFCS (in$_{cc}$)
COLSTK3
$\frac{1}{\tau_{20}S + 1}$
TAUC$_{20}$ = .25

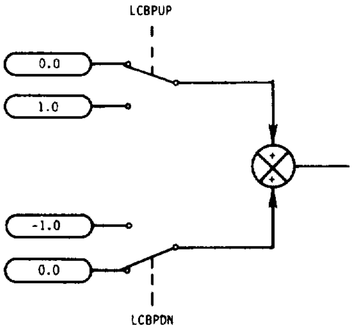
LCBPUP
0.0
1.0
+
+
-1.0
0.0
LCBPDN

ORIGINAL PAGE IS
OF POOR QUALITY

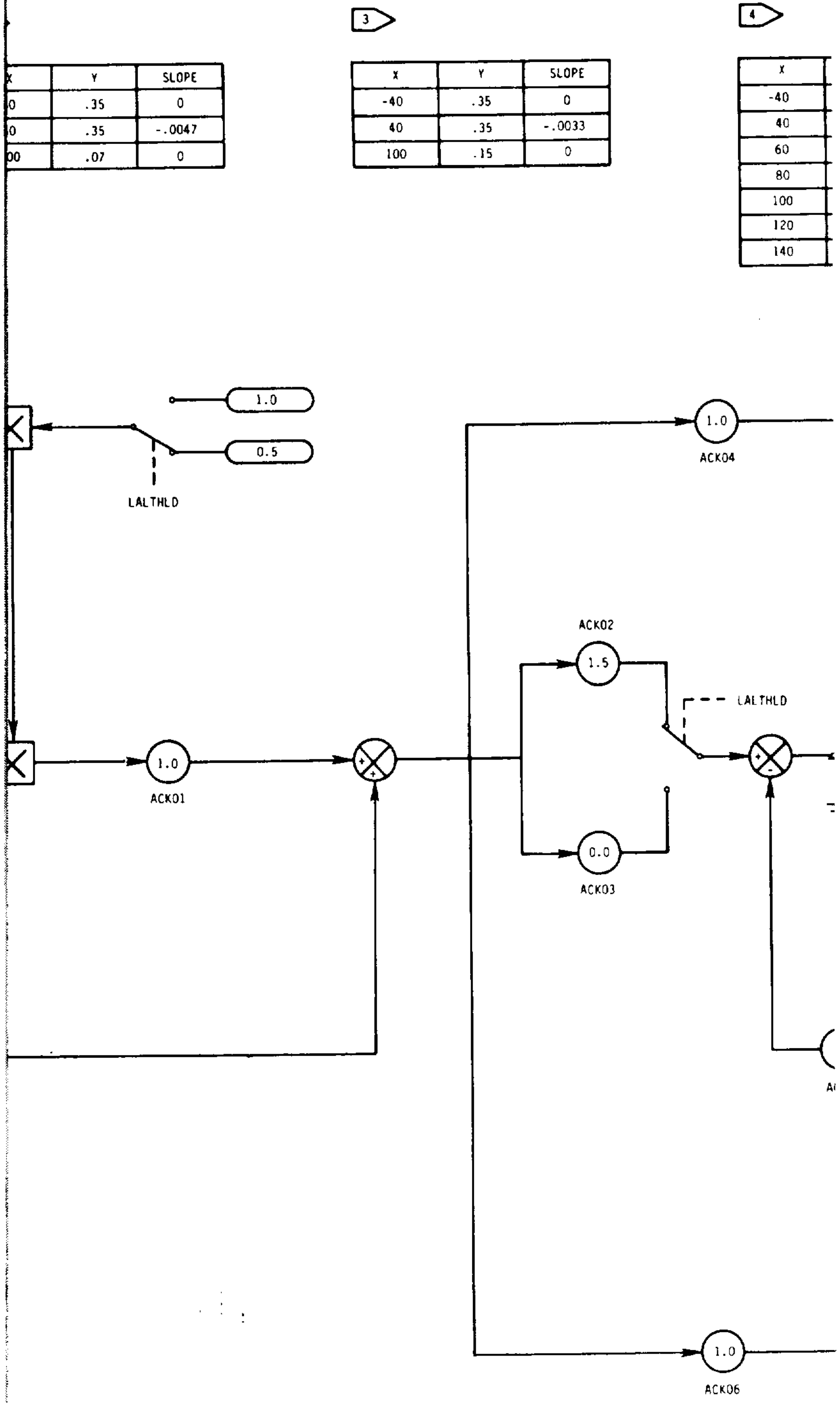
X
Y
SLOPE
.35
0
.35
-.0047
.07
0
3
X
Y
SLOPE
-40
.35
0
40
.35
-.0033
100
.15
0
4
X
-40
40
60
80
100
120
140
1.0
0.5
LALTHLD
1.0
ACK04
ACK02
1.5
LALTHLD
1.0
ACK01
0.0
ACK03
1.0
ACK06

ADOCS VERTICAL A
ACC/AFCS PHASE

FOLDOUT FRAME 2

3 FOLDOUT FRAME

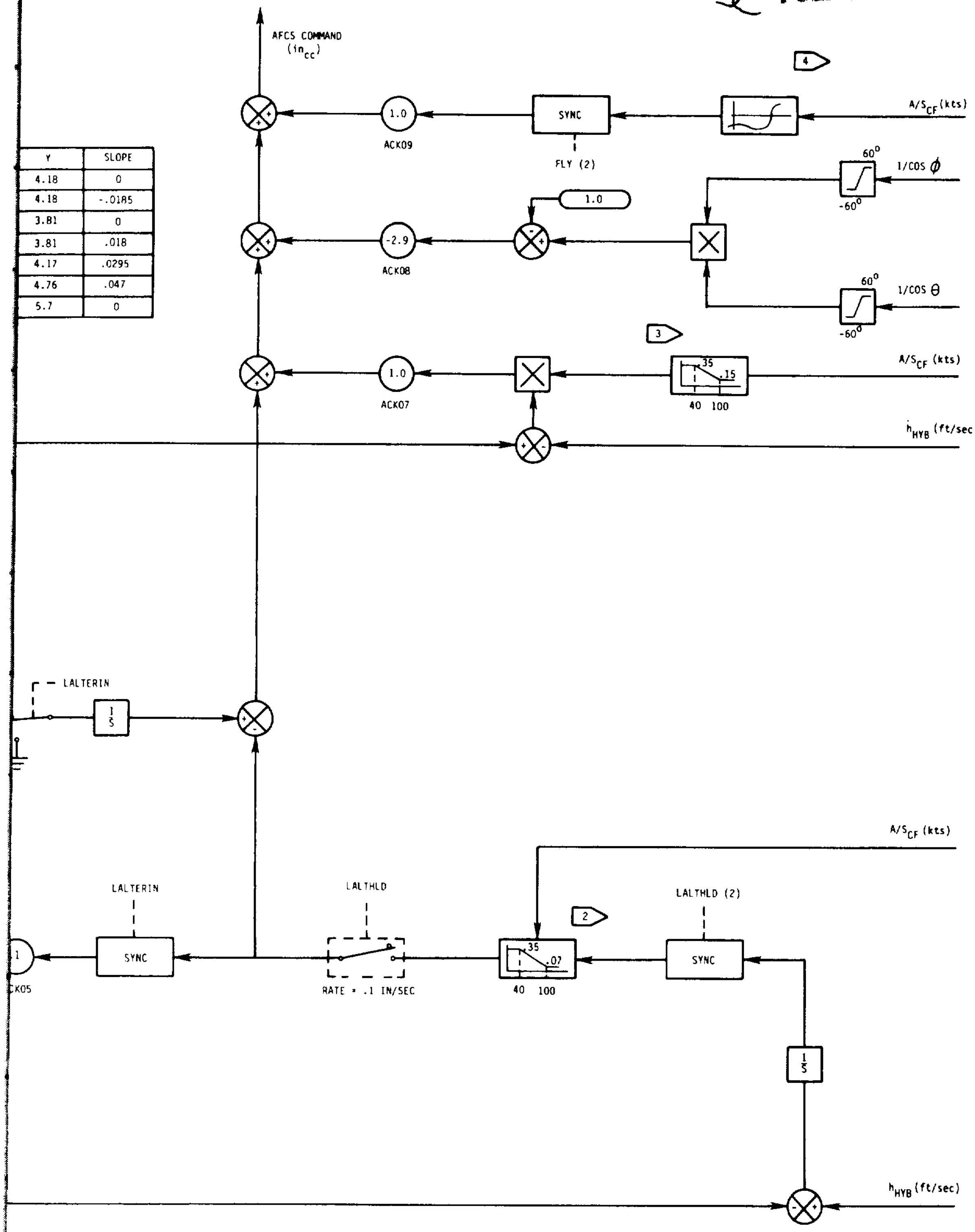
AFCS COMMAND
(in_{cc})
4
A/S_{CF} (kts)
SYNC
FLY (2)
1.0
ACK09
60^0
1/COS ϕ
-60^0
1.0
-2.9
ACK08
60^0
1/COS θ
-60^0
3
A/S_{CF} (kts)
.35
.15
40 100
1.0
ACK07
$\dot{h}_{HYB}$ (ft/sec)
LALTERIN
$\frac{1}{S}$
A/S_{CF} (kts)
LALTERIN
LALTHLD
LALTHLD (2)
2
1
CK05
SYNC
RATE = .1 IN/SEC
.35
.07
40 100
SYNC
$\frac{1}{S}$
h_{HYB} (ft/sec)

Y	SLOPE
4.18	0
4.18	-.0185
3.81	0
3.81	.018
4.17	.0295
4.76	.047
5.7	0

FCS
2B

ORIGINAL PAGE IS
OF POOR QUALITY

C-3

AIRSPEED COMPLEMENTARY FILTER

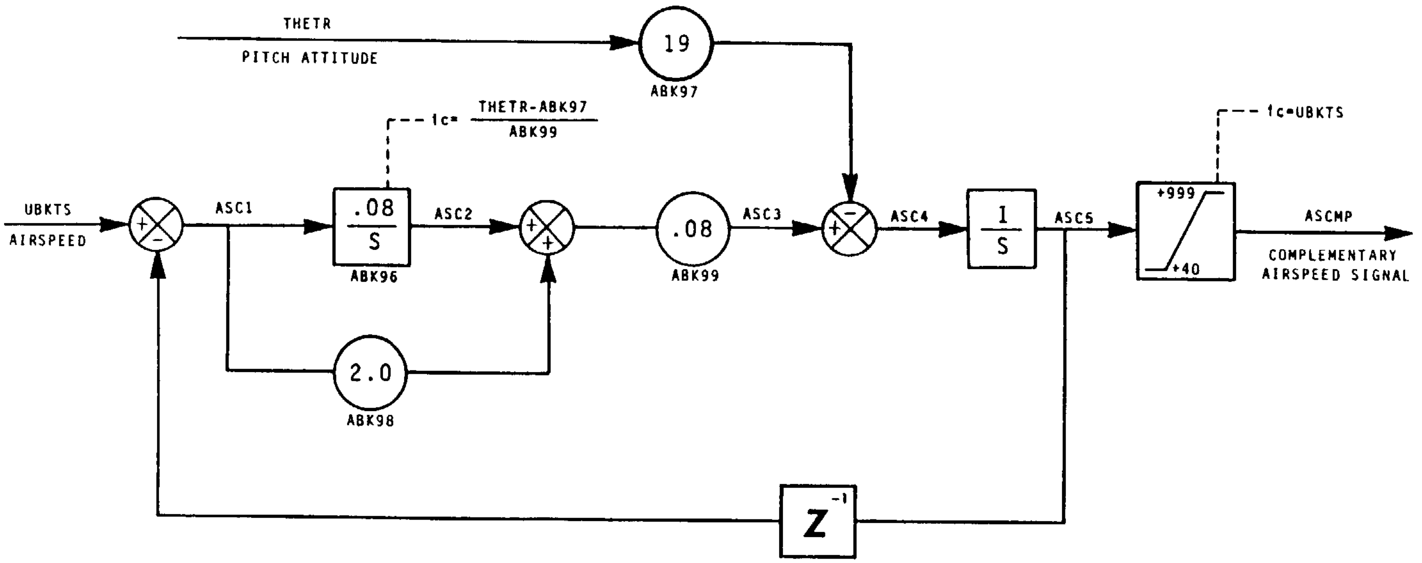
THETR
PITCH ATTITUDE
19
ABK97
Ic= THETR-ABK97 / ABK99
Ic=UBKTS
UBKTS
AIRSPEED
+
-
ASC1
.08 / S
ABK96
ASC2
+
+
2.0
ABK98
.08
ABK99
ASC3
+
-
ASC4
1 / S
ASC5
+999
+40
ASCMP
COMPLEMENTARY
AIRSPEED SIGNAL
Z^-1

ALTITUDE COMPLEMENTARY FILTER

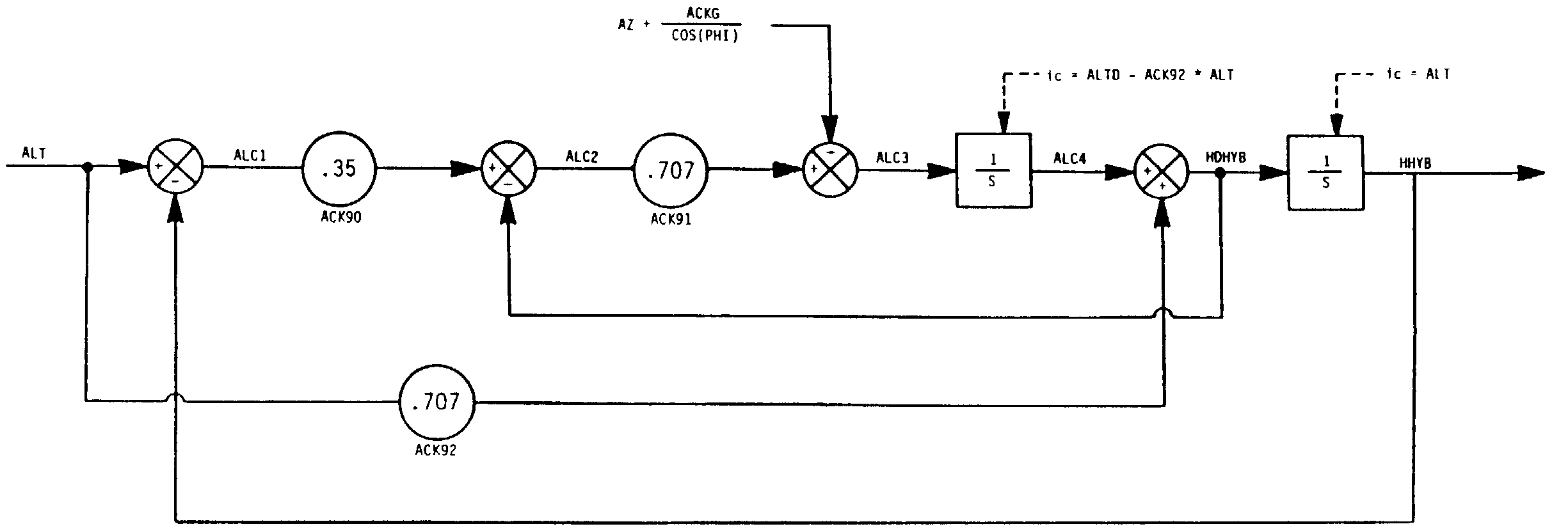
AZ + ACKG / COS(PHI)
ic = ALTD - ACK92 * ALT
ic = ALT
ALT
ALC1
.35
ACK90
ALC2
.707
ACK91
ALC3
1/S
ALC4
HDHYB
1/S
HHYB
.707
ACK92
+
-
+
-
-
+
+
+

POSITION FEEDBACK DERIVATION

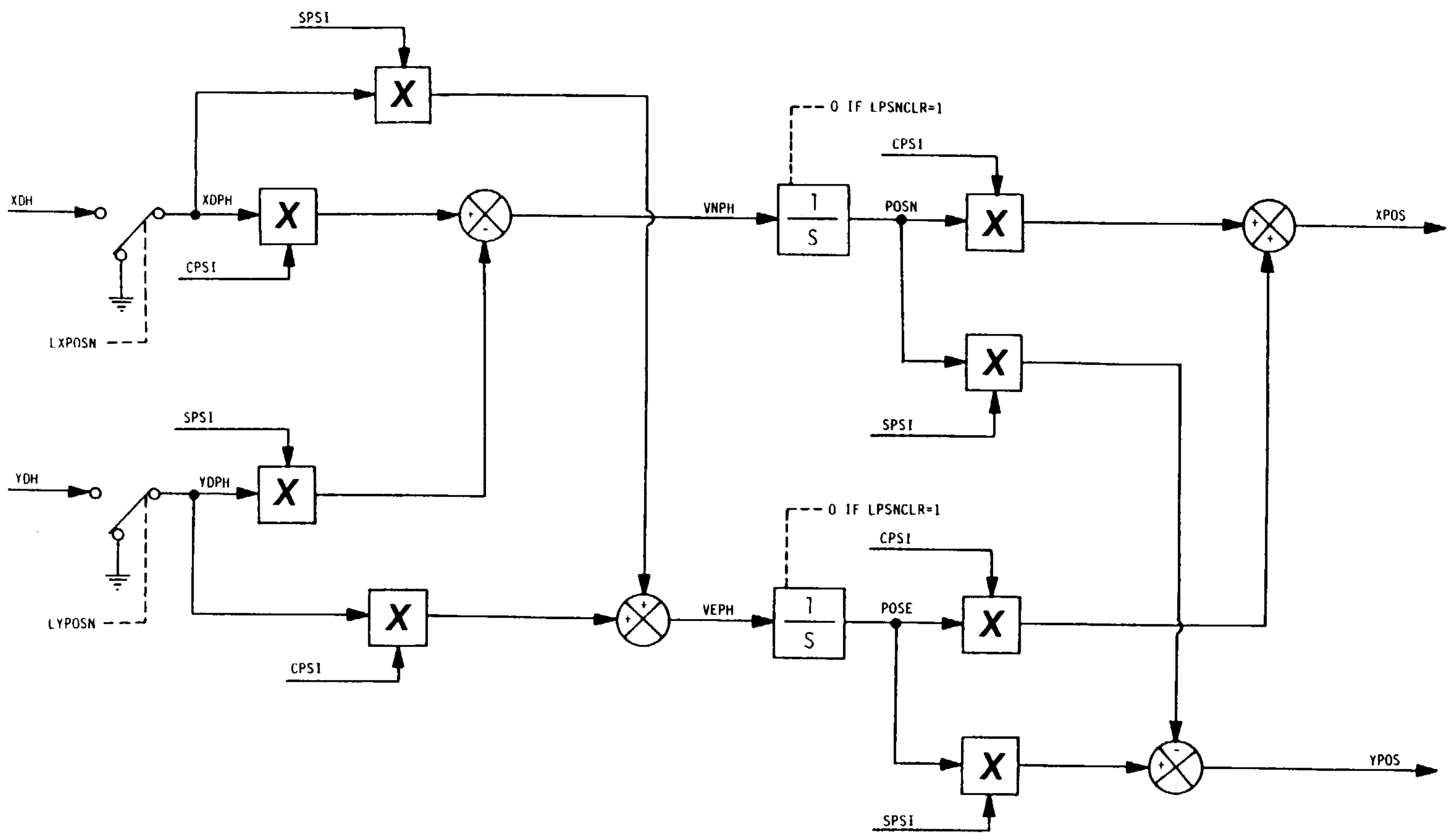
SPSI
0 IF LPSNCLR=1
CPSI
XDH
XDPH
VNPH
1/S
POSN
XPOS
CPSI
LXPOSN
SPSI
SPSI
YDH
YDPH
0 IF LPSNCLR=1
CPSI
LYPOSN
VEPH
1/S
POSE
CPSI
YPOS
SPSI
X
+
-

ALTITUDE HOLD LOGIC

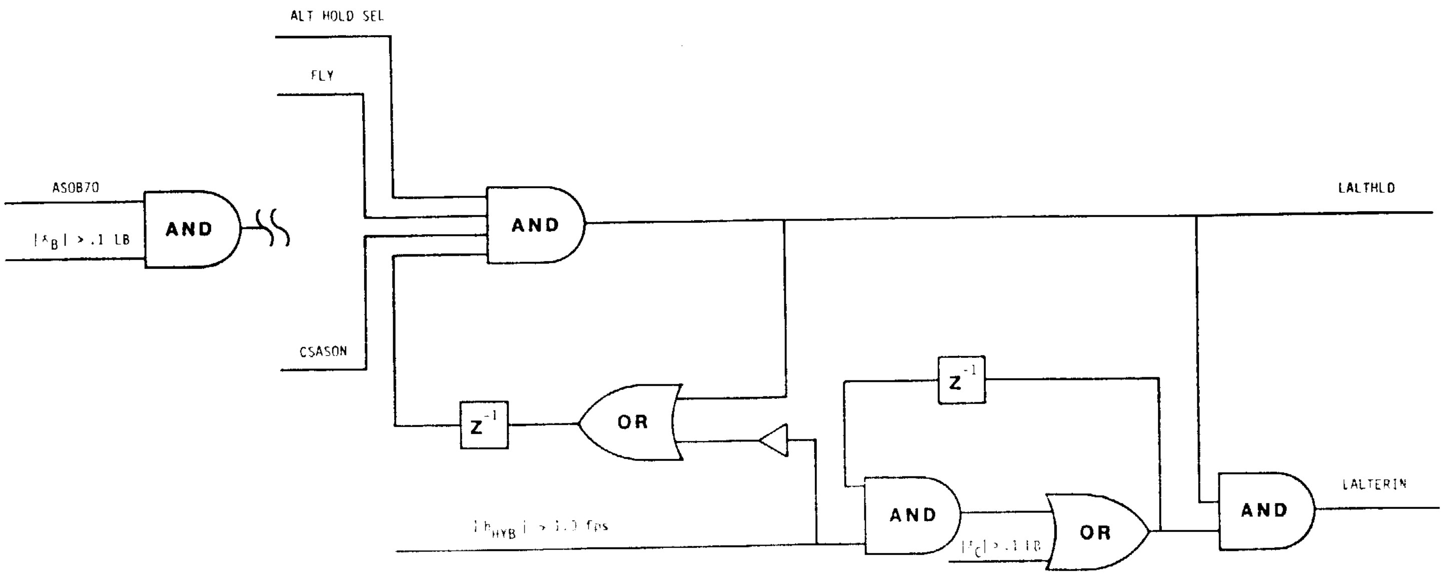
ALT HOLD SEL
FLY
ASOB70
$|x_B| > .1$ LB
AND
AND
CSASON
LALTHLD
Z^{-1}
OR
Z^{-1}
AND
OR
AND
LALTERIN
$|h_{HYB}| > 1.0$ fps
$|x_C| > .1$ LB

HEADING HOLD/TURN COORDINATION LOGIC

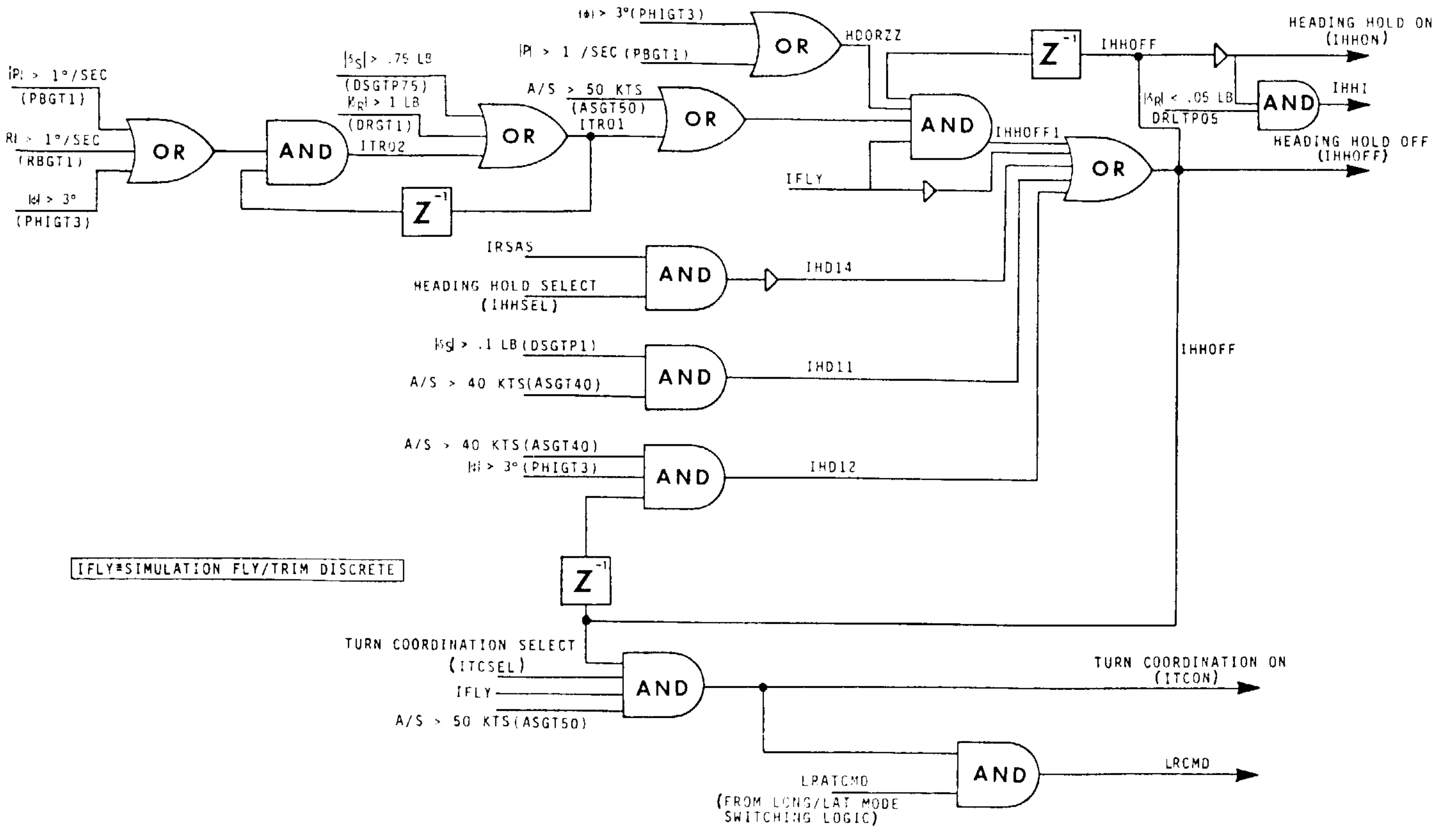

|P| > 1°/SEC
(PBGT1)
R| > 1°/SEC
(RBGT1)
|ϕ| > 3°
(PHIGT3)
OR
AND
Z⁻¹
$|\delta_S|$ > .75 LB
(DSGTP75)
$|\delta_R|$ > 1 LB
(DRGT1)
ITR02
OR
ITR01
A/S > 50 KTS
(ASGT50)
OR
|ϕ| > 3°(PHIGT3)
|P| > 1 /SEC (PBGT1)
OR
HDORZZ
AND
IHHOFF1
IFLY
Z⁻¹
IHHOFF
HEADING HOLD ON
(IHHON)
$|\delta_R|$ < .05 LB
DRLTP05
AND
IHHI
HEADING HOLD OFF
(IHHOFF)
OR
IRSAS
HEADING HOLD SELECT
(IHHSEL)
AND
IHD14
$|\delta_S|$ > .1 LB (DSGTP1)
A/S > 40 KTS(ASGT40)
AND
IHD11
A/S > 40 KTS(ASGT40)
|ϕ| > 3° (PHIGT3)
AND
IHD12
IHHOFF
IFLY≡SIMULATION FLY/TRIM DISCRETE
Z⁻¹
TURN COORDINATION SELECT
(ITCSEL)
IFLY
A/S > 50 KTS(ASGT50)
AND
TURN COORDINATION ON
(ITCON)
LPATCMD
(FROM LONG/LAT MODE
SWITCHING LOGIC)
AND
LRCMD

HOVER HOLD LOGIC

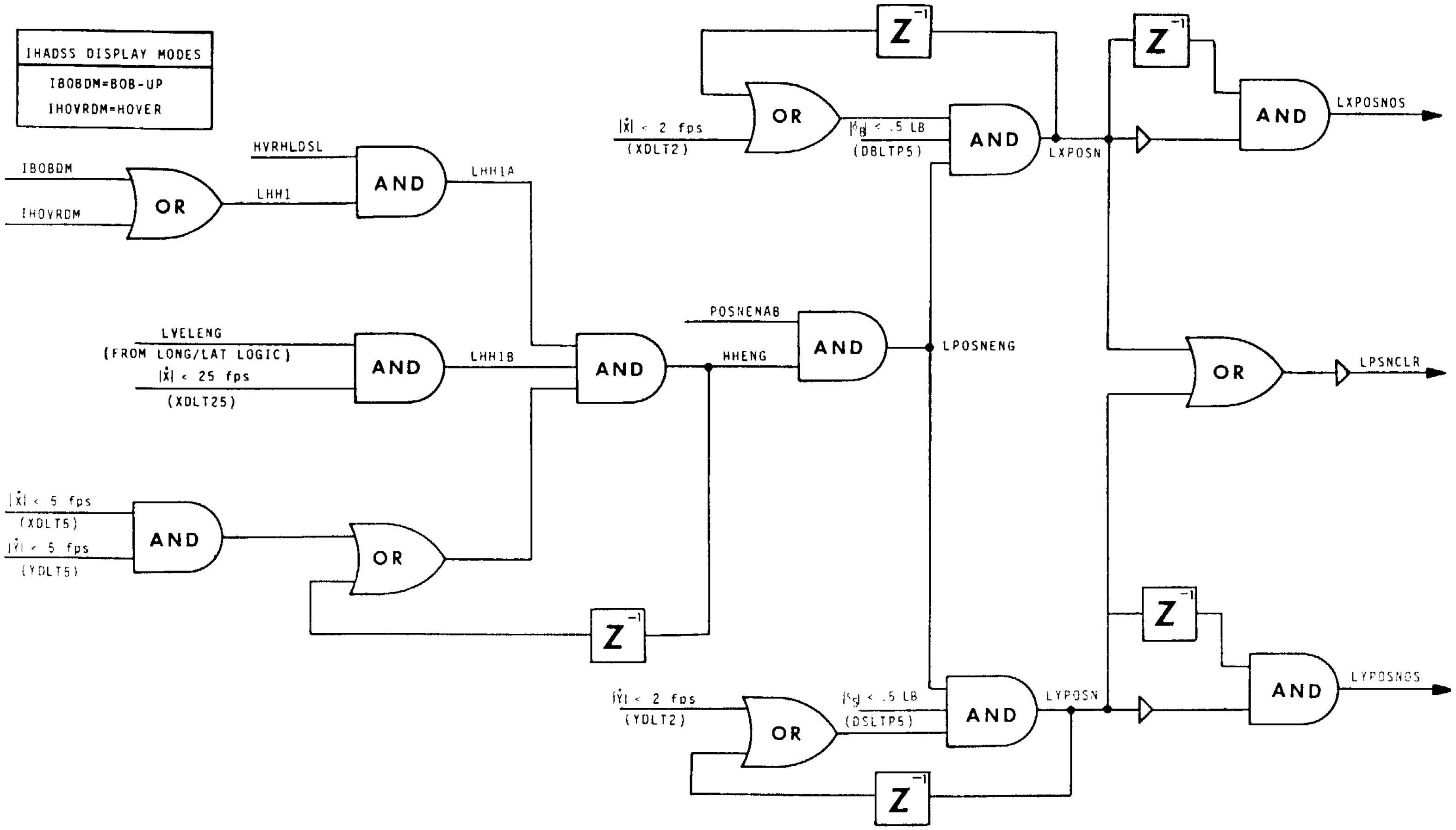
IHADSS DISPLAY MODES
IBOBDM=BOB-UP
IHOVRDM=HOVER
IBOBDM
IHOVRDM
OR
LHH1
HVRHLDSL
AND
LHH1A
LVELENG
(FROM LONG/LAT LOGIC)
$|\dot{X}| < 25$ fps
(XDLT25)
AND
LHH1B
$|\dot{X}| < 5$ fps
(XDLT5)
$|\dot{Y}| < 5$ fps
(YDLT5)
AND
OR
AND
HHENG
Z^{-1}
POSNENAB
AND
LPOSNENG
$|\dot{X}| < 2$ fps
(XDLT2)
OR
Z^{-1}
$|\delta_B| < .5$ LB
(DBLTP5)
AND
LXPOSN
$|\dot{Y}| < 2$ fps
(YDLT2)
OR
Z^{-1}
$|\delta_S| < .5$ LB
(DSLTP5)
AND
LYPOSN
Z^{-1}
AND
LXPOSNOS
OR
LPSNCLR
Z^{-1}
AND
LYPOSNOS

LONGITUDINAL/LATERAL MODE SWITCHING LOGIC

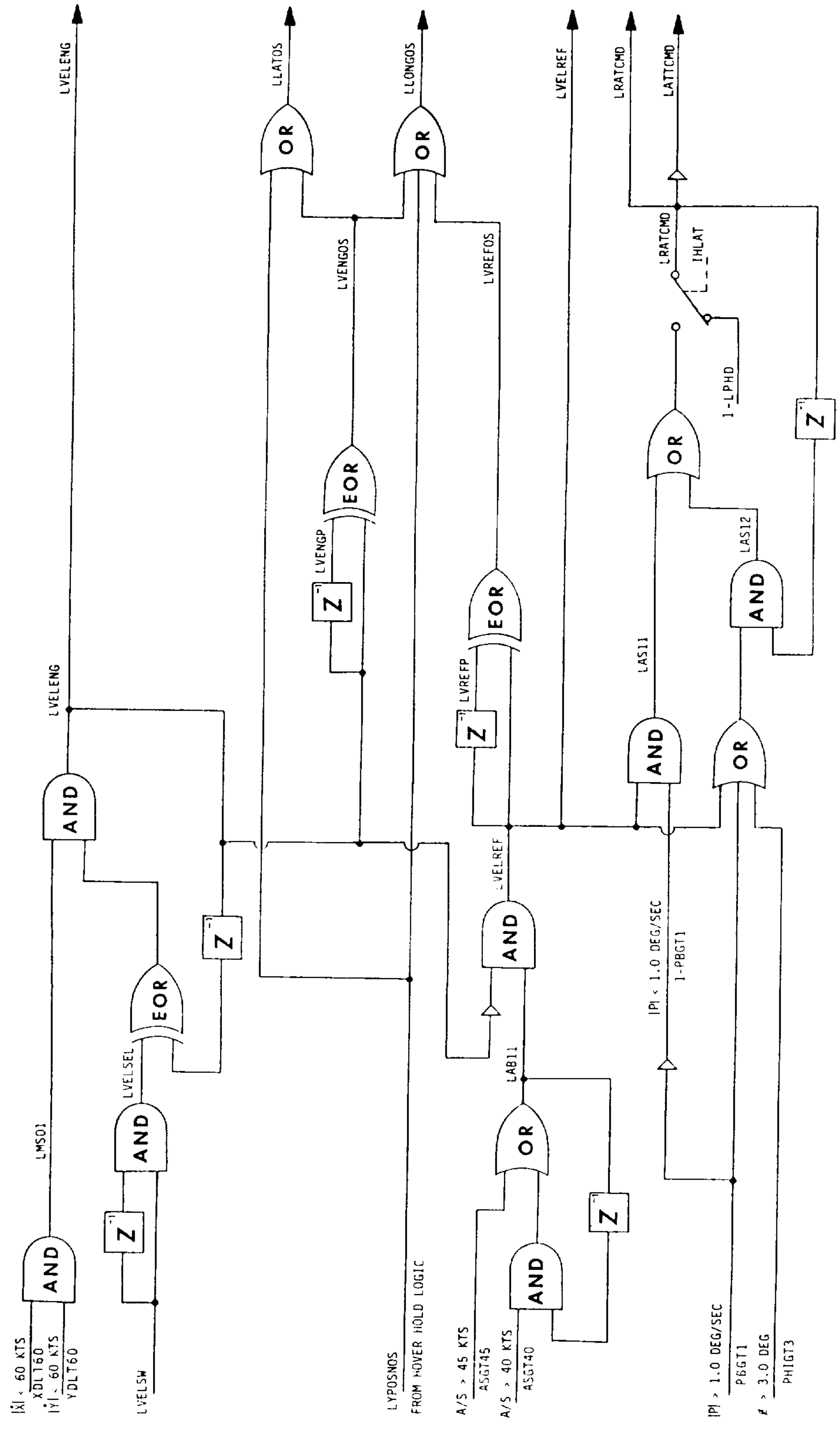
|Ẋ| < 60 KTS
XDLT60
|Ẏ| < 60 KTS
YDLT60
AND
LMS01
LVELSW
Z⁻¹
AND
LVELSEL
EOR
Z⁻¹
AND
LVELENG
LVELENG
LYPOSNOS
FROM HOVER HOLD LOGIC
A/S > 45 KTS
ASGT45
A/S > 40 KTS
ASGT40
AND
OR
Z⁻¹
LAB11
AND
LVELREF
Z⁻¹
LVREFP
EOR
LVREFOS
Z⁻¹
LVENGP
EOR
LVENGOS
OR
LLATOS
OR
LLONGOS
LVELREF
|P| > 1.0 DEG/SEC
PBGT1
ϕ > 3.0 DEG
PHIGT3
|P| < 1.0 DEG/SEC
1-PBGT1
AND
LAS11
OR
AND
LAS12
OR
1-LPHD
Z⁻¹
LRATCMD
IHLAT
LRATCMD
LATTCMD

LONGITUDINAL RATE RESPONSE

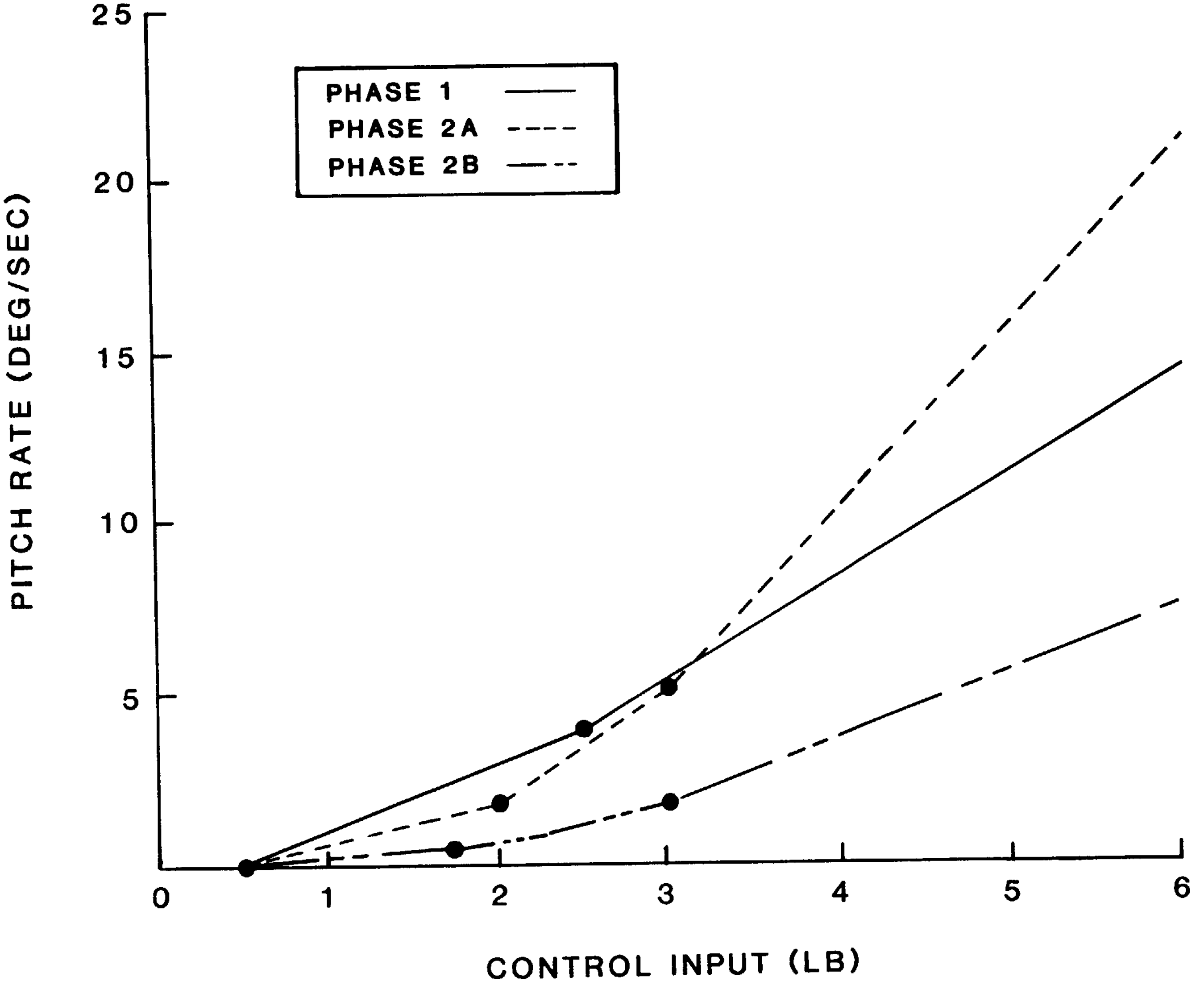

LONGITUDINAL ATTITUDE RESPONSE

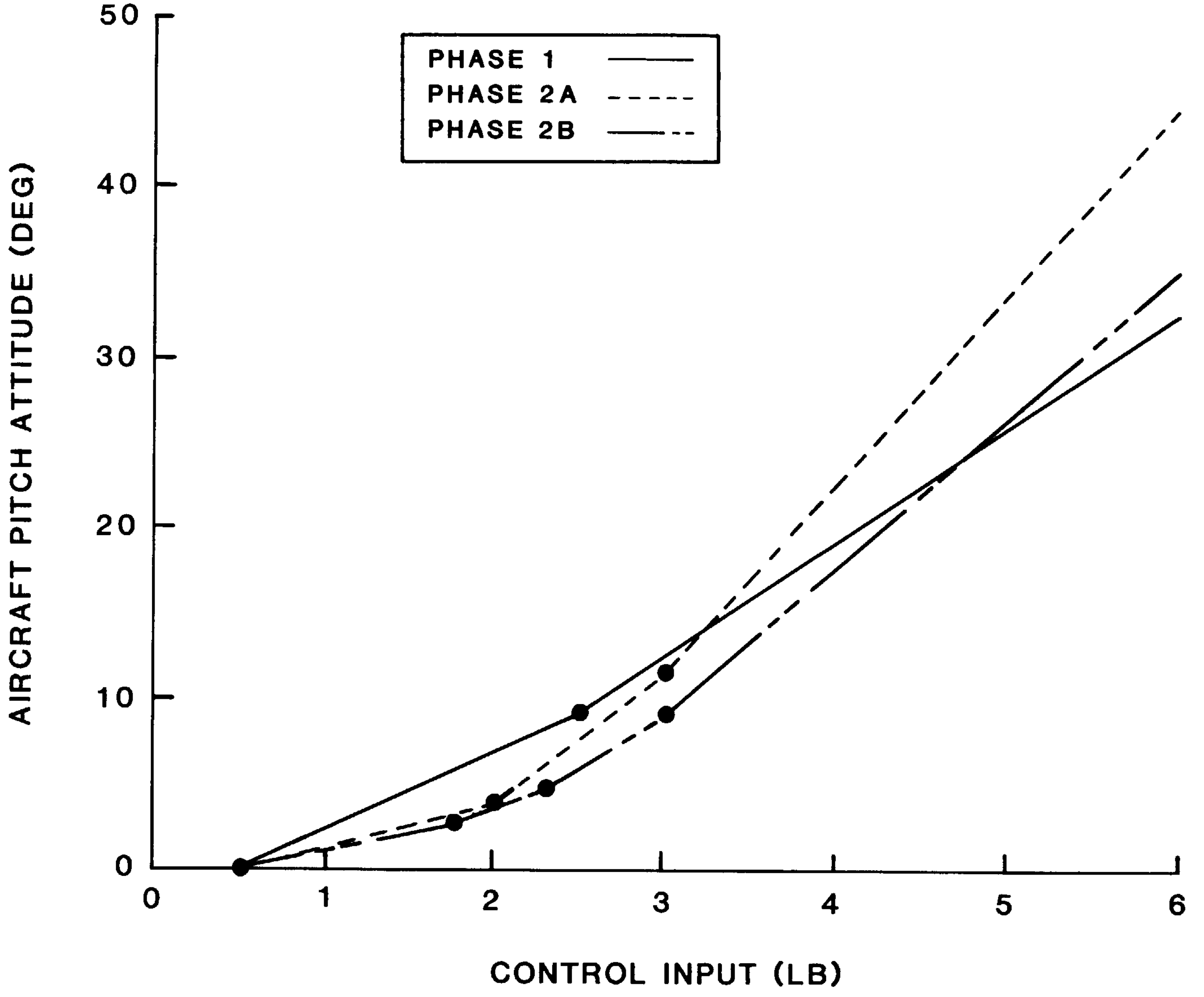

LONGITUDINAL VELOCITY RESPONSE

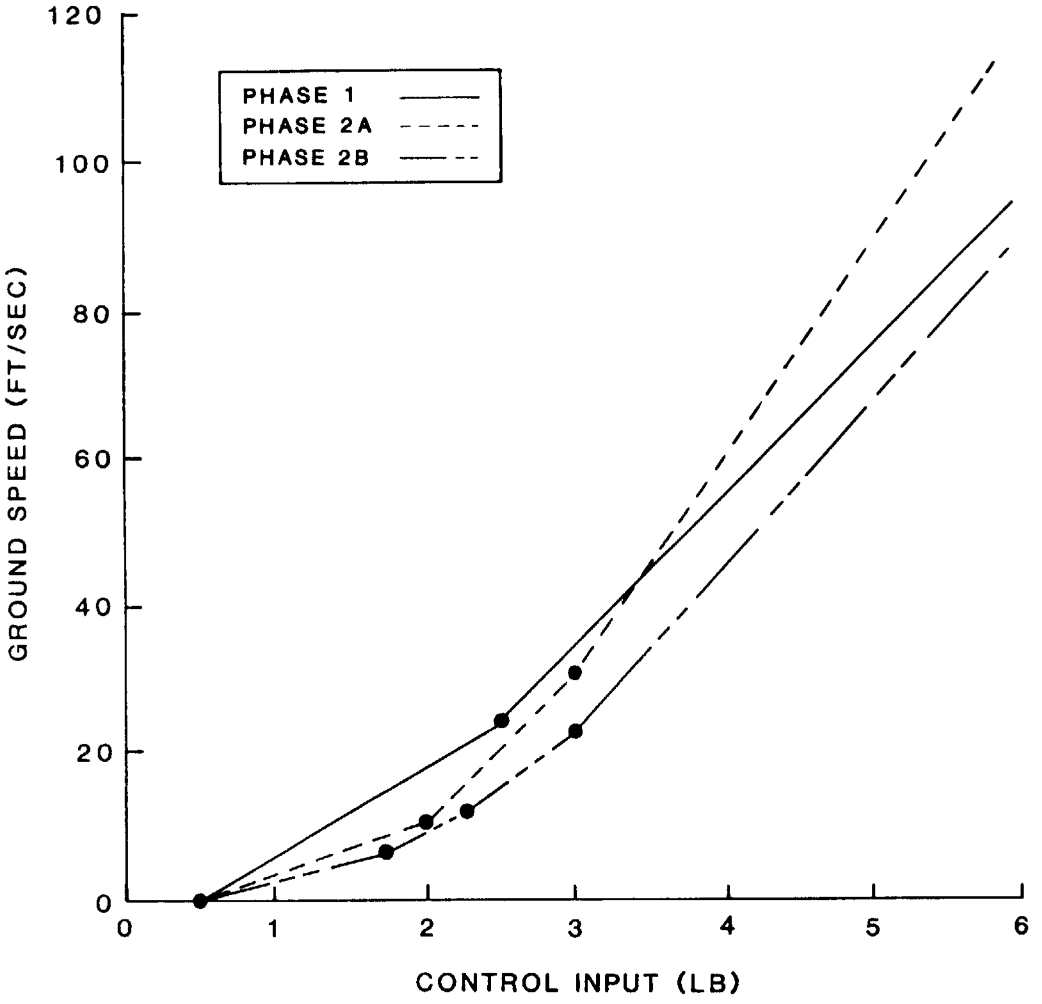

LATERAL RATE RESPONSE SENSITIVITY

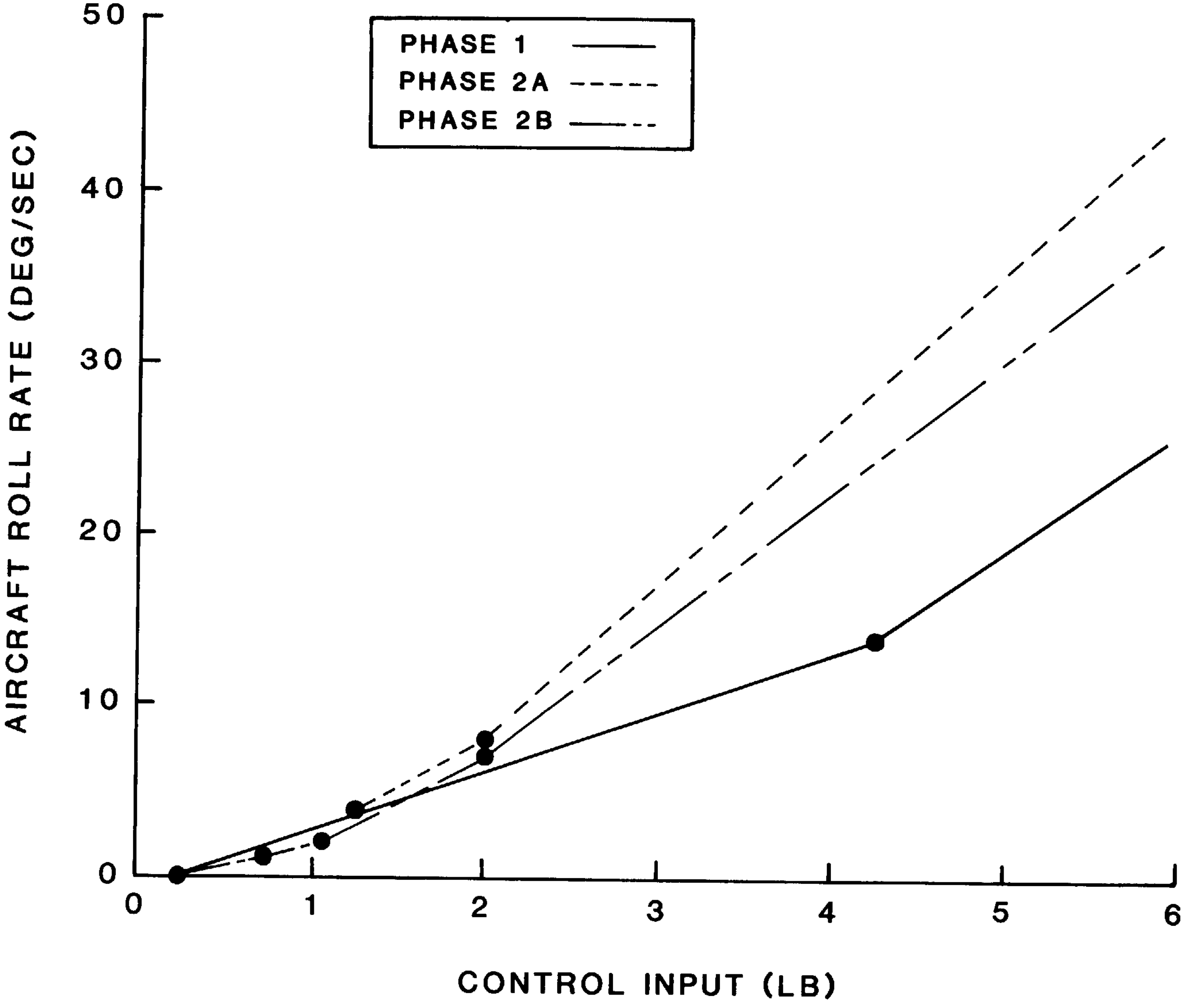

LATERAL ATTITUDE RESPONSE

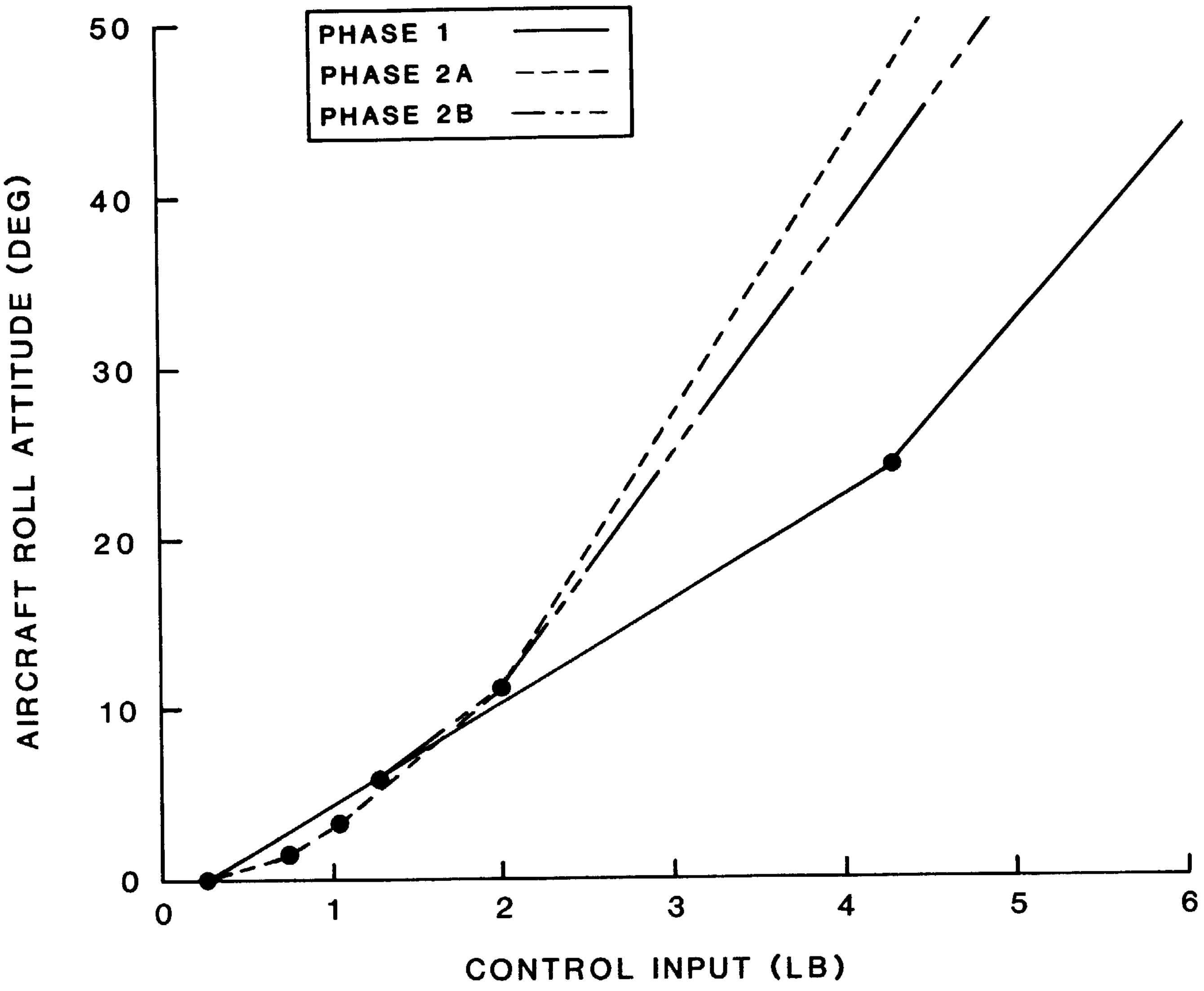

LATERAL VELOCITY RESPONSE

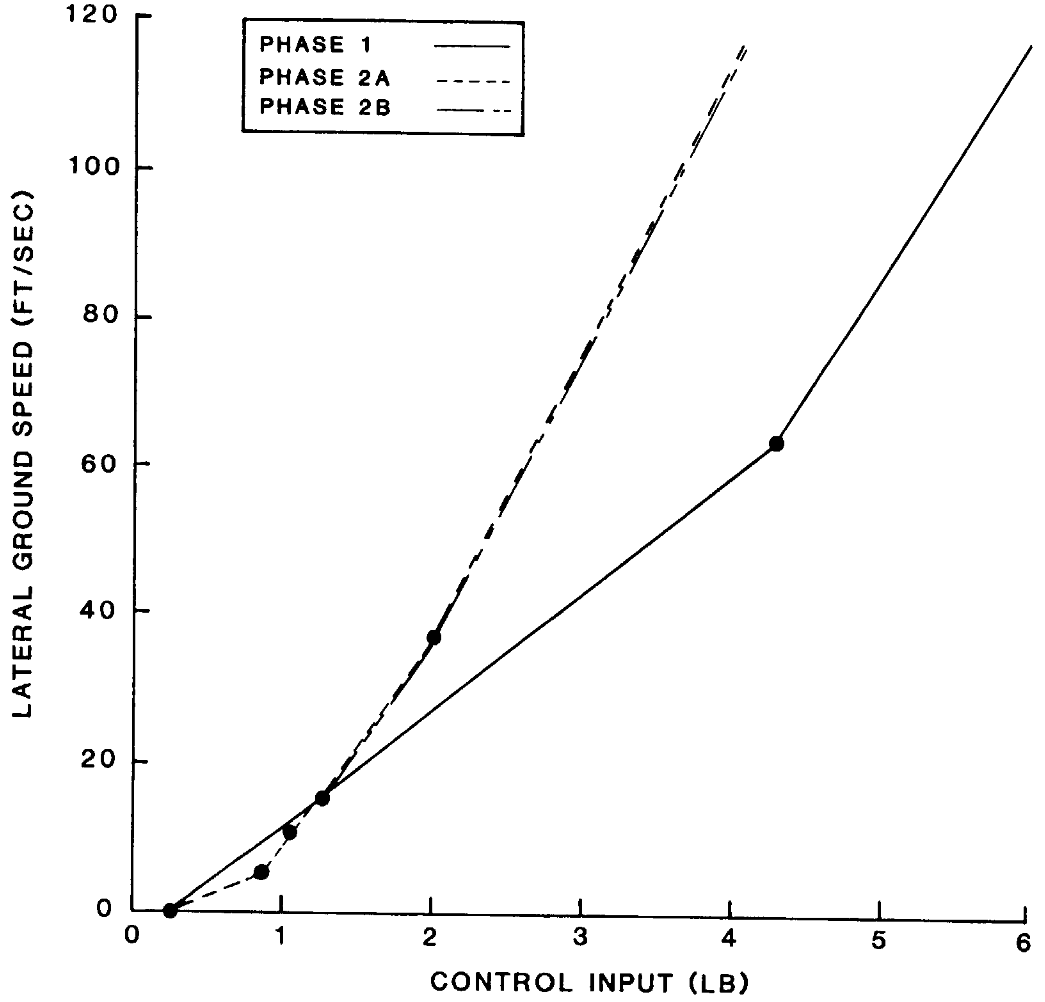

DIRECTIONAL RATE RESPONSE

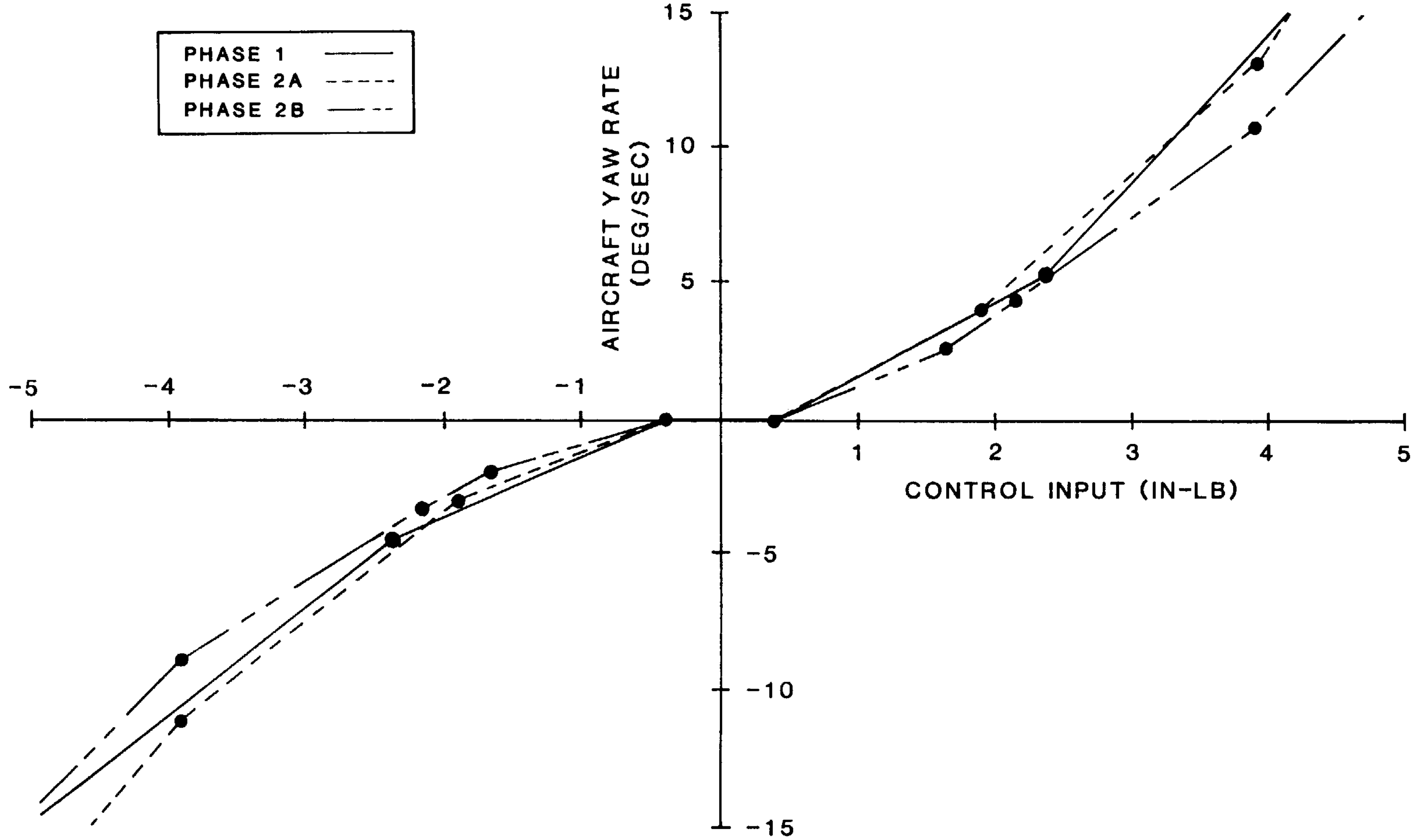

DIRECTIONAL ACCELERATION RESPONSE

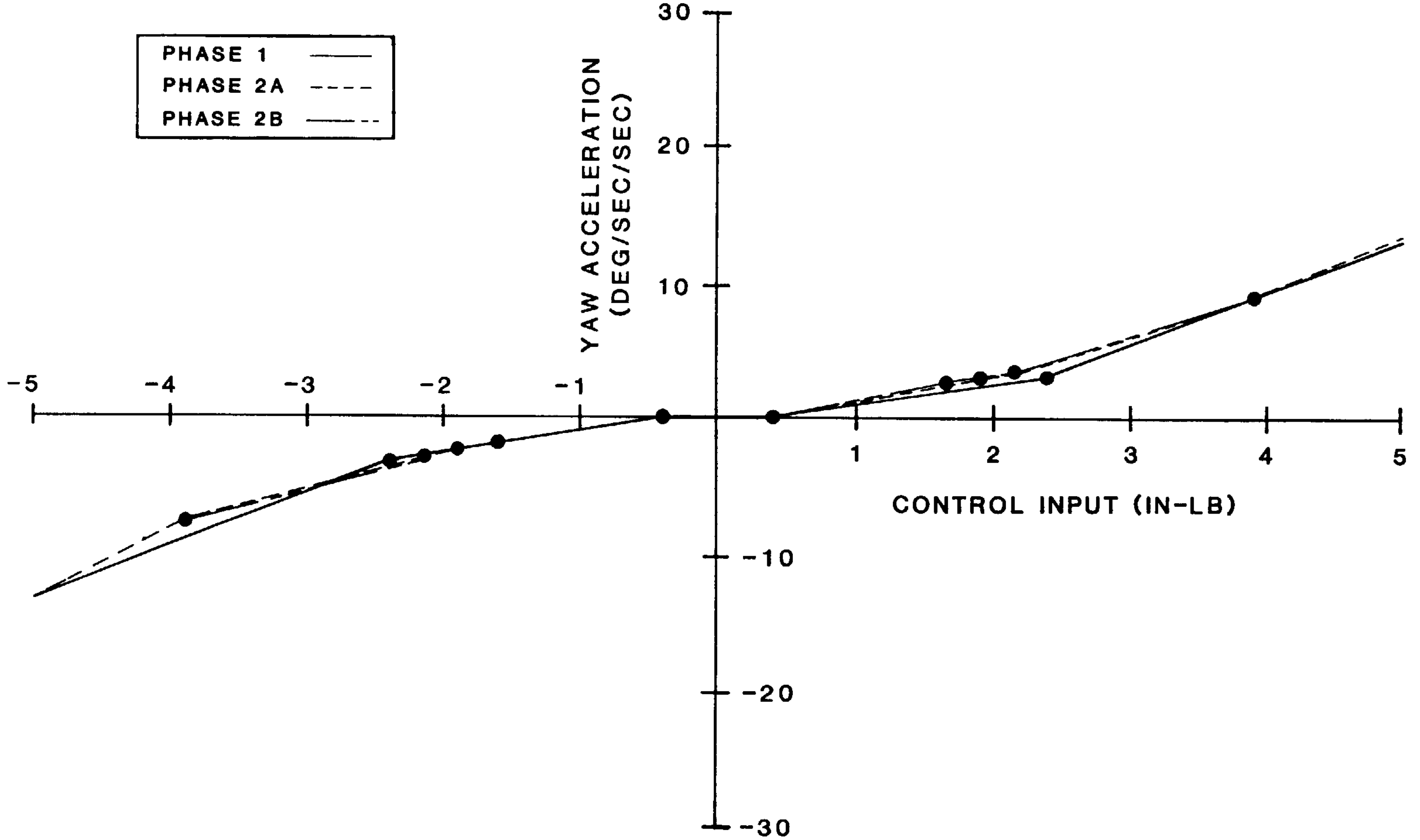

VERTICAL RATE RESPONSE

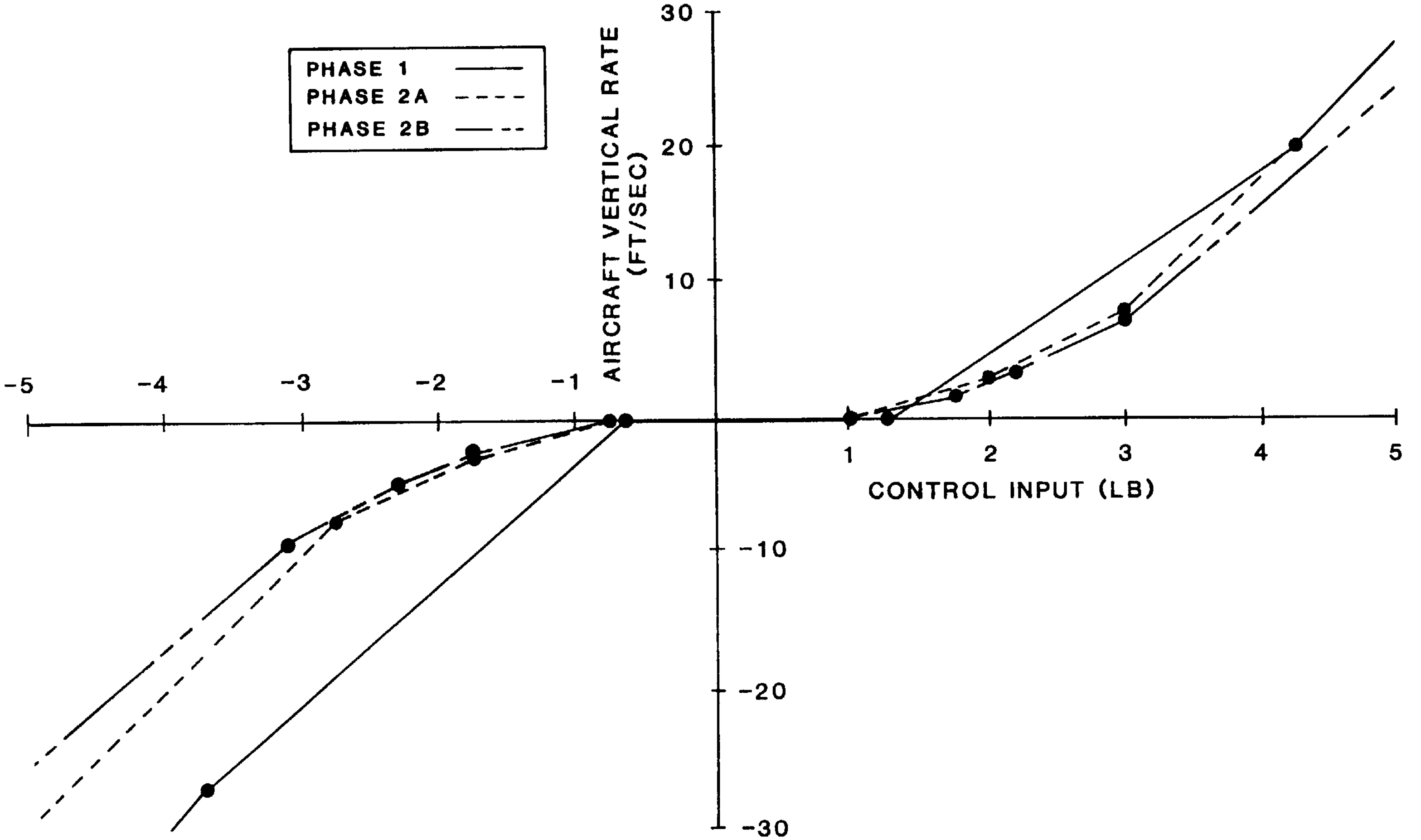

VERTICAL ACCELERATION SYSTEM

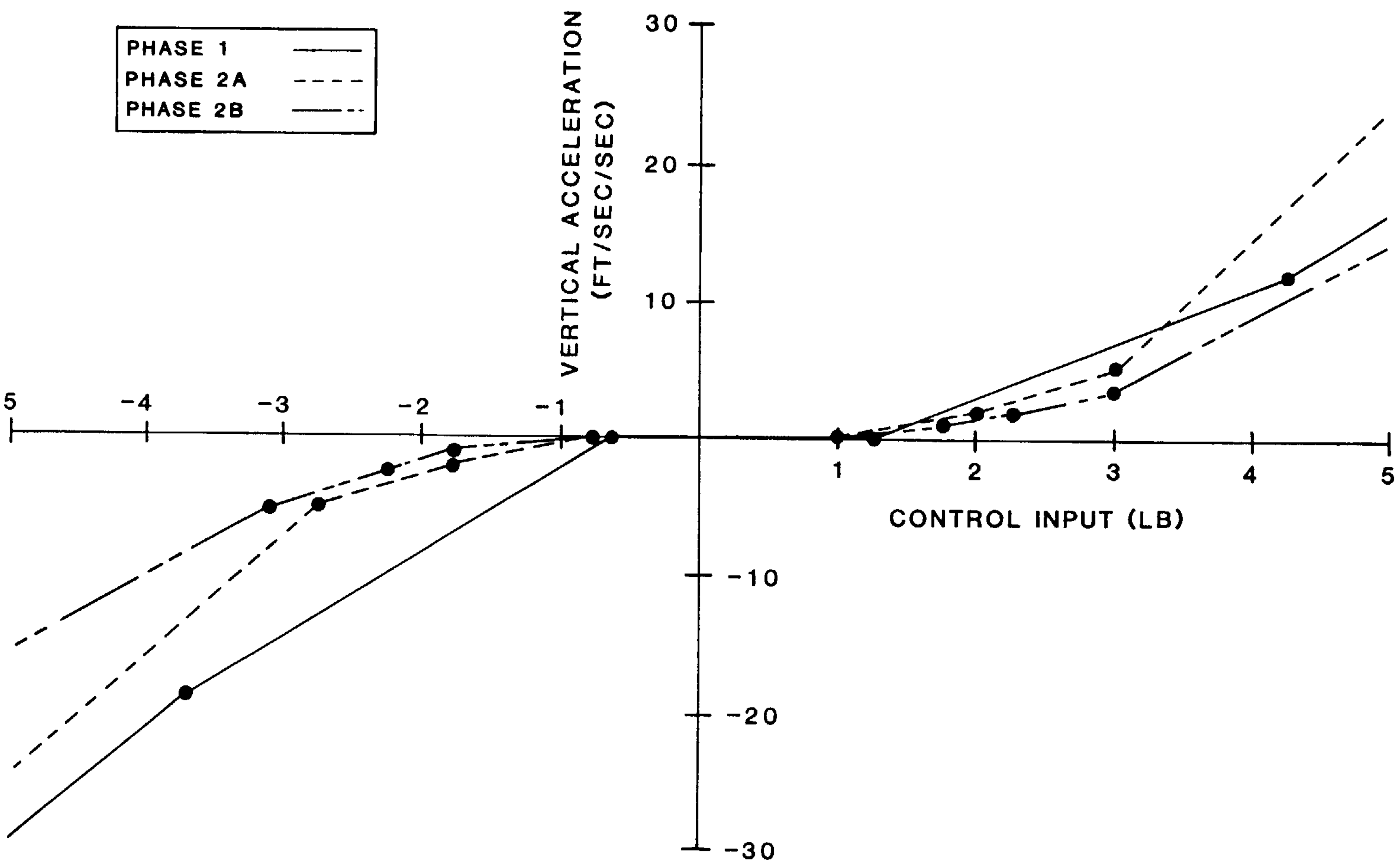

APPENDIX B

Appendix B contains trim sheets and small-perturbation stability and control derivatives which represent the UH-60A math model used in the Boeing Vertol Simulator. Trim sheets and derivatives are included for airspeeds between hover and 140 knots at 20 knot increments.

```
                                                                         UH-60A      T R I M   D A T A
    TIME-DATE       7:52      3/16/84                                              FLIGHT NO.= BASE    RUN NO.= TRIM    TAPE SEQ. NO.=      C            PAGE     1
  VTOT=     32.5 KT    U=       0.5 KT    V=       0.0 KT    W=       0.0 KT
  G.W.=  16824.9 LBS    RPM=   263.0     H=      600.0 FT    TEMP=   59.0 DG    XCG=     -9.2 IN    ZCG=     0.0 IN RHP=  1842.0
     THETA           PHI             PSI              P               Q               R              ROE          OMEGA FR        OMEGA RR
  0.51168E+01   -0.25675E+01    0.00000E+00    0.00000E+00    0.00000E+00    0.00000E+00    0.23258E-02    0.27540E+02    0.12712E+03
    DELB PLT        DELS PLT        DELR PLT        DELC PLT        DELB TOT        DELS TOT        DELR TOT        DELC TOT         H DOT
 -0.12034E-01    0.63097E-01   -0.61079E+00    0.56941E+01    0.00000E+00    0.00000E+00    0.00000E+00    0.00000E+00    0.00000E+00
    THETO FR         AICFR           BICFR          THETO TR          IXX             IYY             IZZ             IXZ           D.PRES F
  0.23011E+02   -0.11369E+01    0.16550E+01    0.23217E+02    0.56290E+04    0.40000E+05    0.37200E+05    0.16700E+04    0.35075E+01
    SIGMA FR        SIGMA RR        GAMMA FS        INCID HT        LAMDA FR        LAMDA RR          MU FR           MU RR          MACH NO.
  0.32083E-01    0.13751E+00    0.20230E-01    0.33235E+02   -0.56665E-01,  -0.34407E-01    0.11465E-02    0.19253E-02    0.49211E-01
    THRUST F        NORMAL F         SIDE F         TORQUE F        L HUB FR        M HUB FR        V TIP FR        DELTA FR          F FR
  0.16954E+05   -0.53714E+03   -0.32561E+03    0.33786E+05   -0.25934E+04   -0.48303E+04    0.73904E+03    0.10044E-01    0.29732E+07
    THRUST R        NORMAL R         SIDE R         TORQUE R        L HUB RR        M HUB RR        V TIP RR        DELTA RR          F RR
  0.11456E+04    0.17591E+00   -0.14455E+00    0.65010E+03   -0.33164E+01    0.30356E+01    0.69919E+03    0.34912E-02    0.10305E+06
     CT FR           CH FR           CY FR           CQ FR           A0 FR           A1 FR           B1 FR          Q GOV FR         CMQ FR
  0.53996E-02   -0.18591E-03   -0.11331E-03    0.43311E-03    0.31490E+01   -0.18175E+01   -0.97763E+00    0.33786E+05   -0.94342E-02
     CT RR           CH RR           CY RR           CQ RR           A0 RR           A1 RR           B1 RR          Q GOV RR         CMQ RR
  0.10602E-01    0.16230E-05   -0.13373E-05    0.10939E-02    0.10654E+01    0.11344E-01   -0.11153E-01    0.65010E+03   -0.73940E-02
     X FUSE         X H.TAIL        X V.TAIL         X F.ROT         X R.ROT          X/M            D FRFS          D FRHT          D FRRR
  0.78085E+02   -0.10564E+01   -0.57533E-03    0.14237E+04   -0.19774E+00    0.28690E+01    0.13121E+01   -0.13368E+00    0.54715E-02
     Y FUSE         Y H.TAIL        Y V.TAIL         Y F.ROT         Y R.ROT          Y/M           AICF BOD        BICF BOD        THOF BOD
  0.00000E+00    0.00000E+00   -0.30106E-02   -0.32561E+03    0.10763E+04    0.14353E+01   -0.11369E+01    0.16550E+01    0.23011E+02
     Z FUSE         Z H.TAIL        Z V.TAIL         Z F.ROT         Z R.ROT          Z/M           AICR BOD        BICR BOD        THOR BOD
  0.55586E+03   -0.16236E+01    0.00000E+00   -0.16903E+05   -0.39239E+03   -0.32010E+02    0.00000E+00    0.00000E+00    0.23963E+02
     L FUSE         L H.TAIL        L V.TAIL         L F.ROT         L R.ROT         L/IXX           LHBF BOD        LHBR BOD          PFR
 -0.20520E+01    0.00000E+00   -0.69756E-02   -0.62092E+04    0.62112E+04   -0.12392E-05   -0.25984E+04   -0.27577E+01    0.00000E+00
     M FUSE         M H.TAIL        M V.TAIL         M F.ROT         M R.ROT         M/IYY           MHBF BOD        MHBR BOD          QFR
 -0.13433E+04   -0.45511E+02    0.13342E-02    0.14142E+05   -0.12753E+05   -0.49177E-05   -0.48303E+04    0.35509E+01    0.00000E+00
     N FUSE         N H.TAIL        N V.TAIL         N F.ROT         N R.ROT         N/IZZ           A1FR BOD        A1RR BOD          PRR
  0.24452E+01    0.00000E+00    0.35372E-01    0.33033E+05   -0.33086E+05    0.13461E-05   -0.19175E+01    0.17061E-01    0.00000E+00
     BETA FS         BETA HT         BETA VT         BETA FR         BETA RR          WIHT           B1FR BOD        B1RR BOD          QRR
  0.00000E+00    0.00000E+00    0.00000E+00    0.00000E+00   -0.96932E+01    0.58117E+01   -0.97763E+00   -0.90375E-02    0.00000E+00
     ALPH FS         ALPH HT         ALPH VT          ATWFR           ATWRR           VIVT           HFR BODY        HRR BODY          LFW
 -0.39119E+02    0.12007E+03    0.51219E+01    0.00000E+00    0.00000E+00    0.00000E+00   -0.53714E+03    0.19774E+00    0.16962E+05
      VINTF           CLHT            CLVT            BTWFR           BTWRR           WIRR           YFR BODY        YRR BODY        DELCNUD
  0.41909E+02   -0.44032E+00   -0.11239E+00    0.00000E+00    0.00000E+00   -0.22931E+00   -0.32561E+03   -0.11285E+00   -0.12302E+02
      WIFS            CDHT            CDVT            TTWFR           TTWRR          AIC MEF         BIC MEF          AICRR           BICRR
 -0.54939E+02    0.94919E+00    0.21496E-01   -0.19700E+02   -0.17997E+02    0.00000E+00    0.00000E+00   -0.79430E-02    0.78129E-02
```

OF POOR QUALITY

```
UTTAS       STABILITY AND CONTROL DERIVATIVES

     G.W. = 16324.91  LBS     VEL. =     0.50  KTS     ALT. =   600.00  FT
     C.G. =    -9.20  IN      R/C  =     0.00  FPM     TEMP =    59.00  DEG

              L/IXX      M/IYY      N/IZZ       X/M        Y/M        Z/M

DELB        -0.0654    -0.3251    -0.0024     1.6300    -0.1064     0.5880
DELS         1.4593    -0.0059     0.0261     0.0070     1.0502     0.4808
DELR        -0.7777     0.0208     0.6013     0.9696    -1.4602     1.0530
DELC         0.0093    -0.0105     0.0796     0.9263     0.2124    -7.1672
P           -3.4187     0.3121    -0.1789    -1.7769    -1.5607     1.0181
Q           -1.3927    -0.5277    -0.4326     1.2256    -1.5443     1.3047
R            0.1952    -0.0621    -0.2823    -0.4804     0.3915     3.2557
U            0.0641     0.0002     0.0016    -0.0102     0.0267     0.0194
V           -0.0243     0.0122     0.0082    -0.0234    -0.0401     0.0138
W            0.0036     0.0021    -0.0010     0.0189     0.0033    -0.2461
IHT         -0.0957    -0.0083    -0.0056    -0.6400    -0.3573     6.8327
```

ORIGINAL PAGE IS
OF POOR QUALITY

```
             U T T A S        S T A B I L I T Y   A N D   C O N T R O L   D E R I V A T I V E S

             A0FR     A1BDFR    B1BDFR     LHB BDF      MHB BDF   HFR BOD      YFR BOD      THRUST F     THRUST T    LIFT HT

DELB        -0.0606  -2.9763   -0.0308      -81.85     -7910.05    -368.74      -37.14      -264.27      -19.63        0.03
DELS        -0.0583  -0.0176    1.9096     5075.23       -46.69     -18.06      567.72      -252.33      -19.68        0.00
DELR        -0.0597  -1.7930   -0.0009       -2.28     -4778.54    -521.85      -15.38      -259.29     -796.53        0.06
DELC         0.5822  -0.4357   -0.0426     -113.11     -1157.96    -267.62      -85.77      3818.91      212.72       -0.37
P           -0.1354   2.4459   -5.4947   -14624.05      6486.95     916.61     -726.01      -512.79     -101.90        0.53
Q           -0.1734  -5.5057   -2.4433    -6493.40    -14632.29    -705.66     -531.71      -773.95       79.41      -21.83
R           -0.1522   0.2928   -0.3245     -662.20      1089.86     127.51       -0.56     -1834.24      207.49       -7.20
U           -0.0021   0.0336    0.1073      285.24        89.25       0.28       15.34        -7.99       -1.39       -0.46
V            0.0016   0.1036   -0.0337      -39.60       288.65      15.52        0.03        11.70      -10.35        0.16
W            0.0236   0.0020    0.0060       15.95         5.34      -3.97       -0.74       125.67        2.72       -1.07
IHT         -0.3338   0.0434    0.0392      104.25       115.37     129.38       77.90     -3604.49     -231.53        1.60
INPUT: UZERO 20.
  F 3:
  F 3:
  F 6:
INPUT: EXEC
```

```
                                                UH-60A      T R I M   D A T A
   TIME-DATE      7:55     3/15/84                        FLIGHT NO.= BASE   RUN NO.= TRIM   TAPE SEQ. NO.=    0          PAGE    1
  VTOT=    32.2 KT    U=    20.0 KT    V=     0.0 KT    W=     2.4 KT
  G.W.=  16824.9 LBS   RPM=  263.0    H=    600.0 FT   TEMP=  59.0 DG   XCG=   -9.2 IN   ZCG=   0.0 IN RHP=  1696.2
    THETA          PHI           PSI            P             Q             R            ROE        OMEGA FR      OMEGA RR
0.69055E+01  -0.16106E+01   0.00000E+00   0.00000E+00   0.00000E+00   0.00000E+00   0.23258E-02   0.27540E+02   0.12712E+03
   DELB PLT     DELS PLT      DELR PLT      DELC PLT      DELS TOT      DELS TOT      DELR TOT      DELC TOT       H DOT
0.65270E+00  -0.11393E+01  -0.57712E+00   0.52540E+01   0.00000E+00   0.00000E+00   0.00000E+00   0.00000E+00   0.00000E+00
   THETO FR      AICFR         BICFR        THETO TR        IXX           IYY           IZZ           IXZ          D.PRES F
0.22322E+02  -0.31890E+01   0.32235E+01   0.22421E+02   0.54290E+04   0.40000E+05   0.37200E+05   0.16700E+04   0.34365E+01
   SIGMA FR     SIGMA RR      GAMMA FS      INCID HT      LAMDA FR      LAMDA RR        MU FR         MU RR        MACH NO.
0.32083E-01   0.13751E+00   0.73155E+00   0.38396E+02  -0.46291E-01  -0.78568E-01   0.45936E-01   0.56374E-01   0.48711E-01
   THRUST F     NORMAL F      SIDE F        TORQUE F      L HUB FR      M HUB FR      V TIP FR      DELTA FR        F FR
0.17004E+05  -0.98734E+03  -0.51917E+03   0.31055E+05  -0.10126E+04  -0.70406E+04   0.73904E+03   0.10048E-01   0.28738E+07
   THRUST R     NORMAL R      SIDE R        TORQUE R      L HUB RR      M HUB RR      V TIP RR      DELTA RR        F RR
0.10573E+04   0.59454E+01  -0.55926E+01   0.56740E+03  -0.14193E+03   0.12817E+03   0.69919E+03   0.54188E-02   0.10805E+06
    CT FR         CH FR         CY FR         CQ FR         A0 FR         A1 FR         B1 FR       Q GOV FR       CMO FR
0.59171E-02  -0.34357E-03  -0.19066E-03   0.40269E-03   0.30795E+01  -0.26492E+01  -0.38100E+00   0.31056E+05  -0.95167E-02
    CT RR         CH RR         CY RR         CQ RR         A0 RR         A1 RR         B1 RR       Q GOV RR       CMO RR
0.77931E-02   0.64279E-04  -0.52636E-04   0.95491E-05   0.94947E+00   0.47902E+00  -0.47322E+00   0.56749E+03  -0.68939E-02
    X FUSE      X H.TAIL      X V.TAIL      X F.ROT       X R.ROT         X/M         D FRFS        D FRHT        D FRRR
-0.37502E+02  0.24736E+03  -0.92133E+00   0.13759E+04  -0.38858E+01   0.38736E+01   0.12780E+01   0.18339E+01   0.70381E+00
    Y FUSE      Y H.TAIL      Y V.TAIL      Y F.ROT       Y R.ROT         Y/M        AICF BOD      BICF BOD      THOF BOD
0.00000E+00   0.00000E+00  -0.43170E+01  -0.51917E+03   0.99343E+03   0.39760E+00  -0.31890E+01   0.32235E+01   0.22322E+02
    Z FUSE      Z H.TAIL      Z V.TAIL      Z F.ROT       Z R.ROT         Z/M        AICR BOD      BICR BOD      THOR BOD
0.39477E+03   0.20168E+03   0.00000E+00  -0.16929E+05  -0.36345E+03  -0.31924E+02   0.00000E+00   0.00000E+00   0.23086E+02
    L FUSE      L H.TAIL      L V.TAIL      L F.ROT       L R.ROT        L/IXX        LHBF BOD      LHBR BOD        PFR
-0.87664E+02  0.00000E+00  -0.11161E+02  -0.55801E+04   0.56784E+04  -0.84125E-04  -0.10126E+04  -0.55591E+02   0.00000E+00
    M FUSE      M H.TAIL      M V.TAIL      M F.ROT       M R.ROT        M/IYY        MHBF BOD      MHBR BOD        QFR
-0.33141E+04  0.55654E+04   0.21347E+01   0.94093E+04  -0.11664E+05   0.47065E-03  -0.70406E+04   0.18298E+03   0.00000E+00
    N FUSE      N H.TAIL      N V.TAIL      N F.ROT       N R.ROT        N/IZZ        A1FR BOD      A1RR BOD        PRR
0.10446E+03   0.00000E+00   0.13637E+03   0.30130E+05  -0.30370E+05   0.34990E-06  -0.26492E+01   0.65438E+00   0.00000E+00
    BETA FS     BETA HT       BETA VT       BETA FR       BETA RR        WIHT         B1FR BOD      B1RR BOD        QRR
0.00000E+00   0.00000E+00   0.00000E+00   0.00000E+00  -0.31017E+02  -0.66993E+02  -0.38100E+00  -0.15872E+00   0.00000E+00
    ALPH FS     ALPH HT       ALPH VT        ATWFR         ATWRR         VIVT         HFR BODY      HRR BODY        LFW
-0.51531E+02 -0.22566E+02   0.69022E+01   0.00000E+00   0.00000E+00   0.00000E+00  -0.98734E+03   0.38856E+01   0.17032E+05
    VINTF         CLHT          CLVT         BTWFR         BTWRR          WIRR        YFR BODY      YRR BODY       DELONUD
0.36530E+02  -0.11747E+01  -0.11239E+00   0.00000E+00   0.00000E+00  -0.25710E+02  -0.51917E+03  -0.12999E+01   0.63517E+02
     WIFS         CDHT          CDVT         TTWFR         TTWRR        AIC MEF       BIC MEF         AICRR         BICRR
-0.46684E+02  0.22733E+00   0.21496E-01  -0.19700E+02  -0.17997E+02   0.00000E+00   0.00000E+00  -0.33542E+00   0.33136E+00
```

ORIGINAL PAGE IS
OF POOR QUALITY

```
UTTAS        STABILITY AND CONTROL DERIVATIVES

       G.W. = 16824.91  LBS    VEL. =   20.00  KTS    ALT. =   600.00  FT
       C.G. =    -9.20  IN     R/C =     0.00  FPM    TEMP =    59.00  DEG

              L/IXX     M/IYY     N/IZZ      X/M       Y/M       Z/M

DELB        -0.0721   -0.3290    0.0013    1.4863   -0.1043    1.3859
DELS         1.5047    0.0031   -0.0498   -0.0094    1.0674    0.4853
DELR        -0.7296   -0.0109    0.5671    0.8801   -1.3748    1.4366
DELC         0.1673   -0.0248    0.0636    0.9745    0.2737   -6.8357
P           -3.5017    0.2999    0.1014   -1.7222   -1.8107    0.3253
Q           -1.6346   -0.7677   -0.4056    0.5118   -1.5740    1.9040
R            0.3549   -0.0472   -0.3776   -0.4933    0.7369    2.8052
U            0.0173    0.0094   -0.0026    0.0144    0.0144   -0.1346
V           -0.0263    0.0042    0.0114   -0.0452   -0.0501   -0.0524
W            0.0119    0.0120   -0.0008    0.0604    0.0092   -0.3194
IHT          0.1348   -0.5218    0.0099   -1.3990   -0.1250    4.2948
```

ORIGINAL PAGE IS
OF POOR QUALITY

```
      UTTAS       STABILITY AND CONTROL DERIVATIVES

              ADFR     A1BDFR    B1BDFR     LHB BDF    MHB BDF   HFR BOD    YFR BOD   THRUST F   THRUST T    LIFT HT

DELB        -0.1410   -2.9739   -0.0443     -119.13   -7903.71   -812.93    -37.14    -697.02     -13.57       0.84
DELS        -0.0551   -0.0025    1.9234     5125.04      -6.61     -1.35    575.59    -240.23     -18.49      14.69
DELR        -0.1051   -1.7984   -0.0026       -6.36   -4752.92   -485.79    -12.42    -506.21    -752.94     -24.32
DELC         0.3457   -0.2395    0.2108      560.26    -636.59   -340.83    -46.54    3626.46     204.31     -12.29
P           -0.0724    2.3149   -5.4149   -14406.00    6130.02    391.15   -335.98    -190.35    -118.36     -22.60
Q           -0.2643   -5.4424   -1.9759    -5250.96  -14464.06   -765.56   -330.48   -1296.72       7.76    -355.04
R           -0.1045    0.3065   -0.2351     -543.64    1311.34    182.09     30.21   -1599.79     302.80      20.33
U            0.0122    0.0080    0.0233       61.31      74.51      3.94      5.54      70.14       2.49       7.40
V            0.0033    0.0799   -0.0344      -91.46     212.40     12.75     -2.13      20.44     -10.90      -9.33
W            0.0324    0.0061    0.0137       36.50      16.27    -10.07      5.51     171.37      -0.74       9.31
IHT         -0.7177    0.2657    0.2301      744.41     706.13    294.03    183.15   -3069.69    -264.36    -802.86
INPUT: UZERO 40.
  F 3:
  F 3:
  F 6:
INPUT: EXEC
```

```
                                                UH-60A      T R I M   D A T A
  TIME-DATE     7:58    3/16/84                              FLIGHT NO.= BASE   RUN NO.= TRIM   TAPE SEQ. NO.=    0         PAGE     1
 VTOT=    41.4 KT   U=    40.0 KT    V=     0.0 KT    W=     3.9 KT
 G.W.=  16824.9 LBS    RPM=  263.0    H=    600.0 FT   TEMP=  59.0 DG    XCG=   -9.2 IN    ZCG=    0.0 IN RHP=  1284.3
   THETA             PHI               PSI              P                 Q                 R                ROE              OMEGA FR          OMEGA RR
 0.54968E+01     -0.12937E+01      0.00000E+00      0.00000E+00      0.00000E+00      0.00000E+00      0.23258E-02      0.27540E+02      0.12712E+03
   DELB PLT          DELS PLT          DELR PLT         DELC PLT          DELB TOT          DELS TOT         DELR TOT         DELC TOT          H DOT
 0.30346E+00     -0.99936E+00     -0.33571E+00      0.44267E+01      0.00000E+00      0.00000E+00      0.00000E+00      0.00000E+00      0.00000E+00
   THETO FR          AICFR             BICFR            THETO TR          IXX               IYY              IZZ              IXZ               D.PRES F
 0.20980E+02     -0.29772E+01      0.37300E+01      0.19942E+02      0.56290E+04      0.40000E+05      0.37200E+05      0.16700E+04      0.56769E+01
   SIGMA FR          SIGMA RR          GAMMA FS         INCID HT          LAMDA FR          LAMDA RR         MU FR            MU RR             MACH NO.
 0.32093E-01      0.15751E+00      0.12644E+01      0.34905E+02     -0.29032E-01     -0.58330E-01      0.91759E-01      0.10555E+00      0.62607E-01
   THRUST F          NORMAL F          SIDE F           TORQUE F          L HUB FR          M HUB FR         V TIP FR         DELTA FR          F FR
 0.16772E+05     -0.35976E+03     -0.38436E+03      0.23965E+05     -0.75831E+03     -0.68061E+04      0.73904E+03      0.10027E-01      0.28738E+07
   THRUST R          NORMAL R          SIDE R           TORQUE R          L HUB RR          M HUB RR         V TIP RR         DELTA RR          F RR
 0.33156E+03      0.84673E+01     -0.67274E+01      0.36709E+03     -0.20751E+03      0.17723E+03      0.69919E+03      0.32532E-02      0.10805E+06
   CT FR             CH FR             CY FR            CQ FR             A0 FR             A1 FR            B1 FR            Q GOV FR          CMO FR
 0.58361E-02     -0.29917E-03     -0.13375E-03      0.31075E-03      0.28669E+01     -0.25609E+01     -0.28552E+00      0.23965E+05     -0.93667E-02
   CT RR             CH RR             CY RR            CQ RR             A0 RR             A1 RR            B1 RR            Q GOV RR          CMO RR
 0.76960E-02      0.73364E-04     -0.62261E-04      0.61771E-03      0.63706E+00      0.66260E+00     -0.66335E+00      0.36709E+03     -0.57383E-02
   X FUSE            X H.TAIL          X V.TAIL         X F.ROT           X R.ROT           X/M              D FRFS           D FRHT            D FRRR
-0.14912E+03      0.35638E+02     -0.36853E+01      0.17363E+04     -0.10459E+02      0.30816E+01      0.99538E+00      0.23913E+01      0.15611E+01
   Y FUSE            Y H.TAIL          Y V.TAIL         Y F.ROT           Y R.ROT           Y/M              AICF BOD         BICF BOD          THOF BOD
 0.13364E+01      0.00000E+00     -0.19268E+02     -0.38436E+03      0.78035E+03      0.72295E+00     -0.29772E+01      0.37300E+01      0.20980E+02
   Z FUSE            Z H.TAIL          Z V.TAIL         Z F.ROT           Z R.ROT           Z/M              AICR BOD         BICR BOD          THOR BOD
 0.18005E+03      0.67696E+02      0.00000E+00     -0.16704E+05     -0.28734E+03     -0.32014E+02      0.00000E+00      0.00000E+00      0.20388E+02
   L FUSE            L H.TAIL          L V.TAIL         L F.ROT           L R.ROT           L/IXX            LHBF BOD         LHBR BOD          PFR
-0.14746E+03      0.00000E+00     -0.44644E+02     -0.41912E+04      0.43833E+04     -0.20141E-05     -0.75881E+03     -0.11865E+03      0.00000E+00
   M FUSE            M H.TAIL          M V.TAIL         M F.ROT           M R.ROT           M/IYY            MHBF BOD         MHBR BOD          QFR
-0.28949E+04      0.19007E+04      0.85339E+01      0.10075E+05     -0.90890E+04     -0.37282E-05     -0.68061E+04      0.24575E+03      0.00000E+00
   N FUSE            N H.TAIL          N V.TAIL         N F.ROT           N R.ROT           N/IZZ            A1FR BOD         A1RR BOD          PRR
-0.39533E+02      0.00000E+00      0.54549E+03      0.23277E+05     -0.23733E+05     -0.65629E-07     -0.25609E+01      0.37352E+00      0.00000E+00
   BETA FS           BETA HT           BETA VT          BETA FR           BETA RR           WIHT             B1FR BOD         B1RR BOD          QRR
 0.00000E+00      0.00000E+00      0.00000E+00      0.00000E+00     -0.23729E+02     -0.58381E+02     -0.28552E+00     -0.34063E+00      0.00000E+00
   ALPH FS           ALPH HT           ALPH VT          ATWFR             ATWRR             VIVT             HFR BODY         HRR BODY          LFW
-0.14759E+02     -0.26150E+01      0.54981E+01      0.00000E+00      0.00000E+00      0.00000E+00     -0.85976E+03      0.10459E+02      0.16793E+05
   VINTF             CLHT              CLVT             BTWFR             BTWRR             WIRR             YFR BODY         YRR BODY          DELONUD
 0.24414E+02     -0.17656E+00     -0.11239E+00      0.00000E+00      0.00000E+00     -0.33112E+02     -0.38436E+03     -0.27513E+01      0.12011E+02
   WIFS              CDHT              CDVT             TTWFR             TTWRR             AIC MEF          BIC MEF          AICRR             BICRR
-0.24301E+02      0.18717E-01      0.21496E-01     -0.19700E+02     -0.17997E+02      0.00000E+00      0.00000E+00     -0.46396E+00      0.46449E+00
```

```
U T T A S          S T A B I L I T Y   A N D   C O N T R O L   D E R I V A T I V E S

      G.W. = 16324.91  LBS      VEL. =     40.00  KTS      ALT. =   600.00  FT
      C.G. =     -9.20  IN      R/C =       0.00  FPM      TEMP =    59.00  DEG


              L/IXX      M/IYY      N/IZZ      X/M        Y/M        Z/M

DELB         -0.1393    -0.3345     0.0121     1.2134    -0.1229     2.1593
DELS          1.4719     0.0098    -0.0411    -0.0054     1.0371     0.4993
DELR         -0.7540    -0.0623     0.5635     0.6926    -1.3643     1.8502
DELC          0.3418     0.1394     0.0314     1.2206     0.3747    -6.6236
P            -3.7936     0.2447     0.0707    -1.5370    -2.2409    -0.1966
Q            -1.4657    -1.0106    -0.3777     0.7963    -1.3739     1.3705
R             0.3944    -0.1231    -0.4957    -0.5307     0.9730     2.3014
U            -0.0021    -0.0047    -0.0035    -0.0315     0.0022    -0.1168
V            -0.0267    -0.0001     0.0121    -0.0256    -0.0673    -0.0410
W             0.0294     0.0047    -0.0040     0.0436     0.0179    -0.5104
IHT          -0.0038    -1.0592     0.0206    -2.6809    -0.1553     2.2341
```

ORIGINAL PAGE IS
OF POOR QUALITY

```
                 U T T A S          S T A B I L I T Y   A N D   C O N T R O L   D E R I V A T I V E S

                 ACFR     A1BDFR     B1BDFR     LHB BDF     MHB BDF    HFR BDD     YFR BDD     THRUST F    THRUST T     LIFT HT

DELB          -0.2302   -3.0103   -0.1656     -440.11    -8001.73    -746.76      -54.30    -1177.16      -10.36      -67.69
DELS          -0.0540   -0.0139    1.8993     5049.00      -36.77       2.20      555.40     -241.73      -13.83       18.86
DELP          -0.1564   -1.8113   -0.0818     -217.42    -4813.83    -449.77      -25.04     -785.82     -734.83      -83.17
DELC           0.3546   -0.0544    0.4735     1258.44     -144.63    -289.54       18.71     3680.73      188.39      194.29
P             -0.0234    2.0535   -5.3545   -14244.29     5435.92     772.50    -1042.52       51.76     -130.85      -63.02
Q             -0.2599   -5.4635   -1.8076    -4304.10   -14520.20    -953.96     -770.68    -1325.10       54.22     -642.28
R             -0.0722    0.2357   -0.3229     -790.96     1107.93     157.33      -17.18    -1421.07      415.60      -46.31
U              0.0073    0.0224   -0.0049      -25.34       59.43       6.87       -1.95       47.57        4.02      -10.34
V              0.0019    0.0305   -0.0249      -56.31      102.42       6.55       -4.72       12.91      -13.02      -11.29
W              0.0431    0.0126    0.0337       89.65       33.50     -14.39       10.42      253.52       -1.13       -6.93
IHT           -0.6293    0.1203    0.0351       93.29      320.95     228.18      107.52    -2705.66     -200.89    -1543.19
INPUT: UZERO 60.
    F 3:
    F 3:
    F 6:
INPUT: EXEC
```

```
                                          UH-60A      T R I M   D A T A
  TIME-DATE      8: 2    3/16/84                      FLIGHT NO.= BASE   RUN NO.= TRIM   TAPE SEQ. NO.=    0         PAGE    1
 VTOT=   60.8 KT   U=   60.0 KT   V=    7.6 KT   W=    2.3 KT
 G.W.=  16824.9 LBS   RPM=  263.0   H=   600.0 FT   TEMP=  59.0 DG   XCG=   -9.2 IN   ZCG=   0.0 IN RHP=  1114.3
   THETA          PHI           PSI            P              Q              R             ROE         OMEGA FR      OMEGA RR
0.21814E+01   0.00000E+00  -0.71779E+01   0.00000E+00   0.00000E+00   0.00000E+00   0.23253E-02   0.27540E+02   0.12712E+03
  DELB PLT      DELS PLT      DELR PLT      DELC PLT      DELB TOT      DELS TOT      DELR TOT      DELC TOT        H DOT
0.50314E+00  -0.58097E+00  -0.39960E+00   0.40030E+01   0.00000E+00   0.00000E+00   0.00000E+00   0.00000E+00   0.00000E+00
  THETO FR       AICFR         BICFR        THETO TR        IXX           IYY           IZZ           IXZ         D.PRES F
0.20301E+02  -0.25127E+01   0.23740E+01   0.19683E+02   0.56290E+04   0.40000E+05   0.37200E+05   0.14700E+04   0.12269E+02
  SIGMA FR      SIGMA RR      GAMMA FS      INCID HT      LAMDA FR      LAMDA RR       MU FR         MU RR        MACH NO.
0.32093E-01   0.18751E+00   0.13975E+01   0.21724E+02  -0.24207E-01  -0.58654E-01   0.13829E+00   0.14704E+00   0.92039E-01
  THRUST F      NORMAL F       SIDE F       TORQUE F      L HUB FR      M HUB FR      V TIP FR      DELTA FR        F FR
0.16476E+05  -0.17712E+03  -0.36232E+03   0.20705E+05  -0.12413E+04  -0.15201E+04   0.73904E+03   0.99995E-02   0.28738E+07
  THRUST R      NORMAL R       SIDE R       TORQUE R      L HUB RR      M HUB RR      V TIP RR      DELTA RR        F RR
0.76974E+03   0.99639E+01  -0.73602E+01   0.33574E+05  -0.27403E+03   0.23097E+03   0.69919E+03   0.92217E-02   0.10305E+06
   CT FR         CH FR         CY FR         CQ FR         A0 FR         A1 FR         B1 FR        Q GOV FR       CMQ FR
0.57333E-02  -0.61632E-04  -0.10503E-03   0.26546E-03   0.26849E+01  -0.57195E+00  -0.46706E+00   0.20705E+05  -0.91793E-02
   CT RR         CH RR         CY RR         CQ RR         A0 RR         A1 RR         B1 RR        Q GOV RR       CMQ RR
0.71238E-02   0.92447E-04  -0.72745E-04   0.56496E-03   0.55122E+00   0.36365E+00  -0.37245E+00   0.33573E+03  -0.55323E-02
   X FUSE       X H.TAIL      X V.TAIL      X F.ROT       X R.ROT         X/M          D FRFS        D FRHT        D FRRR
-0.34953E+03 -0.86091E+02   0.36003E+01   0.10629E+04  -0.11170E+02   0.12232E+01   0.69493E+00   0.18655E+01   0.16381E+01
   Y FUSE       Y H.TAIL      Y V.TAIL      Y F.ROT       Y R.ROT         Y/M         AICF BOD      BICF BOD      THOF BOD
-0.24015E+03  0.00000E+00  -0.13493E+03  -0.33737E+03   0.72112E+03   0.16493E-01  -0.21966E+01   0.26692E+01   0.20301E+02
   Z FUSE       Z H.TAIL      Z V.TAIL      Z F.ROT       Z R.ROT         Z/M         AICR BOD      BICR BOD      THOR BOD
0.13437E+03  -0.23588E+03   0.00000E+00  -0.16442E+05  -0.26928E+03  -0.32147E+02   0.00000E+00   0.00000E+00   0.20069E+02
   L FUSE       L H.TAIL      L V.TAIL      L F.ROT       L R.ROT        L/IXX        LHBF BOD      LHBR BOD        PFR
0.42261E+03   0.00000E+00  -0.31274E+03  -0.40367E+04   0.39247E+04  -0.38744E-03  -0.10418E+04  -0.23124E+03   0.00000E+00
   M FUSE       M H.TAIL      M V.TAIL      M F.ROT       M R.ROT        M/IYY        MHBF BOD      MHBR BOD        QFR
-0.33532E+04 -0.66512E+04  -0.33420E+01   0.18503E+05  -0.34867E+04   0.10255E-03  -0.16632E+04   0.27381E+03   0.00000E+00
   N FUSE       N H.TAIL      N V.TAIL      N F.ROT       N R.ROT        N/IZZ        A1FR BOD      A1RR BOD        PRR
-0.19621E+04  0.00000E+00   0.39213E+04   0.20032E+05  -0.21934E+05   0.19865E-03  -0.62580E+00   0.99620E+00   0.00000E+00
   BETA FS      BETA HT       BETA VT       BETA FR       BETA RR         WIHT        B1FR BOD      B1RR BOD        QRR
0.71779E+01   0.71779E+01  -0.71779E+01   0.71735E+01  -0.69923E+01  -0.30672E+02  -0.39198E+00  -0.71460E+00   0.00000E+00
   ALPH FS      ALPH HT       ALPH VT        ATWFR         ATWRR          VIVT        HFR BODY      HRR BODY        LFW
-0.61133E+01  0.69041E+01   0.21814E+01   0.00000E+00   0.00000E+00   0.00000E+00  -0.22093E+03   0.11170E+02   0.16473E+05
    VINTE         CLHT          CLVT         BTWFR         BTWRR          WIRR        YFR BODY      YRR BODY       DELONUD
0.16442E+02   0.36055E+00  -0.34290E+00   0.00000E+00   0.00000E+00  -0.26934E+02  -0.33737E+03  -0.67663E+01   0.76475E+02
    WIFS          CDHT          CDVT         TTWFR         TTWRR        AIC MEF       BIC MEF        AICRR         BICRR
-0.14714E+02  0.33014E-01   0.33924E-01  -0.19700E+02  -0.17997E+02   0.00000E+00   0.00000E+00  -0.60474E+00   0.61090E+00
```

ORIGINAL PAGE IS
OF POOR QUALITY

```
UTTAS         STABILITY AND CONTROL DERIVATIVES

      G.W. = 16524.91  LBS     VEL. =    60.00  KTS     ALT. =   600.00  FT
      C.G. =    -9.20  IN      R/C =      0.00  FPM     TEMP =    59.00  DEG

               L/IXX      M/IYY      N/IZZ       X/M        Y/M        Z/M

DELS         -0.1756    -0.4117     0.0295     1.2083    -0.1062     3.3652
DELB          1.4351     0.0101    -0.0183    -0.0132     1.0025     0.3496
DELR         -0.3472    -0.0638     0.6423     0.7210    -1.5141     2.6133
DELC          0.3406     0.1221     0.0014     0.5895     0.3672    -7.6382
P            -3.9504     0.2273    -0.0123    -1.3306    -2.4773    -0.7327
Q            -1.4220    -1.2511    -0.2051     1.4235    -1.1233     0.5734
R             0.4537    -0.1236    -0.6089    -0.4004     1.2031     2.4117
U            -0.0021     0.0033    -0.0025    -0.0215    -0.0054    -0.0333
V            -0.0263     0.0013     0.0140    -0.0057    -0.0935    -0.0410
W             0.0279     0.0072    -0.0072     0.0325     0.0169    -0.6197
IHT          -0.0955    -1.4504     0.0396    -1.6934    -0.2086     1.5102
```

```
                    U T T A S        S T A B I L I T Y   A N D   C O N T R O L   D E R I V A T I V E S

                    A0FR     A180FR    S180FR     LHR BDF     MHR BDF    HFR BOD      YFR BOD     THRUST F     THRUST T    LIFT HT

DELB             -0.3509   -3.0967   -0.2297     -610.58    -8229.92    -741.79       -54.29     -1819.60        -1.72      -69.31
DELS             -0.0965   -0.0379    1.8772     4938.98     -100.72      -2.76       534.97      -416.58       -11.43       30.37
DELR             -0.2301   -1.8723   -0.1237     -328.64    -4975.93    -456.18       -26.71     -1179.10      -318.57     -104.32
DELC              0.9254    0.1844    0.4241     1127.10      493.10     -84.30        11.98      4086.15       194.34       89.21
P                 0.0257    1.9528   -5.3195   -14152.33     5137.55     595.43     -1138.03       330.64      -155.04      -87.40
Q                -0.2329   -5.5001   -1.8224    -4343.40   -14617.46   -1050.97      -716.66     -1226.29       131.26     -930.56
R                -0.0820    0.1974   -0.3474     -934.75      637.34      92.79       -40.80     -1434.34       494.05       22.75
U                 0.0015    0.0166   -0.0060      -16.03       44.14       6.65        -2.10        20.60         3.52        3.04
V                 0.0019    0.0197   -0.0233      -62.05       52.43       3.30        -6.10        14.04       -15.51       -3.64
W                 0.0574    0.0238    0.0365       97.07       63.15      -3.21         8.27       391.99         0.52      -10.60
IHT              -0.6337   -0.0349   -0.0601     -165.05      -92.74      81.09        64.98     -2806.26      -125.39    -2032.36
INPUT: UZERO 60.
   F 3:
   F 3:
   F 6:
INPUT: EXEC
```

ORIGINAL PAGE IS
OF POOR QUALITY

```
                                                         UH-60A      T R I M   D A T A
   TIME-DATE      8: 5     3/16/84                                FLIGHT NO.= BASE   RUN NO.= TRIM   TAPE SEQ. NO.=     0        PAGE     1
  VTOT=    30.3 KT   U=    30.0 KT    V=     5.3 KT    W=     3.3 KT
  G.W.=  16324.9 LBS   RPM=  263.0    H=    600.0 FT   TEMP=  59.0 DG   XCG=   -9.2 IN   ZCG=   0.0 IN RHP=  1132.7
   THETA           PHI            PSI             P               Q               R              ROE          OMEGA FR        OMEGA RR
0.23791E+01   0.00000E+00   -0.41306E+01    0.00000E+00    0.00000E+00    0.00000E+00    0.23258E-02    0.27540E+02    0.12712E+03
   DELB PLT       DELS PLT       DELR PLT       DELC PLT       DELB TOT       DELS TOT       DELR TOT       DELC TOT        H DOT
0.10010E+01   -0.45296E+00   -0.22425E+00    0.40335E+01    0.00000E+00    0.00000E+00    0.00000E+00    0.00000E+00    0.00000E+00
   THETO FR       AICFR          BICFR          THETC TR        IXX            IYY            IZZ            IXZ           D.PRES F
0.20350E+02   -0.24559E+01    0.42172E+01    0.13759E+02    0.55290E+04    0.40000E+05    0.37200E+05    0.16700E+04    0.21378E+02
   SIGMA FR       SIGMA RR       GAMMA FS       INCID HT       LAMDA FR       LAMDA RR       MU FR          MU RR          MACH NO.
0.32083E-01    0.19751E+00    0.14673E+01    0.79737E+01   -0.19057E-01   -0.47647E-01    0.18347E+00    0.19422E+00    0.12149E+00
   THRUST F       NORMAL F       SIDE F         TORQUE F       L HUB FR       M HUB FR       V TIP FR       DELTA FR       F FR
0.16614E+05   -0.46293E+03   -0.37512E+03    0.21267E+05   -0.13593E+04   -0.50617E+04    0.73904E+03    0.10012E-01    0.28738E+07
   THRUST R       NORMAL R       SIDE R         TORQUE R       L HUB RR       M HUB RR       V TIP RR       DELTA RR       F RR
0.32320E+03    0.13153E+02   -0.11630E+02    0.29335E+03   -0.33092E+03    0.27459E+03    0.69919E+03    0.32536E-02    0.10805E+06
   CT FR          CH FR          CY FR          CQ FR          A0 FR          A1 FR          B1 FR          Q GOV FR       CMO FR
0.57812E-02   -0.16111E-03   -0.13506E-03    0.27577E-03    0.26412E+01   -0.19046E+01   -0.51164E+00    0.21267E+05   -0.92662E-02
   CT RR          CH RR          CY RR          CQ RR          A0 RR          A1 RR          B1 RR          Q GOV RR       CMO RR
0.76136E-02    0.12173E-03   -0.10763E-03    0.49362E-03    0.53234E+00    0.10262E+01   -0.10242E+01    0.29334E+03   -0.57525E-02
   X FUSE         X H.TAIL       X V.TAIL       X F.ROT        X R.ROT        X/M            D FRFS         D FRHT         D FRRR
-0.62431E+03   -0.15263E+02   -0.63099E+01    0.13588E+04   -0.14243E+02    0.13349E+01    0.87022E+00    0.18243E+01    0.18679E+01
   Y FUSE         Y H.TAIL       Y V.TAIL       Y F.ROT        Y R.ROT        Y/M            AICF BOD       BICF BOD       THOF BOD
-0.24243E+03    0.00000E+00   -0.17096E+03   -0.35537E+03    0.76991E+03    0.59292E-02   -0.21422E+01    0.43849E+01    0.20350E+02
   Z FUSE         Z H.TAIL       Z V.TAIL       Z F.ROT        Z R.ROT        Z/M            AICR BOD       BICR BOD       THOR BOD
0.75904E+02   -0.29361E+02    0.00000E+00   -0.16565E+05   -0.29153E+03   -0.32142E+02    0.00000E+00    0.00000E+00    0.19132E+02
   L FUSE         L H.TAIL       L V.TAIL       L F.ROT        L R.ROT        L/IXX          LHBF BOD       LHBR BOD       PFR
0.36749E+03    0.00000E+00   -0.39611E+03   -0.41027E+04    0.41305E+04   -0.14412E-03   -0.98746E+03   -0.30190E+03    0.00000E+00
   M FUSE         M H.TAIL       M V.TAIL       M F.ROT        M R.ROT        M/IYY          MHBF BOD       MHBR BOD       QFR
-0.37350E+04   -0.32524E+03    0.14613E+02    0.13652E+05   -0.91054E+04    0.35515E-04   -0.51473E+04    0.30610E+03    0.00000E+00
   N FUSE         N H.TAIL       N V.TAIL       N F.ROT        N R.ROT        N/IZZ          A1FR BOD       A1RR BOD       PRR
-0.20336E+04    0.00000E+00    0.43399E+04    0.20621E+05   -0.23474E+05    0.75710E-04   -0.19368E+01    0.11228E+01    0.00000E+00
   BETA FS        BETA HT        BETA VT        BETA FR        BETA RR        WIHT           B1FR BOD       B1RR BOD       QRR
0.41306E+01    0.41806E+01   -0.41306E+01    0.41773E+01   -0.57011E+01   -0.23021E+02   -0.37155E+00   -0.91719E+00    0.00000E+00
   ALPH FS        ALPH HT        ALPH VT        ATWFR          ATWRR          VIVT           HFR BODY       HRR BODY       LFW
-0.22748E+01    0.53273E+00    0.33791E+01    0.00000E+00    0.00000E+00    0.00000E+00   -0.49003E+03    0.14243E+02    0.16608E+05
   VINTF          CLHT           CLVT           BTWFR          BTWRR          WIRP           YFR BODY       YRR BODY       DELQNUD
0.12619E+02    0.37042E-01   -0.24464E+00    0.00000E+00    0.00000E+00   -0.23571E+02   -0.35337E+03   -0.10266E+02    0.33978E+03
   WIFS           CDHT           CDVT           TTWFR          TTWRR          AIC MEF        BIC MEF        AICRR          BICRR
-0.10931E+00    0.12109E-01    0.29[illegible]4E-01   -0.19700E+02   -0.17997E+02    0.00000E+00    0.00000E+00   -0.71852E+00    0.71715E+00
```

```
UTTAS          STABILITY AND CONTROL DERIVATIVES

     G.W. = 16824.91  LBS     VEL. =    80.00  KTS     ALT. =   600.00  FT
     C.G. =    -9.20  IN      R/C =      0.00  FPM     TEMP =    59.00  DEG


             L/IXX      M/IYY      N/IZZ       X/M        Y/M        Z/M

DELB       -0.2096    -0.4301     0.0341     0.9610    -0.0859     4.6934
DELS        1.4266     0.0265    -0.0030    -0.0351     1.0085     0.9130
DELR       -0.9403    -0.0761     0.7126     0.5859    -1.6609     3.4155
DELC        0.3464     0.0961    -0.0139     0.6738     0.3730    -8.4012
P          -0.5577     0.2072    -0.0297    -1.2188    -2.5834    -1.2370
Q          -1.3659    -1.4450    -0.3152     1.4500    -1.0565    -0.0124
R           0.5331    -0.1105    -0.7151    -0.4547     1.4493     2.5002
U          -0.0017     0.0079    -0.0017    -0.0313    -0.0040     0.0154
V          -0.0287     0.0005     0.0159    -0.0024    -0.1119    -0.0309
W           0.0257     0.0081    -0.0039     0.0453     0.0122    -0.6827
IHT        -0.1679    -1.9783     0.0439    -1.5587    -0.2441    -0.0464
```

ORIGINAL PAGE IS
OF POOR QUALITY

```
                  U T T A S       S T A B I L I T Y   A N D   C O N T R O L   D E R I V A T I V E S

                   A0FR    A16DFR    B1SDFR     LHB BDF     MHB BDF   HFR BOD     YFR BOD    THRUST F    THRUST T     LIFT HT

DELB             -0.4856   -3.1694   -0.3140     -334.51    -8423.34    -650.61      -50.42    -2535.27        6.14      -74.83
DELS             -0.0881   -0.0376    1.3646     4955.59      -99.95       6.16      537.48     -427.84      -10.68       52.40
DELR             -0.3098   -1.9076   -0.1781     -473.39    -5069.77    -402.98      -25.61    -1604.05     -903.52     -140.90
DELC              0.9375    0.3516    0.4278     1137.09      934.38    -117.64       -0.96     4424.91      210.53       36.23
P                 0.0303    1.9343   -5.2550   -13980.42     5125.20     658.50    -1162.53      593.40     -180.49     -124.26
Q                -0.2205   -3.5431   -1.3393    -4888.23   -14731.39    -998.74     -714.72    -1205.18      169.11    -1196.73
R                -0.0920    0.2146   -0.3543     -356.59      933.95     123.94      -44.72    -1474.43      567.24       55.86
U                -0.0032    0.0163   -0.0054      -14.22       44.69       7.14       -1.59       -0.66        3.43       10.36
V                 0.0012    0.0139   -0.0207      -55.07       37.00       1.69       -6.39        9.71      -17.80       -9.43
W                 0.0623    0.0263    0.0360       96.22       76.59      -8.92        5.10      330.24        1.52      -11.50
IHT              -0.5138    0.0014   -0.1624     -431.70        3.69     136.73       40.50    -2745.50     -179.65    -2787.68
INPUT: UZERO 100.
     F 3:
     F 3:
     F 6:
INPUT: EXEC
```

ORIGINAL PAGE IS
OF POOR QUALITY

```
                                                UH-60A     T R I M   D A T A
  TIME-DATE      3: 9    3/16/84                          FLIGHT NO.= BASE   RUN NO.= TRIM   TAPE SEQ. NO.=    0          PAGE    1
 VTOT=  100.2 KT   U=  100.0 KT   V=    5.5 KT   W=    2.8 KT
 G.W.=  16324.9 LBS   RPM=  263.0   H=   600.0 FT   TEMP=  59.0 DG   XCG=   -9.2 IN   ZCG=   0.0 IN RHP=  1305.1
   THETA          PHI           PSI            P              Q              R             ROE          OMEGA FR       OMEGA RR
 0.16046E+01   0.00000E+00  -0.31506E+01   0.00000E+00    0.00000E+00   0.00000E+00   0.23253E-02   0.27540E+02   0.12712E+03
   DELB PLT      DELS PLT      DELR PLT      DELC PLT       DELB TOT      DELS TOT      DELR TOT      DELC TOT       H DOT
 0.14306E+01  -0.39546E+00  -0.14945E+00   0.43792E+01    0.00000E+00   0.00000E+00   0.00000E+00   0.00000E+00   0.00000E+00
   THETO FR      AICFR         BICFR         THETO TR       IXX           IYY           IZZ           IXZ           D.PRES F
 0.20904E+02  -0.25105E+01   0.57295E+01   0.18317E+02    0.56290E+04   0.40000E+05   0.37200E+05   0.16700E+04   0.33294E+02
   SIGMA FR      SIGMA RR      GAMMA FS      INCID HT       LAMDA FR      LAMDA RR      MU FR         MU RR         MACH NO.
 0.52033E-01   0.18751E+00   0.14363E+01   0.19774E+01   -0.19394E-01  -0.44857E-01   0.22891E+00   0.24208E+00   0.15162E+00
   THRUST F      NORMAL F      SIDE F        TORQUE F       L HUB FR      M HUB FR      V TIP FR      DELTA FR      F FR
 0.16757E+05  -0.59408E+03  -0.43787E+03   0.24675E+05   -0.16153E+04  -0.73049E+04   0.73904E+03   0.10025E-01   0.28738E+07
   THRUST R      NORMAL R      SIDE R        TORQUE R       L HUB RR      M HUB RR      V TIP RR      DELTA RR      F RR
 0.99937E+03   0.19260E+02  -0.19351E+02   0.30102E+03   -0.42377E+03   0.36002E+03   0.69919E+03   0.37663E-02   0.10825E+06
   CT FR         CH FR         CY FR         CQ FR          A0 FR         A1 FR         B1 FR         Q GOV FR      CMQ FR
 0.33310E-02  -0.20672E-03  -0.15237E-03   0.31997E-03    0.26196E+01  -0.27486E+01  -0.60779E+00   0.24675E+05  -0.93573E-02
   CT RR         CH RR         CY RR         CQ RR          A0 RR         A1 RR         B1 RR         Q GOV RR      CMQ RR
 0.91565E-02   0.17525E-03  -0.18331E-03   0.50653E-03    0.63935E+00   0.13441E+01  -0.13105E+01   0.30101E+03  -0.65314E-02
   X FUSE        X H.TAIL      X V.TAIL      X F.ROT        X R.ROT       X/M           D FRFS        D FRHT        D FRRR
-0.97613E+03  -0.91600E+01  -0.14644E+02   0.14933E+04   -0.20510E+02   0.90035E+00   0.86559E+00   0.19292E+01   0.19400E+01
   Y FUSE        Y H.TAIL      Y V.TAIL      Y F.ROT        Y R.ROT       Y/M           AICF BOD      BICF BOD      THOF BOD
-0.28498E+03   0.00000E+00  -0.23069E+03  -0.40456E+03    0.92320E+03   0.58773E-02  -0.21918E+01   0.58589E+01   0.20904E+02
   Z FUSE        Z H.TAIL      Z V.TAIL      Z F.ROT        Z R.ROT       Z/M           AICR BOD      BICR BOD      THOR BOD
 0.38127E+02   0.13155E+03   0.00000E+00  -0.16702E+05   -0.35623E+03  -0.32157E+02   0.00000E+00   0.00000E+00   0.19264E+02
   L FUSE        L H.TAIL      L V.TAIL      L F.ROT        L R.ROT       L/IXX         LHBF BOD      LHBR BOD      PFR
 0.42109E+03   0.00000E+00  -0.53450E+03  -0.47949E+04    0.49075E+04  -0.13827E-03  -0.12114E+04  -0.39948E+03   0.00000E+00
   M FUSE        M H.TAIL      M V.TAIL      M F.ROT        M R.ROT       M/IYY         MHBF BOD      MHBR BOD      QFR
-0.50211E+04   0.51633E+04   0.37930E+02   0.10872E+05   -0.11049E+05  -0.41046E-05  -0.73826E+04   0.38630E+03   0.00000E+00
   N FUSE        N H.TAIL      N V.TAIL      N F.ROT        N R.ROT       N/IZZ         A1FR BOD      A1RR BOD      PRR
-0.27759E+04   0.00000E+00   0.65308E+04   0.23931E+05   -0.28033E+05   0.78965E-04  -0.27773E+01   0.14264E+01   0.00000E+00
   BETA FS       BETA HT       BETA VT       BETA FR        BETA RR       WIHT          B1FR BOD      B1RR BOD      QRR
 0.31506E+01   0.31506E+01  -0.31506E+01   0.31503E+01   -0.37255E+01  -0.18682E+02  -0.45592E+00  -0.12207E+01   0.00000E+00
   ALPH FS       ALPH HT       ALPH VT       ATWFR          ATWRR         VIVT          HFR BODY      HRR BODY      LFW
-0.13950E+01  -0.27444E+01   0.16046E+01   0.00000E+00    0.00000E+00   0.00000E+00  -0.61725E+03   0.20510E+02   0.16738E+05
   VINTF         CLHT          CLVT          BTWFR          BTWRR         WIRR          YFR BODY      YRR BODY      DELQNUD
 0.10219E+02  -0.14332E+00  -0.21057E+00   0.00000E+00    0.00000E+00  -0.19826E+02  -0.40455E+03  -0.13567E+02   0.79543E+03
   WIFS          CDHT          CDVT          TTWFR          TTWRR         AIC MEF       BIC MEF       AICRR         BICRR
-0.33456E+01   0.19148E-01   0.23401E-01  -0.19700E+02   -0.17997E+02   0.00000E+00   0.00000E+00  -0.94115E+00   0.91781E+00
```

```
U T T A S        S T A B I L I T Y   A N D   C O N T R O L   D E R I V A T I V E S

      G.W. = 16324.91  LBS     VEL. =    100.00  KTS     ALT. =   600.00  FT
      C.G. =     -9.20  IN     R/C =       0.00  FPM     TEMP =    59.00  DEG

             L/IXX      M/IYY      N/IZZ       X/M        Y/M        Z/M

DELB       -0.0276    -0.4485     0.0372     0.6903    -0.0563     6.0814
DELS        1.4719     0.0442     0.0010    -0.0736     1.0190     1.0413
DELR       -1.0161    -0.0916     0.7767     0.4760    -1.7930     4.2553
DELC        0.5464     0.1217    -0.0247     0.7219     0.3701    -8.9206
P          -3.7991     0.1609    -0.0434    -1.1004    -2.5601    -1.8369
Q          -1.3947    -1.6295    -0.3793     1.3370    -1.0209    -0.5135
R           0.5249    -0.0842    -0.8105    -0.5494     1.6766     2.6887
U          -0.0006     0.0007    -0.0011    -0.0410    -0.0030     0.0198
V          -0.0309    -0.0015     0.0176     0.0022    -0.1320    -0.0327
W           0.0244     0.0084    -0.0033     0.0565     0.0084    -0.7308
IHT        -0.2038    -2.6621     0.0722    -0.3198    -0.3362    -1.8337
```

ORIGINAL PAGE IS
OF POOR QUALITY

```
                U T T A S        S T A B I L I T Y   A N D   C O N T R O L   D E R I V A T I V E S

                 ACFR     A1SDFR    B1SDFR      LHB BDF     MHB BDF   HFR BOD      YFR BOD     THRUST F     THRUST T     LIFT HT

DELB           -0.6278   -3.2579   -0.3330     -1017.77    -3653.38    -541.04      -35.61    -3286.66         6.77       -84.00
DELS           -0.0966   -0.0310    1.3672      4962.36      -82.30      14.70      546.34     -471.76       -14.86        74.82
DELR           -0.3970   -1.9612   -0.2182      -579.79    -5212.37    -341.48      -15.83    -2064.05      -991.54      -193.12
DELC            1.0332    0.5460    0.4452      1183.32     1451.16    -128.68      -17.77     4708.18       227.93        53.67
P               0.1327    1.9565   -5.1804    -13782.37     5202.32     637.38    -1111.17      372.01      -215.26      -173.49
Q              -0.2193   -5.5703   -1.3316     -4367.63   -14804.18    -343.23     -710.87    -1238.29       184.56     -1475.43
R              -0.1130    0.2594   -0.3505      -830.40     1212.91     155.42      -35.05    -1550.94       613.91        98.98
U              -0.0062    0.0170   -0.0040       -10.66       45.08       3.11       -0.72      -12.59         3.22         0.85
V               0.0011    0.0114   -0.0204       -54.10       30.36       0.95       -7.05        9.10       -19.31       -12.56
W               0.0663    0.0364    0.0355       102.37       96.66     -12.97        2.41      349.03         2.30       -13.53
IHT            -0.5503    0.1314   -0.1724      -458.19      482.20     216.20       50.41    -2300.11      -242.92     -3798.89
INPUT: DZERO 120.
   = 1:
   = 3:
   = 6:
INPUT: EXEC
```

ORIGINAL PAGE IS
OF POOR QUALITY

```
                                          UH-60A     T R I M  D A T A
  TIME-DATE      8:12    3/16/84                         FLIGHT NO.= BASE   RUN NO.= TRIM   TAPE SEQ. NO.=    0        PAGE    1
 VTOT=  120.3 KT   U=  120.0 KT   V=    5.8 KT   W=   -1.3 KT
 G.W.=  16824.9 LBS   RPM=  258.0   H=   600.0 FT   TEMP=  59.0 DG   XCG=   -9.2 IN   ZCG=   0.0 IN RHP=  1573.9
    THETA         PHI           PSI            P              Q              R              ROE           OMEGA FR       OMEGA RR
-0.63023E+00  0.00000E+00  -0.27340E+01  0.00000E+00   0.00000E+00   0.00000E+00   0.23258E-02   0.27540E+02   0.12712E+03
   DELB PLT      DELS PLT      DELR PLT      DELC PLT       DELB TOT       DELS TOT       DELR TOT       DELC TOT        H DOT
 0.15116E+01 -0.41265E+00  -0.12345E+00   0.50092E+01   0.00000E+00   0.00000E+00   0.00000E+00   0.00000E+00   0.00000E+00
   THETO FR      AICFR         BICFR         THETO TR       IXX            IYY            IZZ            IXZ           D.PRES F
 0.21913E+02 -0.25969E+01   0.52651E+01   0.19550E+02   0.56290E+04   0.40000E+05   0.37200E+05   0.16700E+04   0.47995E+02
   SIGMA FR      SIGMA RR      GAMMA FS      INCID HT       LAMDA FR       LAMDA RR       MU FR          MU RR         MACH NO.
 0.82083E-01  0.18751E+00   0.14652E+01   0.93927E+00  -0.29044E-01 , -0.48348E-01   0.27404E+00   0.29059E+00   0.18204E+00
   THRUST F      NORMAL F      SIDE F        TORQUE F       L HUB FR       M HUB FR       V TIP FR       DELTA FR       F FR
 0.16977E+05 -0.36405E+03  -0.43464E+03   0.29562E+05  -0.19720E+04  -0.62336E+04   0.73904E+03   0.10046E-01   0.28738E+07
   THRUST R      NORMAL R      SIDE R        TORQUE R       L HUB RR       M HUB RR       V TIP RR       DELTA RR       F RR
 0.12504E-04  0.29326E+02  -0.35057E+02   0.33965E+03  -0.55977E+03   0.49603E+03   0.69919E+03   0.55066E-02   0.10805E+06
   CT FR         CH FR         CY FR         CQ FR          A0 FR          A1 FR          B1 FR         Q GOV FR       CMO FR
 0.59077E-02 -0.12658E-03  -0.16364E-03   0.38723E-03   0.26190E+01  -0.23662E+01  -0.74201E+00   0.29862E+05  -0.94992E-02
   CT RR         CH RR         CY RR         CQ RR          A0 RR          A1 RR          B1 RR         Q GOV RR       CMO RR
 0.11388E-01  0.27141E-03  -0.32445E-03   0.57153E-03   0.32295E+00   0.18501E+01  -0.17623E+01   0.33964E+03  -0.79154E-02
   X FUSE        X H.TAIL      X V.TAIL      X F.ROT        X R.ROT        X/M            D FRFS         D FRHT         D FRRR
-0.13994E+04 -0.63665E+01  -0.23186E+02   0.12751E+04  -0.31700E+02  -0.35477E+00   0.87719E+00   0.19665E+01   0.19060E+01
   Y FUSE        Y H.TAIL      Y V.TAIL      Y F.ROT        Y R.ROT        Y/M            AICF BOD       BICF BOD       THOF BOD
-0.36176E+03  0.00000E+00  -0.31360E+03  -0.46635E+03   0.11448E+04   0.58838E-02  -0.22890E+01   0.63840E+01   0.21913E+02
   Z FUSE        Z H.TAIL      Z V.TAIL      Z F.ROT        Z R.ROT        Z/M            AICR BOD       BICR BOD       THOR BOD
 0.22651E+03  0.33588E+03   0.00000E+00  -0.16934E+05  -0.45227E+03  -0.32168E+02   0.00000E+00   0.00000E+00   0.20126E+02
   L FUSE        L H.TAIL      L V.TAIL      L F.ROT        L R.ROT        L/IXX          LHBF BOD       LHBR BOD       PFR
 0.54949E+03  0.00000E+00  -0.72661E+03  -0.58693E+04   0.60447E+04  -0.12764E-03  -0.16637E+04  -0.52379E+03   0.00000E+00
   M FUSE        M H.TAIL      M V.TAIL      M F.ROT        M R.ROT        M/IYY          MHBF BOD       MHBR BOD       QFR
-0.91494E+04  0.95461E+04   0.53723E+02   0.13436E+05  -0.13938E+05  -0.23233E-04  -0.63771E+04   0.53383E+03   0.00000E+00
   N FUSE        N H.TAIL      N V.TAIL      N F.ROT        N R.ROT        N/IZZ          A1FR BOD       A1RR BOD       PRR
-0.30367E+04  0.00000E+00   0.39790E+04   0.29998E+05  -0.34776E+05   0.70985E-04  -0.23995E+01   0.19685E+01   0.00000E+00
   BETA FS       BETA HT       BETA VT       BETA FR        BETA RR        WIHT           B1FR BOD       B1RR BOD       QRR
 0.27340E+01  0.27340E+01  -0.27340E+01   0.27594E+01  -0.40010E+01  -0.16110E+02  -0.62596E+00  -0.16289E+01   0.00000E+00
   ALPH FS       ALPH HT       ALPH VT       ATWFR          ATWRR          VIVT           HFR BODY       HRR BODY       LFW
-0.27584E+01 -0.41812E+01  -0.63023E+00   0.00000E+00   0.00000E+00   0.00000E+00  -0.38720E+03   0.31700E+02   0.16919E+05
   VINTF         CLHT          CLVT          BTWFR          BTWRR          WIRR           YFR BODY       YRR BODY       DELQNUD
 0.36311E+01 -0.21835E+00  -0.20179E+00   0.00000E+00   0.00000E+00  -0.16451E+02  -0.46635E+03  -0.32926E+02   0.13245E+04
   WIFS          CDHT          CDVT          TTWFR          TTWRR          AIC MEF        BIC MEF        AICRR          BICRR
-0.75711E+01  0.23937E-01   0.24322E-01  -0.19700E+02  -0.17997E+02   0.00000E+00   0.00000E+00  -0.12954E+01   0.12340E+01
```

```
UTTAS        STABILITY AND CONTROL DERIVATIVES

      G.W. = 16824.91  LBS     VEL. =   120.00  KTS     ALT. =   600.00  FT
      C.G. =     -9.20  IN     R/C =      0.00  FPM     TEMP =    59.00  DEG


                L/IXX      M/IYY      N/IZZ       X/M        Y/M        Z/M

DELB          -0.2362    -0.4734     0.0135     0.4840    -0.0169     7.5805
DELS           1.4350     0.0542     0.0015    -0.0711     1.0381     1.2676
DELR          -1.0759    -0.1081     0.8174     0.3879    -1.8945     5.1970
DELC           0.3666     0.1243    -0.0172     0.6054     0.3875    -9.4494
P             -3.5491     0.1706    -0.0663    -1.0612    -2.4034    -2.2662
Q             -1.3942    -1.7512    -0.3677     0.9722    -0.9672    -0.5326
R              0.7174    -0.0752    -0.9146    -0.5742     1.9175     3.1334
U              0.0007     0.0010    -0.0013    -0.0460    -0.0022     0.0272
V             -0.0324    -0.0040     0.0185     0.0032    -0.1516    -0.0342
W              0.0227     0.0095    -0.0067     0.0528     0.0047    -0.7672
IHT           -0.1951    -3.2630     0.0312    -0.9091    -0.2889    -2.0607
```

```
               U T T A S        S T A B I L I T Y   A N D   C O N T R O L   D E R I V A T I V E S

                  AOFR     A1BDFR     B1BDFR     LHB BDF     MHB BDF   HFR BOD     YFR BOD    THRUST F    THRUST T    LIFT HT

DELB           -0.7799    -3.4033    -0.4656    -1237.35    -9044.94    -478.54     -16.92    -4088.69        9.15     -85.56
DELS           -0.1160    -0.0535     1.8525     4923.46     -142.28       9.25     556.51     -570.14      -14.63      95.87
DELR           -0.4926    -2.0538    -0.2685     -713.64    -5453.30    -311.43      -3.56    -2566.75    -1067.40    -236.33
DELC            1.0687     0.7371     0.4940     1313.01     1959.00     -58.92     -29.19     4948.23      251.79      29.99
P               0.1655     1.9500    -5.1023   -13575.34     5162.11     631.38   -1005.82     1055.41     -233.82    -196.94
Q              -0.2518    -5.6808    -1.3228    -4844.36   -15097.79    -631.62    -700.03    -1439.92      202.91   -1663.30
R              -0.1627     0.2360    -0.3602     -523.13     1079.06     146.97     -18.69    -1759.43      661.39     146.96
U              -0.0075     0.0166    -0.0030       -7.37       44.06       8.28       0.04      -14.33        3.35       2.25
V               0.0009     0.0091    -0.0213      -56.56       24.28       0.50      -7.93        7.75      -21.14     -16.18
W               0.0685     0.0433     0.0409      103.63      115.17     -11.42      -0.36      360.86        3.16     -15.25
IHT            -0.7701    -0.0194    -0.2085     -554.03      -51.49     173.26      72.21    -3482.85     -240.98   -4594.86
INPUT: UZERO 140.
  F 3:
  F 3:
  F 6:
INPUT: EXEC
```

```
                                                     UH-60A     T R I M   D A T A
                                                                FLIGHT NO.= BASE   RUN NO.= TRIM   TAPE SEQ. NO.=    0          PAGE     1
   TIME-DATE      8:15     3/16/94
  VTOT=  140.7 KT    U=  140.0 KT    V=     6.5 KT    W=    -5.6 KT
  G.W.=  16824.9 LBS   RPM=  263.0    H=    600.0 FT   TEMP=  59.0 DG   XCG=    -9.2 IN    ZCG=    0.0 IN RHP=  1934.3
     THETA            PHI              PSI              P                Q                R               ROE             OMEGA FR         OMEGA RR
 -0.35256E+01    0.00000E+00    -0.26796E+01     0.00000E+00     0.00000E+00     0.00000E+00     0.23258E-02     0.27540E+02     0.12712E+03
    DELB PLT        DELS PLT        DELR PLT        DELC PLT        DELB TOT        DELS TOT        DELR TOT        DELC TOT          H DOT
  0.15525E+01   -0.49045E+00    -0.94921E-01     0.59956E+01     0.00000E+00     0.00000E+00     0.00000E+00     0.00000E+00     0.00000E+00
    THETO FR         AICFR           BICFR          THETO TR          IXX              IYY              IZZ              IXZ           D.PRES F
  0.23494E+02   -0.28149E+01     0.57382E+01     0.20795E+02     0.56290E+04     0.40000E+05     0.37200E+05     0.16700E+04     0.65695E+02
    SIGMA FR        SIGMA RR        GAMMA FS        INCID HT        LAMDA FR        LAMDA RR          MU FR           MU RR         MACH NO.
  0.62083E-01    0.13751E+00     0.14253E+01     0.56240E+00    -0.46706E-01    -0.56656E-01     0.31884E+00     0.33978E+00     0.21298E+00
    THRUST F        NORMAL F         SIDE F         TORQUE F        L HUB FR        M HUB FR        V TIP FR        DELTA FR          F FR
  0.17467E+05    0.20041E+02    -0.57569E+03     0.36762E+05    -0.25387E+04    -0.43456E+04     0.73904E+03     0.10092E-01     0.28738E+07
    THRUST R        NORMAL R         SIDE R         TORQUE R        L HUB RR        M HUB RR        V TIP RR        DELTA RR          F RR
  0.15449E+04    0.45792E+02    -0.61834E+02     0.40442E+03    -0.74498E+03     0.69172E+03     0.69919E+03     0.88933E-02     0.10805E+06
     CT FR           CH FR           CY FR           CQ FR           A0 FR           A1 FR           B1 FR          Q GOV FR         CMO FR
  0.52732E-02    0.39733E-05    -0.12641E-03     0.47670E-03     0.26751E+01    -0.16351E+01    -0.95523E+00     0.36762E+05    -0.98211E-02
     CT RR           CH RR           CY RR           CQ RR           A0 RR           A1 RR           B1 RR          Q GOV RR         CMO RR
  0.14293E-01    0.42330E-03    -0.37246E-03     0.63053E-03     0.13703E+01     0.25776E+01    -0.24047E+01     0.40442E+03    -0.10173E-01
     X FUSE         X H.TAIL        X V.TAIL        X F.ROT         X R.ROT           X/M            D FRFS          D FRHT          D FRRR
 -0.18834E+04    0.17691E+02    -0.32334E+02     0.91923E+03    -0.51545E+02    -0.19797E+01     0.89747E+00     0.19412E+01     0.19242E+01
     Y FUSE         Y H.TAIL        Y V.TAIL        Y F.ROT         Y R.ROT           Y/M           AICF BOD        BICF BOD        THOF BOD
 -0.47329E+03    0.00000E+00    -0.41957E+03    -0.53604E+03     0.14320E+04     0.58659E-02    -0.24945E+01     0.68829E+01     0.23494E+02
     Z FUSE         Z H.TAIL        Z V.TAIL        Z F.ROT         Z R.ROT           Z/M           AICR BOD        BICR BOD        THOR BOD
  0.54960E+03    0.53327E+03     0.00000E+00    -0.17443E+05    -0.53273E+03    -0.32109E+02     0.00000E+00     0.00000E+00     0.21545E+02
     L FUSE         L H.TAIL        L V.TAIL        L F.ROT         L R.ROT          L/IXX           LHBF BOD        LHBR BOD          PFR
  0.74161E+03    0.00000E+00    -0.97215E+03    -0.72919E+04     0.75217E+04    -0.13346E-03    -0.23319E+04    -0.67479E+03     0.00000E+00
     M FUSE         M H.TAIL        M V.TAIL        M F.ROT         M R.ROT          M/IYY           MHBF BOD        MHBR BOD          QFR
 -0.17043E+05    0.16560E+05     0.74913E+02     0.12236E+05    -0.17836E+05    -0.18028E-03    -0.44600E+04     0.76035E+03     0.00000E+00
     N FUSE         N H.TAIL        N V.TAIL        N F.ROT         N R.ROT          N/IZZ           A1FR BOD        A1RR BOD          PRR
 -0.42003E+04    0.00000E+00     0.11675E+05     0.35732E+05    -0.43407E+05     0.69304E-04    -0.16732E+01     0.27976E+01     0.00000E+00
    BETA FS         BETA HT         BETA VT         BETA FR         BETA RR           WIHT           B1FR BOD        B1RR BOD          QRR
  0.26726E+01    0.26736E+01    -0.26736E+01     0.26910E+01    -0.55353E+01    -0.14742E+02    -0.87741E+00    -0.21449E+01     0.00000E+00
    ALPH FS         ALPH HT         ALPH VT          ATWFR           ATWRR            VIVT           HFR BODY        HRR BODY          LFW
 -0.51674E+01   -0.65037E+01    -0.35256E+01     0.00000E+00     0.00000E+00     0.00000E+00    -0.51314E+01     0.51545E+02     0.17352E+05
     VINTF           CLHT            CLVT            BTWFR           BTWRR            WIRR           YFR BODY        YRR BODY        DELONUD
  0.75942E+01   -0.33964E+00    -0.19341E+00     0.00000E+00     0.00000E+00    -0.13853E+02    -0.53604E+03    -0.57149E+02     0.18640E+04
      WIFS           CDHT            CDVT            TTWFR           TTWRR           AIC MEF         BIC MEF          AICRR           BICRR
 -0.58155E+01    0.31679E-01     0.24662E-01    -0.19700E+02    -0.17997E+02     0.00000E+00     0.00000E+00    -0.13049E+01     0.16838E+01
```

```
U T T A S        S T A B I L I T Y   A N D   C O N T R O L   D E R I V A T I V E S

      G.W. = 16824.91  LBS      VEL. =    140.00  KTS      ALT. =   600.00  FT
      C.G. =     -9.20  IN       R/C =       0.00  FPM      TEMP =    59.00  DEG

               L/IXX      M/IYY      N/IZZ       X/M        Y/M        Z/M

DELB          -0.2010    -0.4959    -0.0353     0.3056     0.0162     9.0941
DELS           1.4431     0.0634     0.0013    -0.0560     1.0693     1.4633
DELR          -1.1000    -0.1142     0.8331     0.3269    -1.9861     6.1761
DELC           0.3533     0.1342     0.0175     0.4489     0.3898    -9.9400
P             -3.4634     0.1916    -0.0737    -1.0740    -2.1825    -2.6717
Q             -1.3148    -1.7769    -0.3469     0.1902    -0.9789    -0.3497
R              0.7898    -0.0761    -1.0142    -0.5933     2.1197     3.5644
U              0.0036     0.0003    -0.0017    -0.0505    -0.0014     0.0196
V             -0.0345    -0.0062     0.0193     0.0032    -0.1724    -0.0392
W              0.0191     0.0117    -0.0026     0.0475     0.0000    -0.7972
IHT           -0.2382    -3.6275     0.0291    -1.2136    -0.4007    -2.0672
```

```
        UTTAS          STABILITY AND CONTROL DERIVATIVES

         ADFR     A1SDFR    B1SDFR     LHB BDF     MHB BDF   HFR BOD     YFR BOD    THRUST F    THRUST T    LIFT HT

DELB   -0.9320   -3.5646   -0.4737    -1258.93    -9473.43    -434.45        5.07    -4892.40        3.88      -81.82
DELS   -0.1341   -0.0724    1.8393     4598.20     -192.51       0.64      577.82     -664.35      -20.21      113.44
DELR   -0.5931   -2.1592   -0.2767     -735.49    -5738.33    -294.94       11.93    -3071.28    -1144.14     -267.41
DELC    1.1002    0.9239    0.5167     1373.35     2455.14      31.84      -41.23     5176.05      268.73       10.10
P       0.2079    1.9671   -5.0034   -13329.63     5214.91     654.19     -359.15     1285.64     -261.70     -193.44
Q      -0.2812   -5.7920   -1.8135    -4319.79   -15393.28    -321.51     -705.91    -1639.02      200.14    -1745.28
R      -0.2128    0.2263   -0.3909     -855.28      915.10     134.62       -1.91    -1975.55      686.48      174.94
U      -0.0075    0.0179    0.0004        1.16       47.04       8.53        0.98       -8.95        3.41        2.16
V       0.0008    0.0082   -0.0232      -61.71       21.79       0.32       -9.40        8.46      -22.37      -19.80
W       0.0702    0.0510    0.0417      118.39      135.62      -9.21       -3.15      370.70        3.53      -15.88
IHT    -0.2664   -0.1134   -0.2644     -702.72     -314.57     135.47       94.37    -3969.19     -320.77    -5113.82
  = 0:
```

OF POOR QUALITY

APPENDIX C

Appendix C contains the following pilot rating data arranged in primary and secondary matrices.

C-1 Phase 1B/1C Primary Matrix for Acceleration/Deceleration Task-VMC

C-2 Phase 1B/1C Primary Matrix for Acceleration/Deceleration Task - IMC

C-3 Phase 1B/1C Primary Matrix for NOE Task - VMC

C-4 Phase 1B/1C Primary Matrix for NOE Task - IMC

C-5 Phase 1B/1C Primary Matrix for 30 Kt Slalom Task - VMC

C-6 Phase 1B/1C Primary Matrix for 30 Kt Slalom Task - IMC

C-7 Phase 1B/1C Primary Matrix for Bob-Up Task - VMC

C-8 Phase 1B/1C Primary Matrix for Bob-Up Task - IMC

C-9 Phase 1B/1C Secondary Matrices for 30-Kt Slalom Task - (2+1+1)

C-10 Phase 1B/1C Secondary Matrices for 30-Kt Slalom Task - (3+1) Pedal

C-11 Phase 1B/1C Secondary Matrices for 30-Kt Slalom Task - (3+1) Collective

C-12 Phase 1B/1C Secondary Matrices for 30-Kt Slalom Task - (4+0) MSI-SS

C-13 Phase 1B/1C Secondary Matrices For 30 Kt Slalom Task - (4+0) MSI-SD2

C-14 Phase 1B/1C Secondary Matrices for Bob-Up Task - (2+1+1)

C-15 Phase 1B/1C Secondary Matrices for Bob-Up Task -(3+1) Pedal

C-16 Phase 1B/1C Secondary Matrices for Bob-Up Task -(3+1) Collective

C-17 Phase 1B/1C Secondary Matrices for Bob-Up Task -(4+0) MSI-SS

C-18 Phase 1B/1C Secondary Matrices for Bob-Up Task - (4+0) MSI-SD2

C-19 Phase 1B/1C Secondary Matrices for NOE Task -(2+1+1)

C-20 Phase 1B/1C Secondary Matrices for NOE Task - (3+1) Pedal

C-21 Phase 1B/1C Secondary Matrices for NOE Task - (3+1) Collective

C-22 Phase 1B/1C Secondary Matrices for NOE Task - (4+0) MSI-SS

C-23 Phase 1B/1C Secondary Matrices for NOE Task - (4+0) MSI-SD2

C-24 Phase 1B/1C Secondary Matrices for Accel/Decel Task - (2+1+1)

C-25 Phase 1B/1C Secondary Matrices for Accel/Decel Task - (3+1) Pedal

C-26 Phase 1B/1C Secondary Matrices for Accel/Decel Task - (3+1) Collective

C-27 Phase 1B/1C Secondary Matrices for Accel/Decel Task - (4+0) MSI-SS

C-28 Phase 1B/1C Secondary Matrices for Accel/Decel Task - (4+0) MSI-SD2

C-29 Phase 2A Primary Matrix for Bob-Up Task (Old Shaping) - VMC

C-30 Phase 2A Primary Matrix for Precision Hover Task (Old Shaping) - VMC

C-31 Phase 2A Primary Matrix for NOE Task (Old Shaping) - VMC

C-32 Phase 2A Primary Matrix for NOE Task - VMC

C-33 Phase 2A Primary Matrix for NOE Task - VMC

C-34 Phase 2A Primary Matrix for Bob-Up Task - VMC

C-35 Phase 2A Primary Matrix for Bob-Up Task - VMC

C-36 Phase 2A Primary Matrix for Precision Hover Task - VMC

C-37 Phase 2A Primary Matrix for Precision Hover Task - VMC

C-38 Phase 2A Primary Matrix for 90-Kt Slalom Task TC On - VMC

C-39 Phase 2A Primary Matrix for 90-Kt Slalom Task TC Off - VMC

C-40 Phase 2A Primary Matrix for Decel in Turn, Left Turn -TC On - VMC

C-41 Phase 2A Primary Matrix for Decel in Turn, Left Turn -TC Off - VMC

C-42 Phase 2A Primary Matrix for Decel in Turn, Right Turn - TC On - VMC

C-43 Phase 2A Primary Matrix for Decel in Turn, Right Turn -TC Off - VMC

C-44 Phase 2A Primary Matrix for Decel/Approach Task - VMC

C-45 Phase 2A Primary Matrix for 140-Kt Slalom Task TC On - VMC

C-46 Phase 2A Primary Matrix for 140 Kt Slalom Task - TC Off - VMC

C-47 Phase 2A Secondary Matrices for Bob-Up Task - (4+0) MSI-SD2

C-48 Phase 2A Secondary Matrices for Bob-up Task (Old Shaping) - (4-0) MSI-SD2

C-49 Phase 2A Secondary Matrices for Bob-up Task - (4+0) MSI-SD3

C-50 Phase 2A Secondary Matrices for Bob-up Task (Old Shaping) - (4+0) MSI-SD3

C-51 Phase 2A Secondary Matrices for Bob-Up Task -(3+1) C MSI-SD3, MSI-SD2

C-53 Phase 2A Secondary Matrices for Bob-Up Task - (3+1) C MSI-SD3, MSI-SS

C-54 Phase 2A Secondary Matrices for NOE Task -(4+0) MSI-SD2

C-55 Phase 2A Secondary Matrices for NOE Task (Old Shaping) - (4+0) MSI-SD2

C-56 Phase 2A Secondary Matrices for NOE Task -(4+0) MSI-SD3

C-57 Phase 2A Secondary Matrices for NOE Task (Old Shaping) - (4+0) MSI-SD3

C-58 Phase 2A Secondary Matrices for NOE Task -(3+1) C MSI-SD3, MSI-SD2

C-59 Phase 2A Secondary Matrices for NOE Task (Old Shaping) - (4+0) MSI-SD3, MSI-SD2

C-60 Phase 2A Secondary Matrices for NOE Task -(3+1) C MSI-SD3, MSI-SS

C-61 Phase 2A Secondary Matrices for NOE Task - (2+1+1)

C-62 Phase 2A Secondary Matrices for Precision Hover Task - (4+0) MSI-SD2

C-63 Phase 2A Secondary Matrices for Precision Hover (Old Shaping) - (4+0) MSI-SD2

C-64 Phase 2A Secondary Matrices for Precision Hover Task - (4+0) MSI-SD3

C-65 Phase 2A Secondary Matrices for Precision Hover Task (Old Shaping) - (4+0) MSI-SD3

C-66 Phase 2A Secondary Matrices for Precision Hover Task - (3+1) C SMI-SD3, MSI-SD2

C-67 Phase 2A Secondary Matrices for Precision Hover Task (Old Shaping) - (3+1) C MSI-SD3, MSI-SD2

C-68 Phase 2A Secondary Matrices for Precision Hover Task - (3+1) C MSI-SD3, MSI-SS

C-69 Phase 2B Primary Matrix for Precision Hover (Grip Comparison) - VMC

C-70 Phase 2B Primary Matrix for NOE Task (Grip Comparison) -VMC

C-71 Phase 2B Primary Matrix for Bob-Up Task (Grip Comparison) - VMC

C-72 Phase 2B Primary Matrix for 90 Kt Slalom Task TC On - VMC

C-73 Phase 2B Primary Matrix for Bob-Up Task In Calm Air - IMC

C-74 Phase 2B Primary Matrix for Bob-Up Task - IMC with Wind Shear and Turbulence

C-75 Phase 2B Primary Matrix for Precision Hover Task - In Calm Air - IMC

C-76 Phase 2B Primary Matrix for Precision Hover Task - IMC with Wind Shear and Turbulence

C-77 Phase 2B Primary Matrix for NOE Task - IMC

C-78 Phase 2B Primary Matrix for 30-Kt Slalom Task - IMC

C-79 Phase 2B Primary Matrix for 90-Kt Slalom Task - IMC

C-80 Phase 2B Primary Matrix for Straight Decel Task - IMC

C-81 Phase 2B Primary Matrix for Left Turning Decel to Hover Task - IMC

C-82 Phase 2B Primary Matrix for Right Turning Decel to Hover Task - IMC

PHASE 1B/1C PRIMARY MATRICIES

OF POOR QUALITY

PHASE 1B/1C PRIMARY MATRIX FOR ACCELERATION/DECELERATION TASK
VMC

CMD/STAB / CONFIG.	AC/RA				RA/AT				RA/AT				AT/AT				AT/LV			
	PILOT	AVERAGE	RANGE	NO. POINTS	PILOT	AVERAGE	RANGE	NO. POINTS	PILOT	AVERAGE	RANGE	NO. POINTS	PILOT	AVERAGE	RANGE	NO. POINTS	PILOT	AVERAGE	RANGE	NO. POINTS
(4+0) MSI-SS	A	5.5	5-6	2	A	5.33	5-6	3	A	6		1	A	4	3-5	4	A	3	3-3	8
	B				B				B				B	5.33	4-5	3	B	4.3	3-7	9
	C				C	3		1	C				C				C	1.5		1
	D				D				D				D				D			
	$\bar{x}$ - 5.5 σ - .707				$\bar{x}$ - 4.75 σ - 1.258				$\bar{x}$ - 6.0				$\bar{x}$ - 4.14 σ - .899				$\bar{x}$ - 3.57 σ - 1.25			
(4+0) MSI-SD2	A	7		1	A	5.5	5-6	2	A	6		1	A	4.5		1	A	4.66	4-5	3
	B				B	4		1	B	4.5	4-5	2	B	3		1	B	2.66	2-3	3
	C				C	4		1	C	3		1	C	3		1	C	2.75	2.5-3	2
	D				D				D				D				D			
	$\bar{x}$ - 7.0				$\bar{x}$ - 4.75 σ - .457				$\bar{x}$ - 4.5 σ - 1.29				$\bar{x}$ - 3.5 σ - .866				$\bar{x}$ - 3.43 σ - 1.11			
(3+1)C	A	5.5		1	A				A	4		1	A	3		1	A	2.5	2.5-2.5	2
	B				B				B	3		1	B	3		1	B	2.5	2-3	2
	C				C				C				C				C			
	D				D				D				D				D			
	$\bar{x}$ - 5.5 σ -				$\bar{x}$ - σ -				$\bar{x}$ - 3.5 σ - .707				$\bar{x}$ - 3.0 σ - .707				$\bar{x}$ - 2.5 σ - .408			
(3+1)P	A	5.5		1	A	4.66	4-5	3	A				A	3		1	A	3		1
	B				B	4		1	B				B	3		1	B	2		1
	C				C				C				C				C			
	D				D				D				D				D			
	$\bar{x}$ - 5.5				$\bar{x}$ - 4.5 σ - 0.58				$\bar{x}$ - σ -				$\bar{x}$ - 3 σ - 0				$\bar{x}$ - 2.5 σ - .707			
(3+1)P	A	5		1	A	4		1	A				A	2.5		1	A	2.5		1
	B				B				B				B				B			
	C				C	3		1	C				C	2		1	C	2		1
	D				D				D				D				D			
	$\bar{x}$ - 5.0				$\bar{x}$ - 3.5 σ - .707				$\bar{x}$ - σ -				$\bar{x}$ - 2.25 σ - .353				$\bar{x}$ - 2.25 σ - .353			

PHASE 1B/1C PRIMARY MATRIX FOR ACCELERATION/DECELERATION TASK

IMC

CMD/STAB CONFIG.	PILOT	AC/RA AVERAGE	AC/RA RANGE	AC/RA NO POINTS	RA/AT AVERAGE	RA/AT RANGE	RA/AT NO POINTS	RA/LV AVERAGE	RA/LV RANGE	RA/LV NO POINTS	AT/AT AVERAGE	AT/AT RANGE	AT/AT NO POINTS	AT/LV AVERAGE	AT/LV RANGE	AT/LV NO POINTS
(4+0) MSI-SS	A	7		1	5.5		1	6		1	5	5-5	2	5	5-5	2
	B										3.5	3-4	2	3	3-3	2
	C													L		
	D															
		$\bar{x}$ - 7.0			$\bar{x}$ - 5.5			$\bar{x}$ - 6.0			$\bar{x}$ - 4.25	σ - .957		$\bar{x}$ - 4.0	σ - 1.15	
(4+0) MSI-SD2	A	6		1	6.75	5.5-8	2	8.5		1	5	4-7	3	5.25	4-7	4
	B										4	4-4	3	4	4-4	2
	C				4		1				3.5	2.5-4	3	3	3-3	2
	D													4		1
		$\bar{x}$ - 6.0			$\bar{x}$ - 5.83	σ - 2.02		$\bar{x}$ - 8.5			$\bar{x}$ - 4.17	σ - 1.17		$\bar{x}$ - 4.33	σ - 1.32	
(3+1)P	A	6		1	6.5	6-7	2				6	6-6	2	6	6-6	2
	B										3		1	4		1
	C															
	D															
		$\bar{x}$ - 6.0			$\bar{x}$ - 6.5	σ - 0		$\bar{x}$ -	σ -		$\bar{x}$ - 5	σ - 1.7		$\bar{x}$ - 5.3	σ - 1.15	
(3+1)C	A	6		1	5		1				4.42	4-4.5	3	4.58	4-5	6
	B				4		1				3		1	3		1
	C															
	D													4		1
		$\bar{x}$ - 6.0			$\bar{x}$ - 4.5	σ - .707		$\bar{x}$ -	σ -		$\bar{x}$ - 4.06	σ - .774		$\bar{x}$ - 4.3	σ - .70	
(2+1+1)	A	6		1	5.5	5.5-5.5	2				4.5	4-5	2	4.5		1
	B															
	C				5		1				3	3-3	2	4	3-5	2
	D															
		$\bar{x}$ - 6.0			$\bar{x}$ - 5.33	σ - .28		$\bar{x}$ -	σ -		$\bar{x}$ - 3.75	σ - .957		$\bar{x}$ - 4.16	σ - 1.04	

ORIGINAL PAGE IS
OF POOR QUALITY

PHASE 1B/1C PRIMARY MATRIX FOR NOE TASK
VMC

CMD/STAB / CONFIG.	PILOT	AC/RA			RA/AT			RA/LV			AT/AT			AT/LV		
	PILOT	AVERAGE	RANGE	NO. POINTS	AVERAGE	RANGE	NO. POINTS	AVERAGE	RANGE	NO. POINTS	AVERAGE	RANGE	NO. POINTS	AVERAGE	RANGE	NO. POINTS
(4+0) MSI-SS	A	7	7–7	2	4.9	4.5–5.5	5	5.16	5–5.5	6	3.78	3–4.5	7	3.30	2.5–5	13
	B										6	6–6	2	3.5	3–4	2
	C	4.83	4–6	3	4.25	4–5	4				3.16	2.5–4	3	2.25	2–2.5	6
	D															
		$\bar{x}$ = 5.7 σ = 1.39			$\bar{x}$ = 4.61 σ = .546			$\bar{x}$ = 5.16 σ = .258			$\bar{x}$ = 4.0 σ = 1.10			$\bar{x}$ = 3.02 σ = .782		
(4+0) MSI-SD2	A	7		1	5.25	4.5–6	2	5.25		1	3.75	3–4.5	2	2.75	2.5–3	2
	B				7		1	4.5		1	4.5		1	3.37	3–4.5	4
	C	7		1	4.5		1				3		1	2.5		1
	D							6		1	6		1	4.5	4–5	2
		$\bar{x}$ = 7.0 σ = 0			$\bar{x}$ = 5.5 σ = 1.22			$\bar{x}$ = 5.25 σ = .73			$\bar{x}$ = 4.2 σ = .758			$\bar{x}$ = 3.38 σ = .893		
(3+1)P	A	7	7–7	2	5.3	4–7	6	5		1	3.95	2.5–6	6	2.75	2.5–3	2
	B				5		1				4		1	4		1
	C	4	4–4	2	2.75	2.5–3	2				2	2–2	2	1.75	1.5–2	2
	D															
		$\bar{x}$ = 5.5 σ = 1.73			$\bar{x}$ = 4.72 σ = 1.4			$\bar{x}$ = 5.0			$\bar{x}$ = 3.5 σ = 1.4			$\bar{x}$ = 2.6 σ = .96		
(3+1)C	A	7		1	4.87	4.5–6	8	5.5	5.5–5.5	2	3.4	3–4	5	2.9	2.5–3	5
	B				5	5–5	2				3.67	3–4	3	3	3–3	2
	C				4		1							4		1
	D															
		$\bar{x}$ = 7.0			$\bar{x}$ = 4.8 σ = .51			$\bar{x}$ = 5.5			$\bar{x}$ = 3.5 σ = .534			$\bar{x}$ = 3.06 σ = .417		
(2+1+1)	A	6.3	5.5–7	5	4.1	3–4.5	5				3		1	2.5		1
	B				5		1				3		1			
	C	4.5		1	3.25	2.5–4	2				2.5		1	2.5		1
	D															
		$\bar{x}$ = 6.0 σ = .95			$\bar{x}$ = 4.0 σ = .85			$\bar{x}$ = σ =			$\bar{x}$ = 2.83 σ = .288			$\bar{x}$ = 2.5 σ = 0		

PHASE 1B/1C PRIMARY MATRIX FOR NOE TASK
IMC

CMD/STAB / CONFIG.		AC/RA			RA/AT			RA/LV			AT/AT			AT/LV		
	PILOT	AVERAGE	RANGE	NO. POINTS	AVERAGE	RANGE	NO. POINTS	AVERAGE	RANGE	NO. POINTS	AVERAGE	RANGE	NO. POINTS	AVERAGE	RANGE	NO. POINTS
(4+0) MSI-SS	A	9		1	7.5	7-8	2	7.5		1	7		1	6.5	5-8	4
	B													7		1
	C															
	D															
		$\bar{x}$ = 9.0			$\bar{x}$ = 7.5 σ = 0			$\bar{x}$ = 7.5			$\bar{x}$ = 7.0			$\bar{x}$ = 6.6 σ = 1.14		
(4+0) MSI-SD2	A	7.75	7.5-8	2	7		1	8		1	4.16	3-5	3	4.75	3-6	6
	B										9.5	9-10	2	5.66	5.5-6	3
	C										6.87	5-10	4	5.5	5-6	2
	D										5.5		1	5.83	5.5-6	3
		$\bar{x}$ = 7.75 σ = .7			$\bar{x}$ = 7.0 σ =			$\bar{x}$ = 8.0			$\bar{x}$ = 6.45 σ = 2.44			$\bar{x}$ = 5.28 σ = .932		
(3+1)P	A				7	7-7	2	8		1	6	6-6	2	6	6-6	2
	B													5.5	5-6	2
	C	8		1	6		1				5.5		1	4.5	4.5-4.5	2
	D															
		$\bar{x}$ = 8.0			$\bar{x}$ = 6.67 σ = .577			$\bar{x}$ = 8.0			$\bar{x}$ = 5.83 σ = .288			$\bar{x}$ = 5.33 σ = .753		
(3+1)C	A	7.5		1	6	6-6	2	7		1	5		1	4.25	3-4.5	6
	B				6		1				6	5-7	2	5.25	5-5.5	2
	C													6		1
	D													6		
		$\bar{x}$ = 7.5			$\bar{x}$ = 6.0 σ = 0			$\bar{x}$ = 7.0			$\bar{x}$ = 5.67 σ = 1.15			$\bar{x}$ = 4.9 σ = .9		
(2+1+1)	A	7		1	5.5	5.5-5.5	3	7		1	4.5	4.5-4.5	3	4.5	4.5-4.5	3
	B															
	C				8		1				6		1	5.25	4.5-6	5
	D															
		$\bar{x}$ = 7.0			$\bar{x}$ = 6.12 σ = 1.25			$\bar{x}$ = 7.0			$\bar{x}$ = 5.0 σ = .866			$\bar{x}$ = 4.84 σ = .516		

ORIGINAL PAGE IS
OF POOR QUALITY

PHASE 1B/1C PRIMARY MATRIX FOR 30-KT SLALOM TASK
VMC

CMD/STAB / CONFIG.		AC/RA			RA/AT			RA/LV			AT/AT			AT/LV		
	PILOT	AVERAGE	RANGE	NO. POINTS	AVERAGE	RANGE	NO. POINTS	AVERAGE	RANGE	NO. POINTS	AVERAGE	RANGE	NO. POINTS	AVERAGE	RANGE	NO. POINTS
(4+0) MSI-SS	A	6	6-6	3	5.4	5-7	5	5.5	5-6	2	4.25	4-5	4	3.03	3-3	8
	B							-			4.83	4-6	3	4.57	3-7	10
	C				2.75	2.5-3	2	4		1				2		1
	D															
		$\bar{x}$ - 6.0 σ - 0			$\bar{x}$ - 4.64 σ - 1.38			$\bar{x}$ - 5.0 σ - .816			$\bar{x}$ - 4.5 σ - .707			$\bar{x}$ - 3.78 σ - 1.29		
(4+0) MSI-SD2	A	7		1	5	4.5-5.5	2	6		1	4.5		1	3.5	3-4.5	3
	B				4		1	3.5	3-4	2	3		1	2.58	2-3	3
	C				4.5		1	5		1	4		1	3	3-3	2
	D															
		$\bar{x}$ - 7.0			$\bar{x}$ - 4.63 σ - .69			$\bar{x}$ - 4.5 σ - 1.29			$\bar{x}$ - 3.83 σ - .737			$\bar{x}$ - 3.03 σ - .643		
(3+1)P	A	6		1	4.8	4.5-5	3				3.37	2.5-4.5	4	2.75	2.5-3	2
	B				3		1				4		1	3	3-3	2
	C															
	D				6		1									
		$\bar{x}$ - 6.0			$\bar{x}$ - 4.7 σ - 1.09			$\bar{x}$ - σ -			$\bar{x}$ - 3.5 σ - 0.93			$\bar{x}$ - 2.87 σ - .25		
(3+1)C	A	7		1	4		1	6		1	3		1	3	3-3	2
	B				4		1				3		1	2		1
	C															
	D															
		$\bar{x}$ - 7.0			$\bar{x}$ - 4.0 σ - 0			$\bar{x}$ - 6.0 σ -			$\bar{x}$ - 3.0 σ - 0			$\bar{x}$ - 2.66 σ - .577		
(2+1+1)	A	5	4.5-5.5	6	4.5	4-5	4	5		1	3	3-3	3	3	3-3	3
	B															
	C				2.3	2-3	3				1.66	1.5-2	3	2	2-2	3
	D															
		$\bar{x}$ - 5.0 σ - .447			$\bar{x}$ - 3.57 σ - 1.27			$\bar{x}$ - 5.0			$\bar{x}$ - 2.3 σ - .75			$\bar{x}$ - 2.5 σ - .55		

PHASE 1B/1C PRIMARY MATRIX FOR 30-KT SLALOM TASK

IMC

CMD/STAB / CONFIG.	PILOT	AC/RA			RA/AT			RA/LV			AT/AT			AT/LV		
		AVERAGE	RANGE	NO POINTS	AVERAGE	RANGE	NO POINTS	AVERAGE	RANGE	NO POINTS	AVERAGE	RANGE	NO POINTS	AVERAGE	RANGE	NO POINTS
(4+0) MSI-SS	A	8.5		1	6		1	6		1	4.625	4.5-5	2	4.5	4-5	2
	B							10		1	7	7-7	2	4	3-5	2
	C															
	D															
		$\bar{x}$ = 8.5			$\bar{x}$ = 6.0			$\bar{x}$ = 8.0 σ = 2.8			$\bar{x}$ = 5.81 σ = 1.375			$\bar{x}$ = 4.25 σ = .957		
(4+0) MSI-SD2	A	7		1	6.75	65-8	2	7.5		1	5	4-6	4	4.1	3-5	5
	B							9		1	6.5	6-7	4	3		1
	C				6.5	6-7	2				3		1	3	3-3	2
	D													6	6-6	3
		$\bar{x}$ = 7.0			$\bar{x}$ = 7.3 σ = 1.78			$\bar{x}$ = 8.25 σ = 1.06			$\bar{x}$ = 5.44 σ = 1.36			$\bar{x}$ = 4.32 σ = 1.27		
(3+1)P	A	7		1	7.25	7-8	6				5.9	4.5-6	5	5.1		2
	B										8		1	8		1
	C															
	D													5.67	5-7	3
		$\bar{x}$ = 7.0			$\bar{x}$ = 1.25 σ = .42			$\bar{x}$ = σ =			$\bar{x}$ = 6.25 σ = 1.63			$\bar{x}$ = 5.61 σ = 1.2		
(3+1)C	A	7		1	5.5	5.5-55	2				4.42	4-5	3	4	3-4.5	6
	B				7.5		1				5.5		1			
	C															
	D				7		1							5		1
		$\bar{x}$ = 7.0			$\bar{x}$ = 6.4 σ = 1.03			$\bar{x}$ = σ =			$\bar{x}$ = 4487 σ = .625			$\bar{x}$ = 4.2 σ = .59		
(2+1+1)	A	7		1	5.63	5-6	2				5	4.5-5.5	2	4		1
	B															
	C				6		1				4.25	4-4.5	2	5	5-5	2
	D															
		$\bar{x}$ = 7.0			$\bar{x}$ = 5.75 σ = .43			$\bar{x}$ = σ =			$\bar{x}$ = 4.5 σ = .707			$\bar{x}$ = 4.66 σ = .577		

OF POOR QUALITY

PHASE 1B/1C PRIMARY MATRIX FOR BOB-UP TASK
VMC

CMD/STAB / CONFIG.	PILOT	AC/RA AVERAGE	AC/RA RANGE	AC/RA NO POINTS	RA/AT AVERAGE	RA/AT RANGE	RA/AT NO POINTS	RA/LV AVERAGE	RA/LV RANGE	RA/LV NO POINTS
(4+0) MSI-SS	A				5.5		1	6		
	B									
	C									
	D									
		x̄ =	σ =		x̄ = 5.5			x̄ = 6.0		
(4+0) MSI-SD2	A				6		1	6		1
	B				7		1	4		1
	C									
	D							5		1
		x̄ =	σ =		x̄ = 6.5	σ = .707		x̄ = 5.0	σ = 1.0	
(3+1)P	A				5.7	4.5-8	5	4.5		1
	B									
	C									
	D									
		x̄ =	σ =		x̄ = 5.7			x̄ = 4.5	σ =	
(3+1)C	A				4.5		1			
	B									
	C				5		1			
	D				6		1			
		x̄ =	σ =		x̄ = 4.5	σ = 1.5		x̄ =		
(2+1+1)	A				4.5		1			
	B									
	C									
	D									
		x̄ =	σ =		x̄ = 4.5			x̄ =	σ =	

CMD/STAB / CONFIG.	PILOT	AT/AT AVERAGE	AT/AT RANGE	AT/AT NO POINTS	AT/LV AVERAGE	AT/LV RANGE	AT/LV NO POINTS
(4+0) MSI-SS	A	3	3-3	2	3.5	3-4	2
	B	5	4-6	2	4.5	4-5	2
	C						
	D						
		x̄ = 4.0	σ = 1.73		x̄ = 4.0	σ = 0.816	
(4+0) MSI-SD2	A	4		1	3		1
	B	4		1	4.5	3-6	4
	C						
	D				4	4-4	2
		x̄ = 4.0	σ = 0		x̄ = 4.14	σ = 1.46	
(3+1)P	A	4.16	4-4.5	3			
	B						
	C						
	D						
		x̄ = 4.16	σ = .29		x̄ =	σ =	
(3+1)C	A				2.5	2.5-2.5	2
	B						
	C				3.5	3-4	2
	D				4		1
		x̄ =	σ =		x̄ = 3.2	σ = 0.76	
(2+1+1)	A						
	B						
	C						
	D				3.5	3-4	2
		x̄ =	σ =		x̄ = 3.5	σ = 0.707	

CMD/STAB / CONFIG.	PILOT	LV/LV AVERAGE	LV/LV RANGE	LV/LV NO POINTS	LV/PH AVERAGE	LV/PH RANGE	LV/PH NO POINTS
(4+0) MSI-SS	A						
	B						
	C						
	D						
		x̄ =	σ =		x̄ =	σ =	
(4+0) MSI-SD2	A						
	B						
	C						
	D	3		1			
		x̄ = 3.0			x̄ =	σ =	
(3+1)P	A						
	B						
	C						
	D						
		x̄ =	σ =		x̄ =	σ =	
(3+1)C	A						
	B						
	C						
	D						
		x̄ =	σ =		x̄ =	σ =	
(2+1+1)	A						
	B						
	C						
	D						
		x̄ =	σ =		x̄ =	σ =	

PHASE 1B/1C PRIMARY MATRIX FOR BOB-UP TASK

IMC

CMD/STAB / CONFIG.	PILOT	AC/RA			RA/AT			RA/LV			AT/AT		
		AVERAGE	RANGE	NO. POINTS	AVERAGE	RANGE	NO. POINTS	AVERAGE	RANGE	NO. POINTS	AVERAGE	RANGE	NO. POINTS
(4+0) MSI-SS	A							8.5		1	6		1
	B												
	C												
	D												
		$\bar{x}$ =	σ =		$\bar{x}$ =	σ =		$\bar{x}$ = 8.5			$\bar{x}$ = 6.0		
(4+0) MSI-SD2	A				8		1	7.5		1	4.33	4-4.5	3
	B										5		1
	C										6.5	6-7	2
	D												
		$\bar{x}$ =	σ =		$\bar{x}$ = 8.0			$\bar{x}$ = 7.5			$\bar{x}$ = 5.16	σ = 1.12	
(3+1)P	A	10		1	6.5	6-7	2				3.5	3-4.5	3
	B										4.5	4-5	2
	C												
	D												
		$\bar{x}$ = 10.0			$\bar{x}$ = 6.5	σ = .707		$\bar{x}$ =	σ =		$\bar{x}$ = 3.9	σ = .89	
(3+1)C	A				7.25	6-8	4				4.33	3-5	3
	B												
	C												
	D												
		$\bar{x}$ =	σ =		$\bar{x}$ = 7.25	σ = .95		$\bar{x}$ =	σ =		$\bar{x}$ = 4.33	σ = 1.15	
(2+1+1)	A	7		1	6.67	6-7	3				4		1
	B												
	C										6		1
	D												
		$\bar{x}$ = 7.0			$\bar{x}$ = 6.67	σ = .58		$\bar{x}$ =	σ =		$\bar{x}$ = 5.0	σ = .707	

CMD/STAB / CONFIG.	PILOT	AT/LV			LV/LV			LV/PH		
		AVERAGE	RANGE	NO. POINTS	AVERAGE	RANGE	NO. POINTS	AVERAGE	RANGE	NO. POINTS
(4+0) MSI-SS	A	5	5-5	3	4.5		1	4		1
	B				3	3-3	2	3		1
	C									
	D									
		$\bar{x}$ = 5.0	σ = 0		$\bar{x}$ = 3.5	σ = .86		$\bar{x}$ = 3.5	σ = .707	
(4+0) MSI-SD2	A	5.29	4-8	7	4	4-4	2	3.5	3-4	2
	B	3.5	3-4	2	4		1			
	C	5.33	5-5.5	3						
	D	4		1						
		$\bar{x}$ = 4.92	σ = 1.22		$\bar{x}$ = 4.0	σ = 0		$\bar{x}$ = 3.5	σ = .7	
(3+1)P	A	4	3-4.5	3	3.125	2.5-4	4			
	B	3.75	3-4.5	2	2		1			
	C									
	D									
		$\bar{x}$ = 3.9	σ = .82		$\bar{x}$ = 2.9	σ = .74		$\bar{x}$ =	σ =	
(3+1)C	A	3.9	3-5	4	2.75	2.5-3	4			
	B									
	C	5		1						
	D	4		1						
		$\bar{x}$ = 4.08	σ = .91		$\bar{x}$ = 2.75	σ = .29		$\bar{x}$ =	σ =	
(2+1+1)	A	4	4-4	2	4		1			
	B									
	C	4.66	4.5-5	3	3		1			
	D									
		$\bar{x}$ = 4.43	σ = .47		$\bar{x}$ = 3.5	σ = .707		$\bar{x}$ =	σ =	

PHASE 1B/1C SECONDARY MATRICIES

PILOT RATINGS FOR SECONDARY MATRIX

PHASE: 1B/1C　　**CONTROLLER CONFIGURATION :** (2+1+1)　　**TASK:** SLALOM

VMC

VERTICAL SCAS CONFIGURATION	AC/RA			RA/AT			AT/AT			AT/LV		
	$\ddot{\psi}/\dot{\psi}$	$\ddot{\psi}/\psi_H$	$\dot{\psi}/\psi_H$	$\ddot{\psi}/\dot{\psi}$	$\ddot{\psi}/\psi_H$	$\dot{\psi}/\psi_H$	$\ddot{\psi}/\dot{\psi}$	$\ddot{\psi}/\psi_H$	$\dot{\psi}/\psi_H$	$\ddot{\psi}/\dot{\psi}$	$\ddot{\psi}/\psi_H$	$\dot{\psi}/\psi_H$
$\dot{h}/h_H$	5A	5.5A		3C 4.5 A $\bar{x}$ = 3.75 σ = 1.06	3C							
$\ddot{h}/h_H$			5A		5C							
$\ddot{h}/\dot{h}$			6A		5C 7C $\bar{x}$ = 6 σ = 1.41	5.5 A 5 A 4 A 8C 5 A 5.5 A $\bar{x}$ = 5.5 σ = 1.34		4C	5A			

IMC

VERTICAL SCAS CONFIGURATION	AC/RA			RA/AT			AT/AT			AT/LV		
	$\ddot{\psi}/\dot{\psi}$	$\ddot{\psi}/\psi_H$	$\dot{\psi}/\psi_H$	$\ddot{\psi}/\dot{\psi}$	$\ddot{\psi}/\psi_H$	$\dot{\psi}/\psi_H$	$\ddot{\psi}/\dot{\psi}$	$\ddot{\psi}/\psi_H$	$\dot{\psi}/\psi_H$	$\ddot{\psi}/\dot{\psi}$	$\ddot{\psi}/\psi_H$	$\dot{\psi}/\psi_H$
$\dot{h}/h_H$	7A			7A 6 A $\bar{x}$ = 6.5 σ = .707	6A 7.5A $\bar{x}$ = 6.75 σ = 1.06		5.5 A 7.5 A $\bar{x}$ = 6.5 σ = 1.41	6A 7.5A $\bar{x}$ = 6.75 σ = 1.06		5.5 A		
$\ddot{h}/h_H$												
$\ddot{h}/\dot{h}$					6A		6A			6A		5.5A

DIRECTIONAL SCAS CONFIGURATION

PILOT RATINGS FOR SECONDARY MATRIX

PHASE: 1B/1C **CONTROLLER CONFIGURATION :** (3+1)P **TASK:** SLALom

VERTICAL SCAS CONFIGURATION / DIRECTIONAL SCAS CONFIGURATION

VMC

	AC/RA			RA/AT			AT/AT			AT/LV		
	$\ddot{\psi}/\dot{\psi}$	$\ddot{\psi}/\psi_H$	$\dot{\psi}/\psi_H$	$\ddot{\psi}/\dot{\psi}$	$\ddot{\psi}/\psi_H$	$\dot{\psi}/\psi_H$	$\ddot{\psi}/\dot{\psi}$	$\ddot{\psi}/\psi_H$	$\dot{\psi}/\psi_H$	$\ddot{\psi}/\dot{\psi}$	$\ddot{\psi}/\psi_H$	$\dot{\psi}/\psi_H$
$\dot{h}/h_H$				6A	5.5 A 5.5 A $\bar{x} = 5.5$ $\sigma = 0.0$		4.5 A	6A 5.5 A 4A $\bar{x} = 5.17$ $\sigma = 1.04$				
$\ddot{h}/h_H$						4.5 A 4 B $\bar{x} = 4.25$ $\sigma = 0.353$			5A 5B $\bar{x} = 5.0$ $\sigma = 0.0$			
$\ddot{h}/\dot{h}$			6A		7A	6A		7.5 A	6A 7B $\bar{x} = 6.5$ $\sigma = .707$		6A	4.5 A 5 B $\bar{x} = 4.75$ $\sigma = .353$

IMC

	AC/RA			RA/AT			AT/AT			AT/LV		
	$\ddot{\psi}/\dot{\psi}$	$\ddot{\psi}/\psi_H$	$\dot{\psi}/\psi_H$	$\ddot{\psi}/\dot{\psi}$	$\ddot{\psi}/\psi_H$	$\dot{\psi}/\psi_H$	$\ddot{\psi}/\dot{\psi}$	$\ddot{\psi}/\psi_H$	$\dot{\psi}/\psi_H$	$\ddot{\psi}/\dot{\psi}$	$\ddot{\psi}/\psi_H$	$\dot{\psi}/\psi_H$
$\dot{h}/h_H$					7A			7A			7A 7A 7A $\bar{x} = 7.0$ $\sigma = 0.0$	
$\ddot{h}/h_H$						7A			6A 5.5 A $\bar{x} = 5.75$ $\sigma = .353$			
$\ddot{h}/\dot{h}$						9A 8A $\bar{x} = 8.5$ $\sigma = .707$			7A 7A 7A $\bar{x} = 7.0$ $\sigma = 0.0$			7A

PILOT RATINGS FOR SECONDARY MATRIX

PHASE: 1B/1C

CONTROLLER CONFIGURATION : (3+1)C

TASK: SLALOM

VMC

VERTICAL SCAS CONFIGURATION	AC/RA			RA/AT			AT/AT			AT/LV		
	$\ddot{\psi}/\dot{\psi}$	$\ddot{\psi}/\psi_H$	$\dot{\psi}/\psi_H$	$\ddot{\psi}/\dot{\psi}$	$\ddot{\psi}/\psi_H$	$\dot{\psi}/\psi_H$	$\ddot{\psi}/\dot{\psi}$	$\ddot{\psi}/\psi_H$	$\dot{\psi}/\psi_H$	$\ddot{\psi}/\dot{\psi}$	$\ddot{\psi}/\psi_H$	$\dot{\psi}/\psi_H$
$\dot{h}/h_H$	6A			3B 4.5A $\bar{x}=3.75$ $\sigma=1.06$	3B 4B 5A $\bar{x}=4.0$ $\sigma=1.0$		4B 4.5A $\bar{x}=4.25$ $\sigma=.353$	4B 4.5A $\bar{x}=4.25$ $\sigma=.353$		4A	4A	
$\ddot{h}/h_H$									4B 4A $\bar{x}=4.0$ $\sigma=0.0$			
$\ddot{h}/\dot{h}$									5.5B 5.5A $\bar{x}=5.5$ $\sigma=0.0$			

IMC

VERTICAL SCAS CONFIGURATION	AC/RA			RA/AT			AT/AT			AT/LV		
	$\ddot{\psi}/\dot{\psi}$	$\ddot{\psi}/\psi_H$	$\dot{\psi}/\psi_H$	$\ddot{\psi}/\dot{\psi}$	$\ddot{\psi}/\psi_H$	$\dot{\psi}/\psi_H$	$\ddot{\psi}/\dot{\psi}$	$\ddot{\psi}/\psi_H$	$\dot{\psi}/\psi_H$	$\ddot{\psi}/\dot{\psi}$	$\ddot{\psi}/\psi_H$	$\dot{\psi}/\psi_H$
$\dot{h}/h_H$				5.5A 7A 6A $\bar{x}=6.17$ $\sigma=.764$	5.5A 6A $\bar{x}=5.75$ $\sigma=.353$		5.5A 5A $\bar{x}=5.25$ $\sigma=.353$	8C 5.5A 5.5A $\bar{x}=6.33$ $\sigma=1.44$			7C	
$\ddot{h}/h_H$						5A 5.5A $\bar{x}=5.25$ $\sigma=.353$			5A			
$\ddot{h}/\dot{h}$						7A			7.5A			

DIRECTIONAL SCAS CONFIGURATION

PILOT RATINGS FOR SECONDARY MATRIX

PHASE: 1B/1C **CONTROLLER CONFIGURATION :** (4+0) MSI-SS **TASK:** SLALOM

DIRECTIONAL SCAS CONFIGURATION

VERTICAL SCAS CONFIGURATION

		AC/RA			RA/AT			AT/AT			AT/LV		
		$\ddot{\psi}/\dot{\psi}$	$\ddot{\psi}/\psi_H$	$\dot{\psi}/\psi_H$	$\ddot{\psi}/\dot{\psi}$	$\ddot{\psi}/\psi_H$	$\dot{\psi}/\psi_H$	$\ddot{\psi}/\dot{\psi}$	$\ddot{\psi}/\psi_H$	$\dot{\psi}/\psi_H$	$\ddot{\psi}/\dot{\psi}$	$\ddot{\psi}/\psi_H$	$\dot{\psi}/\psi_H$
VMC	$\dot{h}/h_H$	6A			5A 5.5A $\bar{x}=5.25$ $\sigma=.353$	9A 2C 7A 5A $\bar{x}=5.75$ $\sigma=2.99$		5A 5A 5.5A	7A 6A 7A 5A 5A $\bar{x}=6.0$ $\sigma=1.0$		4A 6A $\bar{x}=5.0$ $\sigma=1.41$	9B 4A $\bar{x}=6.5$ $\sigma=3.53$	
	$\ddot{h}/h_H$												
	$\ddot{h}/\dot{h}$	7A 7A $\bar{x}=7.0$ $\sigma=0.0$			6A 6A $\bar{x}=6.0$ $\sigma=0.0$			7A					
IMC	$\dot{h}/h_H$												
	$\ddot{h}/h_H$												
	$\ddot{h}/\dot{h}$												

PILOT RATINGS FOR SECONDARY MATRIX

PHASE: 1B/1C **CONTROLLER CONFIGURATION :** (4+0) MSI-SD2 **TASK:** SLALOM

	VERTICAL SCAS CONFIGURATION	AC/RA			RA/AT			AT/AT			AT/LV		
		$\ddot{\psi}/\dot{\psi}$	$\ddot{\psi}/\psi_H$	$\dot{\psi}/\psi_H$	$\ddot{\psi}/\dot{\psi}$	$\ddot{\psi}/\psi_H$	$\dot{\psi}/\psi_H$	$\ddot{\psi}/\dot{\psi}$	$\ddot{\psi}/\psi_H$	$\dot{\psi}/\psi_H$	$\ddot{\psi}/\dot{\psi}$	$\ddot{\psi}/\psi_H$	$\dot{\psi}/\psi_H$
VMC	$\dot{h}/h_H$				5.5A	6A 4C 5A 5B $\bar{x} = 5.0$ $\sigma = .816$			4.5 B 5C $\bar{x} = 4.75$ $\sigma = .353$			3B 5A 4C $\bar{x} = 4.0$ $\sigma = 1.0$	
	$\ddot{h}/h_H$												5.5A
	$\ddot{h}/\dot{h}$												
IMC	$\dot{h}/h_H$				5.5 C 6A $\bar{x} = 5.75$ $\sigma = .353$	7A 7C 6C $\bar{x} = 6.67$ $\sigma = .577$			4.5 A 7C 7C 7C $\bar{x} = 6.37$ $\sigma = 1.25$		4A 6A $\bar{x} = 5.0$ $\sigma = 1.41$	4A 4C $\bar{x} = 4.0$ $\sigma = 0.0$	
	$\ddot{h}/h_H$												
	$\ddot{h}/\dot{h}$						7.5A			6A			

DIRECTIONAL SCAS CONFIGURATION

PILOT RATINGS FOR SECONDARY MATRIX

PHASE: 1B/1C **CONTROLLER CONFIGURATION :** (2+1+1) **TASK:** BOB-UP

VERTICAL SCAS CONFIGURATION / DIRECTIONAL SCAS CONFIGURATION

	AC/RA			RA/AT			AT/AT			AT/LV			
	$\ddot{\psi}/\dot{\psi}$	$\ddot{\psi}/\psi_H$	$\dot{\psi}/\psi_H$	$\ddot{\psi}/\dot{\psi}$	$\ddot{\psi}/\psi_H$	$\dot{\psi}/\psi_H$	$\ddot{\psi}/\dot{\psi}$	$\ddot{\psi}/\psi_H$	$\dot{\psi}/\psi_H$	$\ddot{\psi}/\dot{\psi}$	$\ddot{\psi}/\psi_H$	$\dot{\psi}/\psi_H$	
$\dot{h}/h_H$													VMC
$\ddot{h}/h_H$													VMC
$\ddot{h}/\dot{h}$													VMC
$\dot{h}/h_H$				8A 7.5A $\bar{x}$ = 7.75 σ = .353	10C		7A	7C		7A	7C 6C $\bar{x}$ = 6.5 σ = .707		IMC
$\ddot{h}/h_H$									5.5 A				IMC
$\ddot{h}/\dot{h}$						10A			5.5A			5.5A	IMC

PILOT RATINGS FOR SECONDARY MATRIX

PHASE: 1B/1C

CONTROLLER CONFIGURATION : (3+1)P

TASK: BOB-UP

VERTICAL SCAS CONFIGURATION

DIRECTIONAL SCAS CONFIGURATION

VMC

	AC/RA			RA/AT			AT/AT			AT/LV		
	$\ddot{\psi}/\dot{\psi}$	$\ddot{\psi}/\psi_H$	$\dot{\psi}/\psi_H$	$\ddot{\psi}/\dot{\psi}$	$\ddot{\psi}/\psi_H$	$\dot{\psi}/\psi_H$	$\ddot{\psi}/\dot{\psi}$	$\ddot{\psi}/\psi_H$	$\dot{\psi}/\psi_H$	$\ddot{\psi}/\dot{\psi}$	$\ddot{\psi}/\psi_H$	$\dot{\psi}/\psi_H$
$\dot{h}/h_H$												
$\ddot{h}/h_H$												
$\ddot{h}/\dot{h}$												

IMC

	AC/RA			RA/AT			AT/AT			AT/LV		
	$\ddot{\psi}/\dot{\psi}$	$\ddot{\psi}/\psi_H$	$\dot{\psi}/\psi_H$	$\ddot{\psi}/\dot{\psi}$	$\ddot{\psi}/\psi_H$	$\dot{\psi}/\psi_H$	$\ddot{\psi}/\dot{\psi}$	$\ddot{\psi}/\psi_H$	$\dot{\psi}/\psi_H$	$\ddot{\psi}/\dot{\psi}$	$\ddot{\psi}/\psi_H$	$\dot{\psi}/\psi_H$
$\dot{h}/h_H$							6B 3A $\bar{x} = 4.5$ $\sigma = 2.12$	7B 5.5B 7A $\bar{x} = 6.5$ $\sigma = .866$				
$\ddot{h}/h_H$						8A			4B 4A $\bar{x} = 4.0$ $\sigma = 0.0$			
$\ddot{h}/\dot{h}$						7A		7A	5.5B 4A $\bar{x} = 4.75$ $\sigma = 1.06$			4A 4A $\bar{x} = 4.0$ $\sigma = 0.0$

PILOT RATINGS FOR SECONDARY MATRIX

PHASE: 1B/1C **CONTROLLER CONFIGURATION :** (3+1) C **TASK:** BOB-UP

VERTICAL SCAS CONFIGURATION

VMC

	AC/RA			RA/AT			AT/AT			AT/LV		
	$\ddot{\psi}/\dot{\psi}$	$\ddot{\psi}/\psi_H$	$\dot{\psi}/\psi_H$	$\ddot{\psi}/\dot{\psi}$	$\ddot{\psi}/\psi_H$	$\dot{\psi}/\psi_H$	$\ddot{\psi}/\dot{\psi}$	$\ddot{\psi}/\psi_H$	$\dot{\psi}/\psi_H$	$\ddot{\psi}/\dot{\psi}$	$\ddot{\psi}/\psi_H$	$\dot{\psi}/\psi_H$
$\dot{h}/h_H$					4A 5C $\bar{x} = 4.5$ $\sigma = .707$			4A			4A 4A 3C $\bar{x} = 3.67$ $\sigma = .577$	
$\ddot{h}/h_H$						6A						
$\ddot{h}/\dot{h}$											4C	

IMC

	AC/RA			RA/AT			AT/AT			AT/LV		
	$\ddot{\psi}/\dot{\psi}$	$\ddot{\psi}/\psi_H$	$\dot{\psi}/\psi_H$	$\ddot{\psi}/\dot{\psi}$	$\ddot{\psi}/\psi_H$	$\dot{\psi}/\psi_H$	$\ddot{\psi}/\dot{\psi}$	$\ddot{\psi}/\psi_H$	$\dot{\psi}/\psi_H$	$\ddot{\psi}/\dot{\psi}$	$\ddot{\psi}/\psi_H$	$\dot{\psi}/\psi_H$
$\dot{h}/h_H$					8A		7B 7A 6A $\bar{x} = 6.67$ $\sigma = .577$	7B 6A $\bar{x} = 6.5$ $\sigma = .707$		7B	5B	
$\ddot{h}/h_H$							6A		4.5 B 5.5 A $\bar{x} = 5.0$ $\sigma = .707$			
$\ddot{h}/\dot{h}$									8B 7A $\bar{x} = 6.5$ $\sigma = .707$			

DIRECTIONAL SCAS CONFIGURATION

PILOT RATINGS FOR SECONDARY MATRIX

PHASE: 1b/1C **CONTROLLER CONFIGURATION :** (4+0) MSI-55 **TASK:** Bob-Up

VERTICAL SCAS CONFIGURATION	AC/RA			RA/AT			AT/AT			AT/LV			
	$\ddot{\psi}/\dot{\psi}$	$\ddot{\psi}/\psi_H$	$\dot{\psi}/\psi_H$	$\ddot{\psi}/\dot{\psi}$	$\ddot{\psi}/\psi_H$	$\dot{\psi}/\psi_H$	$\ddot{\psi}/\dot{\psi}$	$\ddot{\psi}/\psi_H$	$\dot{\psi}/\psi_H$	$\ddot{\psi}/\dot{\psi}$	$\ddot{\psi}/\psi_H$	$\dot{\psi}/\psi_H$	
$\dot{h}/h_H$													
$\ddot{h}/h_H$													VMC
$\ddot{h}/\dot{h}$													
$\dot{h}/h_H$													
$\ddot{h}/h_H$													IMC
$\ddot{h}/\dot{h}$													

DIRECTIONAL SCAS CONFIGURATION

PILOT RATINGS FOR SECONDARY MATRIX

PHASE: 1B/1C **CONTROLLER CONFIGURATION :** (4+0) MS1-S02 **TASK:** BOB-UP

VERTICAL SCAS CONFIGURATION

VMC

	AC/RA			RA/AT			AT/AT			AT/LV		
	$\ddot{\psi}/\dot{\psi}$	$\ddot{\psi}/\psi_H$	$\dot{\psi}/\psi_H$	$\ddot{\psi}/\dot{\psi}$	$\ddot{\psi}/\psi_H$	$\dot{\psi}/\psi_H$	$\ddot{\psi}/\dot{\psi}$	$\ddot{\psi}/\psi_H$	$\dot{\psi}/\psi_H$	$\ddot{\psi}/\dot{\psi}$	$\ddot{\psi}/\psi_H$	$\dot{\psi}/\psi_H$
$\dot{h}/h_H$					6.5A			6A			5A 6B $\bar{x} = 5.5$ $\sigma = .707$	
$\ddot{h}/h_H$									6D 6D $\bar{x} = 6.0$ $\sigma = 0.0$			6A
$\ddot{h}/\dot{h}$												

IMC

	AC/RA			RA/AT			AT/AT			AT/LV		
	$\ddot{\psi}/\dot{\psi}$	$\ddot{\psi}/\psi_H$	$\dot{\psi}/\psi_H$	$\ddot{\psi}/\dot{\psi}$	$\ddot{\psi}/\psi_H$	$\dot{\psi}/\psi_H$	$\ddot{\psi}/\dot{\psi}$	$\ddot{\psi}/\psi_H$	$\dot{\psi}/\psi_H$	$\ddot{\psi}/\dot{\psi}$	$\ddot{\psi}/\psi_H$	$\dot{\psi}/\psi_H$
$\dot{h}/h_H$								8A 6A 8A $\bar{x} = 7.33$ $\sigma = 1.15$			6C	
$\ddot{h}/h_H$												6A 4.5A $\bar{x} = 5.25$ $\sigma = 1.06$
$\ddot{h}/\dot{h}$						9A			5.5A			5A

DIRECTIONAL SCAS CONFIGURATION

PILOT RATINGS FOR SECONDARY MATRIX

PHASE: 1B / 1C **CONTROLLER CONFIGURATION :** (2 + 1 + 1) **TASK:** NOE

	VERTICAL SCAS CONFIGURATION	AC/RA			RA/AT			AT/AT			AT/LV		
		$\ddot{\psi}/\dot{\psi}$	$\ddot{\psi}/\psi_H$	$\dot{\psi}/\psi_H$	$\ddot{\psi}/\dot{\psi}$	$\ddot{\psi}/\psi_H$	$\dot{\psi}/\psi_H$	$\ddot{\psi}/\dot{\psi}$	$\ddot{\psi}/\psi_H$	$\dot{\psi}/\psi_H$	$\ddot{\psi}/\dot{\psi}$	$\ddot{\psi}/\psi_H$	$\dot{\psi}/\psi_H$
VMC	$\dot{h}/h_H$	6A 6A $\bar{x}$= 6.0 σ= 0.0	6A 5C $\bar{x}$ = 5.5 σ = .707		5.5A 3C $\bar{x}$= 4.25 σ = 1.77	5.5A 4C $\bar{x}$ = 4.75 σ = 1.06		4.5A 3C $\bar{x}$= 3.75 σ = 1.06	5A 4.5C $\bar{x}$= 4.75 σ= .353		4.5A 2.5A $\bar{x}$=3.5 σ= 1.41		
	$\ddot{h}/h_H$		4C	5.5A 5C $\bar{x}$= 5.25 σ= .353						4A 6C $\bar{x}$= 5.0 σ = 1.41			
	$\ddot{h}/\dot{h}$			5.5A 6A $\bar{x}$ = 5.75 σ = .353	6A		7A 5.5A 7A 5.5A 5.5A 5A $\bar{x}$ = 5.12 σ = .861	5.5A		6A 5A $\bar{x}$ = 5.5 σ = .707	6A 5A $\bar{x}$= 5.5 σ= .707		4.5A 5.5A $\bar{x}$ = 5.0 σ= .707
IMC	$\dot{h}/h_H$				6A	10C		5.5A			5.5A	7C	
	$\ddot{h}/h_H$									8A			9C 6C $\bar{x}$= 7.5 σ= 2.12
	$\ddot{h}/\dot{h}$						7A			7.5A 6A $\bar{x}$ = 6.75 σ = 1.06	6A 5A $\bar{x}$= 5.5 σ= .707		4.5A 6A 5.5A 6A 7.5A $\bar{x}$= 5.9 σ= 1.08

DIRECTIONAL SCAS CONFIGURATION

PILOT RATINGS FOR SECONDARY MATRIX

PHASE: 1B/1C CONTROLLER CONFIGURATION : (3+1)P TASK: NOE

VMC

VERTICAL SCAS CONFIGURATION	AC/RA			RA/AT			AT/AT			AT/LV		
	$\ddot\psi/\dot\psi$	$\ddot\psi/\psi_H$	$\dot\psi/\psi_H$	$\ddot\psi/\dot\psi$	$\ddot\psi/\psi_H$	$\dot\psi/\psi_H$	$\ddot\psi/\dot\psi$	$\ddot\psi/\psi_H$	$\dot\psi/\psi_H$	$\ddot\psi/\dot\psi$	$\ddot\psi/\psi_H$	$\dot\psi/\psi_H$
$\dot h/h_H$	7A 5.5C $\bar x = 6.25$ $\sigma = 1.06$	4C		6A 4.5C $\bar x = 5.25$ $\sigma = 1.06$	5C		3A 4C 5A 5A $\bar x = 4.25$ $\sigma = .957$	4.5A 3C $\bar x = 3.75$ $\sigma = 1.06$		3C	2.5C	
$\ddot h/h_H$			7A 6C $\bar x = 6.5$ $\sigma = .707$			5A 7.5C 5A $\bar x = 5.83$ $\sigma = 1.44$			4.5A 5.5C $\bar x = 5.0$ $\sigma = .707$			6C
$\ddot h/\dot h$			7A 7A 7.5C $\bar x = 7.17$ $\sigma = .289$			6A 5A 5.5A 6C 7B 5A $\bar x = 5.75$ $\sigma = .758$			4.5A 7B 5C $\bar x = 5.5$ $\sigma = 1.32$			5A 4.5C 6B 7C $\bar x = 5.62$ $\sigma = 1.11$

IMC

VERTICAL SCAS CONFIGURATION	AC/RA			RA/AT			AT/AT			AT/LV		
	$\ddot\psi/\dot\psi$	$\ddot\psi/\psi_H$	$\dot\psi/\psi_H$	$\ddot\psi/\dot\psi$	$\ddot\psi/\psi_H$	$\dot\psi/\psi_H$	$\ddot\psi/\dot\psi$	$\ddot\psi/\psi_H$	$\dot\psi/\psi_H$	$\ddot\psi/\dot\psi$	$\ddot\psi/\psi_H$	$\dot\psi/\psi_H$
$\dot h/h_H$				7.5A	9A		7A 7A $\bar x = 7.0$ $\sigma = 0.0$	10A 8.5A $\bar x = 9.25$ $\sigma = 1.06$			8C	
$\ddot h/h_H$									6A 8A 7A $\bar x = 7.0$ $\sigma = 1.0$			5.5C
$\ddot h/\dot h$									6A 7A $\bar x = 6.5$ $\sigma = .707$			8A

DIRECTIONAL SCAS CONFIGURATION

PILOT RATINGS FOR SECONDARY MATRIX

PHASE: 1B/1C **CONTROLLER CONFIGURATION :** (3+1)C **TASK:** NOE

VERTICAL SCAS CONFIGURATION

		AC/RA			RA/AT			AT/AT			AT/LV		
		$\ddot{\psi}/\dot{\psi}$	$\ddot{\psi}/\psi_H$	$\dot{\psi}/\psi_H$	$\ddot{\psi}/\dot{\psi}$	$\ddot{\psi}/\psi_H$	$\dot{\psi}/\psi_H$	$\ddot{\psi}/\dot{\psi}$	$\ddot{\psi}/\psi_H$	$\dot{\psi}/\psi_H$	$\ddot{\psi}/\dot{\psi}$	$\ddot{\psi}/\psi_H$	$\dot{\psi}/\psi_H$
VMC	$\dot{h}/h_H$	7A			5.5A	4.5A 4B 3C 5.5A 5B 5.5A $\bar{x} = 4.58$ $\sigma = .970$		5A	6A 4.5A 5A $\bar{x} = 5.17$ $\sigma = .764$		5A	4A 5A 4A 3C $\bar{x} = 4.0$ $\sigma = .816$	
	$\ddot{h}/h_H$					6A	6A 5.5A $\bar{x} = 5.75$ $\sigma = .353$			5A 5B 5A $\bar{x} = 5.0$ $\sigma = 0.0$			
	$\ddot{h}/\dot{h}$								6A	5.5A 7A 6A 5.5A 5.5A 6A $\bar{x} = 5.91$ $\sigma = .584$		5C 6A $\bar{x} = 5.5$ $\sigma = .707$	
IMC	$\dot{h}/h_H$				7A 6A $\bar{x} = 6.5$ $\sigma = .707$	7A 5.5A $\bar{x} = 6.25$ $\sigma = 1.06$		8B 5A 7A 6A $\bar{x} = 6.5$ $\sigma = 1.29$	7A 5.5A $\bar{x} = 6.25$ $\sigma = 1.06$			6A	
	$\ddot{h}/h_H$						7.5A			7A			
	$\ddot{h}/\dot{h}$						8A			8A			

DIRECTIONAL SCAS CONFIGURATION

PILOT RATINGS FOR SECONDARY MATRIX

PHASE: 1B/1C **CONTROLLER CONFIGURATION :** (4+0) **MSI-SS** **TASK:** NOE

VERTICAL SCAS CONFIGURATION		AC/RA			RA/AT			AT/AT			AT/LV		
		$\ddot{\psi}/\dot{\psi}$	$\ddot{\psi}/\psi_H$	$\dot{\psi}/\psi_H$	$\ddot{\psi}/\dot{\psi}$	$\ddot{\psi}/\psi_H$	$\dot{\psi}/\psi_H$	$\ddot{\psi}/\dot{\psi}$	$\ddot{\psi}/\psi_H$	$\dot{\psi}/\psi_H$	$\ddot{\psi}/\dot{\psi}$	$\ddot{\psi}/\psi_H$	$\dot{\psi}/\psi_H$
VMC	$\dot{h}/h_H$				5A 5A $\bar{x} = 5.0$ $\sigma = 0.0$			6A			5A		
	$\ddot{h}/h_H$						3C						
	$\ddot{h}/\dot{h}$				7A 7A 8A $\bar{x} = 7.33$ $\sigma = .577$								
IMC	$\dot{h}/h_H$												
	$\ddot{h}/h_H$												
	$\ddot{h}/\dot{h}$												

DIRECTIONAL SCAS CONFIGURATION

PILOT RATINGS FOR SECONDARY MATRIX

PHASE: 1B/1C **CONTROLLER CONFIGURATION :** (4+0) MSI-SD2 **TASK:** NOE

VERTICAL SCAS CONFIGURATION

DIRECTIONAL SCAS CONFIGURATION

VMC

	AC/RA			RA/AT			AT/AT			AT/LV		
	$\ddot\psi/\dot\psi$	$\ddot\psi/\psi_H$	$\dot\psi/\psi_H$	$\ddot\psi/\dot\psi$	$\ddot\psi/\psi_H$	$\dot\psi/\psi_H$	$\ddot\psi/\dot\psi$	$\ddot\psi/\psi_H$	$\dot\psi/\psi_H$	$\ddot\psi/\dot\psi$	$\ddot\psi/\psi_H$	$\dot\psi/\psi_H$
$\dot h/h_H$					7A			6A			5A 5B $\bar x = 5.0$ $\sigma = 0.0$	
$\ddot h/h_H$						5C			7D 7D 5C $\bar x = 6.33$ $\sigma = 1.15$			7A
$\ddot h/\dot h$												

IMC

	AC/RA			RA/AT			AT/AT			AT/LV		
	$\ddot\psi/\dot\psi$	$\ddot\psi/\psi_H$	$\dot\psi/\psi_H$	$\ddot\psi/\dot\psi$	$\ddot\psi/\psi_H$	$\dot\psi/\psi_H$	$\ddot\psi/\dot\psi$	$\ddot\psi/\psi_H$	$\dot\psi/\psi_H$	$\ddot\psi/\dot\psi$	$\ddot\psi/\psi_H$	$\dot\psi/\psi_H$
$\dot h/h_H$					7A			8A 7A 7A $\bar x = 7.33$ $\sigma = .577$			6C	
$\ddot h/h_H$						9A			8A			6A 5.5A $\bar x = 5.75$ $\sigma = .353$
$\ddot h/\dot h$						8.5A			6A			5.5A

PILOT RATINGS FOR SECONDARY MATRIX

PHASE: 1B/1C　**CONTROLLER CONFIGURATION :** (2+1+1)　**TASK:** ACCEL /DECEL

VERTICAL SCAS CONFIGURATION / DIRECTIONAL SCAS CONFIGURATION

VMC

	AC/RA			RA/AT			AT/AT			AT/LV		
	$\ddot{\psi}/\dot{\psi}$	$\ddot{\psi}/\psi_H$	$\dot{\psi}/\psi_H$	$\ddot{\psi}/\dot{\psi}$	$\ddot{\psi}/\psi_H$	$\dot{\psi}/\psi_H$	$\ddot{\psi}/\dot{\psi}$	$\ddot{\psi}/\psi_H$	$\dot{\psi}/\psi_H$	$\ddot{\psi}/\dot{\psi}$	$\ddot{\psi}/\psi_H$	$\dot{\psi}/\psi_H$
$\dot{h}/h_H$	5.5A	5.5A		3C 5A $\bar{x}=4.0$ $\sigma=1.41$	2.5C		4C 4.5A $\bar{x}=4.25$ $\sigma=.353$	4C 2C $\bar{x}=3.0$ $\sigma=1.41$		4C 5A $\bar{x}=4.5$ $\sigma=.707$	3C	
$\ddot{h}/h_H$			4.5A	2C	4C		2C			3C		
$\ddot{h}/\dot{h}$			5A		7C 8C $\bar{x}=7.5$ $\sigma=.707$	6A 10C 5A 5.5A $\bar{x}=6.62$ $\sigma=2.29$		5C	5A			4.5A

IMC

	AC/RA			RA/AT			AT/AT			AT/LV		
	$\ddot{\psi}/\dot{\psi}$	$\ddot{\psi}/\psi_H$	$\dot{\psi}/\psi_H$	$\ddot{\psi}/\dot{\psi}$	$\ddot{\psi}/\psi_H$	$\dot{\psi}/\psi_H$	$\ddot{\psi}/\dot{\psi}$	$\ddot{\psi}/\psi_H$	$\dot{\psi}/\psi_H$	$\ddot{\psi}/\dot{\psi}$	$\ddot{\psi}/\psi_H$	$\dot{\psi}/\psi_H$
$\dot{h}/h_H$	7A			7A 6A $\bar{x}=6.5$ $\sigma=.707$	6A 8A $\bar{x}=7.0$ $\sigma=1.41$		6A 7.5A $\bar{x}=6.75$ $\sigma=1.06$	7A 7.5A $\bar{x}=7.25$ $\sigma=.353$		5.5A		
$\ddot{h}/h_H$												
$\ddot{h}/\dot{h}$					7A		7A	7A		6A		5.5A

PILOT RATINGS FOR SECONDARY MATRIX

PHASE: 1B/1C **CONTROLLER CONFIGURATION :** (3+1)P **TASK:** ACCEL/DECEL

VERTICAL SCAS CONFIGURATION

VMC

	AC/RA			RA/AT			AT/AT			AT/LV		
	$\ddot{\psi}/\dot{\psi}$	$\ddot{\psi}/\psi_H$	$\dot{\psi}/\psi_H$	$\ddot{\psi}/\dot{\psi}$	$\ddot{\psi}/\psi_H$	$\dot{\psi}/\psi_H$	$\ddot{\psi}/\dot{\psi}$	$\ddot{\psi}/\psi_H$	$\dot{\psi}/\psi_H$	$\ddot{\psi}/\dot{\psi}$	$\ddot{\psi}/\psi_H$	$\dot{\psi}/\psi_H$
$\dot{h}/h_H$				5.5A	5.5A		4.5A	7A 5.5A 5A $\bar{x} = 5.83$ $\sigma = 1.04$				
$\ddot{h}/h_H$						5A 4B $\bar{x} = 4.5$ $\sigma = .707$			5.5A 3B $\bar{x} = 4.25$ $\sigma = 1.77$			
$\ddot{h}/\dot{h}$			6A		7A	6A		7A	5.5A 7B $\bar{x} = 6.25$ $\sigma = 1.06$		7A	5A 7B $\bar{x} = 6.0$ $\sigma = 1.41$

IMC

	AC/RA			RA/AT			AT/AT			AT/LV		
	$\ddot{\psi}/\dot{\psi}$	$\ddot{\psi}/\psi_H$	$\dot{\psi}/\psi_H$	$\ddot{\psi}/\dot{\psi}$	$\ddot{\psi}/\psi_H$	$\dot{\psi}/\psi_H$	$\ddot{\psi}/\dot{\psi}$	$\ddot{\psi}/\psi_H$	$\dot{\psi}/\psi_H$	$\ddot{\psi}/\dot{\psi}$	$\ddot{\psi}/\psi_H$	$\dot{\psi}/\psi_H$
$\dot{h}/h_H$								8A			8A 7.5A 7A $\bar{x} = 7.5$ $\sigma = .5$	
$\ddot{h}/h_H$						8A			7A 6A $\bar{x} = 6.5$ $\sigma = .707$			
$\ddot{h}/\dot{h}$						7A 8A $\bar{x} = 7.5$ $\sigma = .707$			5.5A 7A $\bar{x} = 6.25$ $\sigma = 1.06$			7A

DIRECTIONAL SCAS CONFIGURATION

PILOT RATINGS FOR SECONDARY MATRIX

PHASE: 1B/1C **CONTROLLER CONFIGURATION :** (3+1)C **TASK:** ACCEL/DECEL

VERTICAL SCAS CONFIGURATION (rows) / DIRECTIONAL SCAS CONFIGURATION (columns)

VMC

	AC/RA			RA/AT			AT/AT			AT/LV		
	$\ddot{\psi}/\dot{\psi}$	$\ddot{\psi}/\psi_H$	$\dot{\psi}/\psi_H$	$\ddot{\psi}/\dot{\psi}$	$\ddot{\psi}/\psi_H$	$\dot{\psi}/\psi_H$	$\ddot{\psi}/\dot{\psi}$	$\ddot{\psi}/\psi_H$	$\dot{\psi}/\psi_H$	$\ddot{\psi}/\dot{\psi}$	$\ddot{\psi}/\psi_H$	$\dot{\psi}/\psi_H$
$\dot{h}/h_H$	6A			4B 5A $\bar{x} = 4.5$ $\sigma = .707$	3B 5A $\bar{x} = 4.0$ $\sigma = 1.41$					4.5A	4A	
$\ddot{h}/h_H$												
$\ddot{h}/\dot{h}$												

IMC

	AC/RA			RA/AT			AT/AT			AT/LV		
	$\ddot{\psi}/\dot{\psi}$	$\ddot{\psi}/\psi_H$	$\dot{\psi}/\psi_H$	$\ddot{\psi}/\dot{\psi}$	$\ddot{\psi}/\psi_H$	$\dot{\psi}/\psi_H$	$\ddot{\psi}/\dot{\psi}$	$\ddot{\psi}/\psi_H$	$\dot{\psi}/\psi_H$	$\ddot{\psi}/\dot{\psi}$	$\ddot{\psi}/\psi_H$	$\dot{\psi}/\psi_H$
$\dot{h}/h_H$				6A 6A $\bar{x} = 6.0$ $\sigma = 0.0$	6A 6A $\bar{x} = 6.0$ $\sigma = 0.0$		5A	4C 5.5A 5.5A $\bar{x} = 5.0$ $\sigma = .866$			5C	
$\ddot{h}/h_H$						5A			5A			
$\ddot{h}/\dot{h}$						8A			8A			

PILOT RATINGS FOR SECONDARY MATRIX

PHASE: 1B/1C **CONTROLLER CONFIGURATION :** (4+0) **MSJ-SS** **TASK:** ACCEL/DECEL

		AC/RA			RA/AT			AT/AT			AT/LV		
		$\ddot{\psi}/\dot{\psi}$	$\ddot{\psi}/\psi_H$	$\dot{\psi}/\psi_H$	$\ddot{\psi}/\dot{\psi}$	$\ddot{\psi}/\psi_H$	$\dot{\psi}/\psi_H$	$\ddot{\psi}/\dot{\psi}$	$\ddot{\psi}/\psi_H$	$\dot{\psi}/\psi_H$	$\ddot{\psi}/\dot{\psi}$	$\ddot{\psi}/\psi_H$	$\dot{\psi}/\psi_H$
VMC	$\dot{h}/h_H$	6A			5.5A 5.5A $\bar{x}$= 5.5 σ= 0.0	7A 4.5A 4.5A $\bar{x}$ = 5.33 σ = 1.44		4.5 A 5 A 5.5A $\bar{x}$ = σ =	7A 4.5A 7A 4.5A $\bar{x}$ = 5.75 σ = 1.44		4.5 A 7 A $\bar{x}$= 5.75 σ= 1.77	5B 4.5A $\bar{x}$ = 4.75 σ = .353	
	$\ddot{h}/h_H$												
	$\ddot{h}/\dot{h}$	6A 7A $\bar{x}$ = 6.5 σ = .707			6A 7A $\bar{x}$= 6.5 σ = .707			6A					
IMC	$\dot{h}/h_H$												
	$\ddot{h}/h_H$												
	$\ddot{h}/\dot{h}$												

VERTICAL SCAS CONFIGURATION

DIRECTIONAL SCAS CONFIGURATION

PILOT RATINGS FOR SECONDARY MATRIX

PHASE: 1B/1C　　**CONTROLLER CONFIGURATION :** (4+0) **MSI-SD2**　　**TASK:** ACCEL/DECEL

VERTICAL SCAS CONFIGURATION

VMC

	AC/RA			RA/AT			AT/AT			AT/LV		
	$\ddot{\psi}/\dot{\psi}$	$\ddot{\psi}/\psi_H$	$\dot{\psi}/\psi_H$	$\ddot{\psi}/\dot{\psi}$	$\ddot{\psi}/\psi_H$	$\dot{\psi}/\psi_H$	$\ddot{\psi}/\dot{\psi}$	$\ddot{\psi}/\psi_H$	$\dot{\psi}/\psi_H$	$\ddot{\psi}/\dot{\psi}$	$\ddot{\psi}/\psi_H$	$\dot{\psi}/\psi_H$
$\dot{h}/h_H$				5.5 A	5A 3C 4.5A 3B $\bar{x} = 3.87$ $\sigma = 1.03$			3B 4C $\bar{x} = 3.5$ $\sigma = .707$			2.5 B 5 A 4C $\bar{x} = 3.83$ $\sigma = 1.25$	
$\ddot{h}/h_H$												
$\ddot{h}/\dot{h}$												

IMC

	AC/RA			RA/AT			AT/AT			AT/LV		
	$\ddot{\psi}/\dot{\psi}$	$\ddot{\psi}/\psi_H$	$\dot{\psi}/\psi_H$	$\ddot{\psi}/\dot{\psi}$	$\ddot{\psi}/\psi_H$	$\dot{\psi}/\psi_H$	$\ddot{\psi}/\dot{\psi}$	$\ddot{\psi}/\psi_H$	$\dot{\psi}/\psi_H$	$\ddot{\psi}/\dot{\psi}$	$\ddot{\psi}/\psi_H$	$\dot{\psi}/\psi_H$
$\dot{h}/h_H$				5.5C	6A 7C 4C $\bar{x} = 5.67$ $\sigma = 1.53$			4.5 A 3 C 2.5C $\bar{x} = 3.33$ $\sigma = 1.04$		4.5A 7A $\bar{x} = 5.75$ $\sigma = 1.77$	5.5A 4C $\bar{x} = 4.75$ $\sigma = 1.06$	
$\ddot{h}/h_H$												
$\ddot{h}/\dot{h}$									6A			

DIRECTIONAL SCAS CONFIGURATION

PHASE 2A PRIMARY MATRICIES

PHASE 2A PRIMARY MATRIX FOR BOB-UP TASK (OLD SHAPING)
VMC

CMD/STAB CONFIG.	AC/RA				RA/AT				AT/AT				AT/LV			
	PILOT	AVERAGE	RANGE	NO. POINTS	PILOT	AVERAGE	RANGE	NO. POINTS	PILOT	AVERAGE	RANGE	NO. POINTS	PILOT	AVERAGE	RANGE	NO. POINTS
(4+0) MSI-SD2	A				A	5	4.5-6	7	A				A	4.96	4-5	6
	B				B	5.12	4.5-6	4	B				B	4.16	4-4.5	3
	C				C				C				C			
	D				D				D				D			
	$\bar{x}$ · σ ·				$\bar{x}$ · 5.04 σ · 0.522				$\bar{x}$ · σ ·				$\bar{x}$ · 4.67 σ · 0.433			
(4+0) MSI-SD3	A				A	5	4.5-5.5	3	A				A	3.5	3-4	2
	B				B				B				B	4.5	4-5	2
	C				C				C				C			
	D				D				D				D			
	$\bar{x}$ · σ ·				$\bar{x}$ · 5.0 σ · 0.5				$\bar{x}$ · σ ·				$\bar{x}$ · 4 σ · 0.816			
(3+1)C MSI-SD3, MSI-SD2	A	6		1	A	3.5	3-4	2	A	4		1	A	4	3-4.5	4
	B				B				B				B	4		1
	C				C				C				C			
	D				D				D				D			
	$\bar{x}$ · 6.0				$\bar{x}$ · 3.5 σ · 0.707				$\bar{x}$ · 4.0 σ ·				$\bar{x}$ · 4.0 σ · 0.612			

PHASE 2A PRIMARY MATRIX FOR PRECISION HOVER TASK (OLD SHAPING)
VMC

CONFIG. / CMD/STAB	PILOT	AC/RA			RA/AT			AT/AT			AT/LV		
		AVERAGE	RANGE	NO. POINTS	AVERAGE	RANGE	NO. POINTS	AVERAGE	RANGE	NO. POINTS	AVERAGE	RANGE	NO. POINTS
(4+0) MSI-SD2	A				5.28	4.5-6	8				4.58	4-5.5	6
	B				5.12	4-7	4				4.5	3-5.5	3
	C												
	D												
		$\bar{x}$ =	σ =		$\bar{x}$ = 5.23	σ = 0.793		$\bar{x}$ =	σ =		$\bar{x}$ = 4.55	σ = 0.81	
(4+0) MSI-SD3	A				6.33	5-8	3				4	4-4	2
	B										4.5	4.5-4.5	2
	C												
	D												
		$\bar{x}$ =	σ =		$\bar{x}$ = 6.33	σ = 1.53		$\bar{x}$ =	σ =		$\bar{x}$ = 4.25	σ = 0.289	
(3+1)C MSI-SD3, MSI-SD2	A	6		1	4.25	4-4.5	2	3		1	2.5	2-3	4
	B										4		1
	C												
	D												
		$\bar{x}$ = 6.0			$\bar{x}$ = 4.25	σ = 0.353		$\bar{x}$ = 3.0			$\bar{x}$ = 2.8	σ = 0.758	

ORIGINAL PAGE IS
OF POOR QUALITY

PHASE 2A PRIMARY MATRIX FOR NOE TASK (OLD SHAPING)
VMC

CMD/STAB / CONFIG.		AC/RA			RA/AT			AT/AT			AT/LV		
	PILOT	AVERAGE	RANGE	NO. POINTS	AVERAGE	RANGE	NO. POINTS	AVERAGE	RANGE	NO. POINTS	AVERAGE	RANGE	NO. POINTS
(4+0) MSI-SD2	A				4.68	4-5.5	8				4.46	4-5	6
	B				4.75	4-5	4				3.67	3-4	3
	C												
	D												
		$\bar{x}$ =	σ =		$\bar{x}$ = 4.71	σ = 0.5		$\bar{x}$ =	σ =		$\bar{x}$ = 4.19	σ = 0.583	
(4+0) MSI-SD3	A				5	4.5-5.5	3				3.75	3-4.5	2
	B										6	5-6	2
	C												
	D												
		$\bar{x}$ =	σ =		$\bar{x}$ = 5.0	σ = 0.5		$\bar{x}$ =	σ =		$\bar{x}$ = 4.87	σ = 1.65	
(3+1)C MSI-SD3, MSI-SD2	A	6		1	4.75	4-5.5	2	4		1	2.75	2.5-3	4
	B										7		1
	C												
	D												
		$\bar{x}$ = 6.0			$\bar{x}$ = 4.75	σ = 1.06		$\bar{x}$ = 4.0			$\bar{x}$ = 3.6	σ = 1.91	

PHASE 2A PRIMARY MATRIX FOR NOE TASK
VMC

CMD/STAB / CONFIG.	AC/RA				RA/AT				AT/AT				AT/LV			
	PILOT	AVERAGE	RANGE	NO. POINTS	PILOT	AVERAGE	RANGE	NO. POINTS	PILOT	AVERAGE	RANGE	NO. POINTS	PILOT	AVERAGE	RANGE	NO. POINTS
(4+0) MSI-SS	A	6		1	A	5.5		1	A	4.5		1	A	4.5	4-5	2
	B	6.5		1	B	4.75	4.5-5	2	B	4		1	B	3.75	3-4.5	2
	C				C				C				C			
	D				D				D				D			
		$\bar{x}$ = 6.25 σ = 0.25				$\bar{x}$ = 5 σ = 0.41				$\bar{x}$ = 4.25 σ = 1.0				$\bar{x}$ = 4.0 σ = 0.76		
(4+0) MSI-SD2	A				A	5		1	A	4.5		1	A	3.5	3-4	2
	B				B	6		1	B				B	4	4-4	4
	C				C				C				C			
	D				D				D				D			
		$\bar{x}$ = σ =				$\bar{x}$ = 5.5 σ = 0.5				$\bar{x}$ = 4.5 σ =				$\bar{x}$ = 3.83 σ = 0.37		
(4+0) MSI-SD3	A	4.5		1	A	4.12	4-4	2	A	3		1	A	2.75	2.5-3	3
	B	5.5		1	B	3.66	3-4	3	B	4		1	B	2.83	2.5-3	3
	C	7		1	C	4		1	C	3		1	C	3.16	2.5-4	3
	D	7		1	D	4		1	D	4		1	D	3.66	3-4	3
		$\bar{x}$ = 6.0 σ = 1.1				$\bar{x}$ = 3.85 σ = 0.40				$\bar{x}$ = 3.5 σ = 0.5				$\bar{x}$ = 3.1 σ = 0.55		

ORIGINAL PAGE IS
OF POOR QUALITY

PHASE 2A PRIMARY MATRIX FOR NOE TASK
VMC

CMD/STAB / CONFIG.	AC/RA				RA/AT				AT/AT				AT/LV			
	PILOT	AVERAGE	RANGE	NO. POINTS	PILOT	AVERAGE	RANGE	NO. POINTS	PILOT	AVERAGE	RANGE	NO. POINTS	PILOT	AVERAGE	RANGE	NO. POINTS
(3+1)C MSI-SD3, MSI-SD1	A	5		1	A	4.5		1	A	2.75	2.5-3	2	A	2.5		1
	B				B	3.75	3-4.5	2	B				B	4.25	4-4.5	2
	C				C				C				C			
	D				D				D				D			
	$\bar{x}$ = 5 σ =				$\bar{x}$ = 40 σ = 0.866				$\bar{x}$ = 2.75 σ = 0.35				$\bar{x}$ = 3.67 σ = 0.85			
(3+1)C MSI-SD3, MSI-SD2	A	6	5-7	2	A	4		1	A	2.5		1	A	3.12	2-4	2
	B	5	5-5	2	B	4		1	B	3		1	B	2.5	2.5-2.5	2
	C	5.5		1	C	4		1	C	4		1	C	3.67	3-4	3
	D				D	4		1	D	4		1	D	3		1
	$\bar{x}$ = 5.5 σ = 0.77				$\bar{x}$ = 4 σ = 0				$\bar{x}$ = 3.37 σ = 0.65				$\bar{x}$ = 3.125 σ = 0.79			
(2+1+1) MSI-SD3, MSI-SD2	A	6		1	A	5		1	A	4		1	A	2.75	2.5-3	2
	B				B				B				B	3		1
	C				C				C				C			
	D				D	6		1	D	3		1	D			
	$\bar{x}$ = 6 σ =				$\bar{x}$ = 5.5 σ = 0.5				$\bar{x}$ = 3.5 σ = 0.5				$\bar{x}$ = 2.83 σ = 0.24			

PHASE 2A PRIMARY MATRIX FOR BOB-UP TASK
VMC

CMD/STAB / CONFIG.	AC/RA				RA/AT				AT/AT				AT/LV			
	PILOT	AVERAGE	RANGE	NO. POINTS	PILOT	AVERAGE	RANGE	NO. POINTS	PILOT	AVERAGE	RANGE	NO. POINTS	PILOT	AVERAGE	RANGE	NO. POINTS
(4+0) MSI-SS	A	6			A	5.5		1	A	4.5		1	A	4.37	4-4.5	2
	B	6.5			B	3.5	3-4	2	B	3		1	B	3.67	3-4	3
	C				C				C				C			
	D				D				D				D			
	$\bar{x}$ - 6.25 σ - 0.25				$\bar{x}$ - 4.16 σ - 1.25				$\bar{x}$ - 3.75 σ - 0.75				$\bar{x}$ - 3.95 σ - 0.51			
(4+0) MSI-SD2	A				A	5		1	A	4.5		1	A	4.25	4-4.5	2
	B				B	6		1	B				B	3.5	3-4	4
	C				C				C				C			
	D				D				D				D			
	$\bar{x}$ - σ -				$\bar{x}$ - 5.5 σ - 0.707				$\bar{x}$ - 4.5 σ -				$\bar{x}$ - 3.75 σ - 0.56			
(4+0) MSI-SD3	A	5		1	A	4.25	4-4.5	2	A	3		1	A	2.83	2.5-3	3
	B	5.5		1	B	3.67	3-4	3	B	3		1	B	2.83	2.5-3	3
	C	6		1	C	4.5	3-6	2	C	3		1	C	3.18	2.5-4	3
	D	7		1	D	6		1	D	3		1	D	3	3-3	2
	$\bar{x}$ - 5.9 σ - 0.74				$\bar{x}$ - 4.2 σ - 1.2				$\bar{x}$ - 3 σ - 0				$\bar{x}$ - 2.95 σ - 0.4			

PHASE 2A PRIMARY MATRIX FOR BOB-UP TASK

VMC

CMD/STAB / CONFIG.	PILOT	AC/RA AVERAGE	AC/RA RANGE	AC/RA NO. POINTS	RA/AT AVERAGE	RA/AT RANGE	RA/AT NO. POINTS	AT/AT AVERAGE	AT/AT RANGE	AT/AT NO. POINTS	AT/LV AVERAGE	AT/LV RANGE	AT/LV NO. POINTS
(3+1)C MSI-SD3, MSI-SD1	A	5.25		1	4.75		1	3	3-3	2	2.5		1
	B				4.5		1				3.75	3.5-4	2
	C												
	D												
		$\bar{x}$ = 5.25 σ =			$\bar{x}$ = 4.62 σ = 0.12			$\bar{x}$ = 3 σ = 0			$\bar{x}$ = 3.33 σ = 0.62		
(3+1)C MSI-SD3, MSI-SD2	A	5.5	5-6	2	4.25		1	2.5		1	2.75	2.5-3	2
	B	4.5	4.5-4.5	2	3		1	2.5		1	2.5	2.5-2.5	2
	C	5.5		1	4		1	3		1	4.33	4-5	3
	D				4		1	3		1	3		1
		$\bar{x}$ = 5.1 σ = 0.58			$\bar{x}$ = 3.81 σ = 0.55			$\bar{x}$ = 2.75 σ = 0.25			$\bar{x}$ = 3.3 σ = .92		
(2+1+1) MSI-SD3, MSI-SD2	A	6		1	3		1	2.5		1	2.87	2.5-3	2
	B										2.5		1
	C												
	D				6		1	3		1			
		$\bar{x}$ = 6.0 σ =			$\bar{x}$ = 4.5 σ = 1.5			$\bar{x}$ = 2.75 σ = 0.25			$\bar{x}$ = 2.75 σ = 0.2		

ORIGINAL PAGE IS
OF POOR QUALITY

PHASE 2A PRIMARY MATRIX FOR PRECISION HOVER TASK

VMC

CONFIG. \ CMD/STAB		AC/RA			RA/AT			AT/AT			AT/LV		
	PILOT	AVERAGE	RANGE	NO. POINTS	AVERAGE	RANGE	NO. POINTS	AVERAGE	RANGE	NO. POINTS	AVERAGE	RANGE	NO. POINTS
(4+0) MSI-SS	A	6		1	5.5		1	5		1	4.62	4.5-5	4
	B	7		1	4.5	4.5-4.5	2	3		1	3.9	3-4.5	5
	C												
	D												
		x̄ = 6.5	σ = 0.707		x̄ = 4.8	σ = 0.47		x̄ = 4	σ = 1.0		x̄ = 4.2	σ = 0.56	
(4+0) MSI-SD2	A				5.5		1	4		1	4	4-4	2
	B				6		1				4	3.5-4.5	4
	C												
	D												
		x̄ =	σ =		x̄ = 5.75	σ = 0.25		x̄ = 4			x̄ = 4	σ = 0.41	
(4+0) MSI-SD3	A	5		1	4.12	4-4	2	3		1	2.75	2.5-3	3
	B	6		1	3.67	3-4	3	3		1	2.83	2.5-3	3
	C	8		1	6	5-7	2	4		1	3.17	2.5-4	3
	D				4		1	3		1	3	3-3	2
		x̄ = 6.3	σ = 1.5		x̄ = 4.5	σ = 1.1		x̄ = 3.25	σ = 0.43		x̄ = 3	σ = 0.35	

PHASE 2A PRIMARY MATRIX FOR PRECISION HOVER TASK
VMC

CMD/STAB / CONFIG.	AC/RA				RA/AT				AT/AT				AT/LV			
	PILOT	AVERAGE	RANGE	NO. POINTS	PILOT	AVERAGE	RANGE	NO. POINTS	PILOT	AVERAGE	RANGE	NO. POINTS	PILOT	AVERAGE	RANGE	NO. POINTS
(3+1)C MSI-SD3, MSI-SD1	A	5.25		1	A	4.75		1	A	4	4-4	2	A	2.75		1
	B				B	4		1	B				B	3.5	3-4	2
	C				C				C				C			
	D				D				D				D			
	x̄ = 5.25 σ =				x̄ = 4.38 σ = 0.38				x̄ = 4.0 σ = 0				x̄ = 3.25 σ = 0.54			
(3+1)C MSI-SD3, MSI-SD2	A	4.5	4.5	1	A	4.5		1	A	2.25		1	A	2.75	2.5-3	2
	B	4.5	4.5-4.5	2	B	4		1	B	2.5		1	B	3	3-3	2
	C	6		1	C	5.5		1	C	3		1	C	2.75	2.5-3	2
	D				D				D	3		1	D	3	3-3	2
	x̄ = 4.88 σ = 0.75				x̄ 4.67 σ = .76				x̄ = 2.69 σ = 0.32				x̄ = 2.88 σ = 0.23			
(2+1+1) MSI-SD3, MSI-SD2	A	5		1	A	3		1	A	2.5		1	A	2.5	2-3	2
	B				B				B				B	3		1
	C				C				C				C			
	D				D	5		1	D	2		1	D			
	x̄ = 5.0 σ =				x̄ = 4.0 σ = 1.0				x̄ = 2.25 σ = 0.35				x̄ = 2.67 σ = 0.47			

PHASE 2A PRIMARY MATRIX FOR 90-KT SLALOM TASK

TC ON

VMC

CMD/STAB / CONFIG.	RA/AT RA/AT				AT/AT AT/AT				AT/AS-AT/LV RA/AT-AT/LV			
	PILOT	AVERAGE	RANGE	NO. POINTS	PILOT	AVERAGE	RANGE	NO. POINTS	PILOT	AVERAGE	RANGE	NO. POINTS
(4+0) MSI-SD2	A	3		1	A	5		1	A	3	3-3	3
	B	5	4-6	2	B				B			
	C				C	5		1	C			
	D				D				D			
	$\bar{x}$ = 4.33 σ = 1.53				$\bar{x}$ = 5 σ = 0				$\bar{x}$ = 3 σ = 0			
(4+0) MSI-SD3	A	3		1	A	6		1	A	2.5		1
	B				B				B			
	C	4.63	3-6	4	C	4.5	4-5	2	C	3	2-4	2
	D				D				D			
	$\bar{x}$ = 4.3 σ = 1.30				$\bar{x}$ = 5 σ = 1.0				$\bar{x}$ = 2.83 σ = 1.04			
(3+1)C MSI-SD3, MSI-SD2	A	4		1	A	5		1	A	2.91	2-4	3
	B				B				B	2.5	2-3	2
	C	5		1	C	6		1	C			
	D				D				D			
	$\bar{x}$ = 4.5 σ = 0.707				$\bar{x}$ = 5.5 σ = 0.707				$\bar{x}$ = 2.75 σ = 0.83			
(2+1+1) MSI-SD3, MSI-SD2	A	4		1	A	5.5		1	A	2.37	2-2.5	2
	B				B				B			
	C				C	5		1	C	3		1
	D				D				D			
	$\bar{x}$ = 4.0				$\bar{x}$ = 5.25 σ = 0.35				$\bar{x}$ = 2.58 σ = 0.52			

OF POOR QUALITY

PHASE 2A PRIMARY MATRIX FOR 90-KT SLALOM TASK

TC OFF
VMC

CONFIG. \ CMD/STAB	PILOT	RA/AT RA/AT AVERAGE	RA/AT RA/AT RANGE	RA/AT RA/AT NO. POINTS	AT/AT AT/AT AVERAGE	AT/AT AT/AT RANGE	AT/AT AT/AT NO. POINTS	AT/AS-AT/LV RA/AT-AT/LV AVERAGE	AT/AS-AT/LV RA/AT-AT/LV RANGE	AT/AS-AT/LV RA/AT-AT/LV NO. POINTS
(4+0) MSI-SD2	A	4		1	6.67	6-7	3	5		1
	B									
	C	4		1				4		1
	D									
		x̄ · 4	σ · 0		x̄ · 6.67	σ · 0.58		x̄ · 4.5	σ · 0.5	
(4+0) MSI-SD3	A	5		1	7		1	4.5		1
	B				6.5	6-7	2	5		1
	C	5		1						
	D									
		x̄ · 5	σ · 0		x̄ · 6.7	σ · 0.58		x̄ · 4.75	σ · 0.35	
(3+1)C MSI-SD3, MSI-SD2	A	5.25	5-5	2	5		1	4.25	4-4.5	2
	B									
	C	6		1				4		1
	D									
		x̄ · 5.5	σ · 0.43		x̄ · 5			x̄ · 4.17	σ · 0.29	
(2+1+1) MSI-SD3, MSI-SD2	A							4.5		1
	B									
	C									
	D									
		x̄ ·	σ ·		x̄ ·	σ ·		x̄ · 4.5		

PHASE 2A PRIMARY MATRIX FOR DECEL IN TURN; LEFT TURN TASK

TC ON

VMC

CMD/STAB / CONFIG.		RA/AT RA/AT			AT/AT AT/AT			AT/AS-AT/LV RA/AT-AT/LV			AT/LV RA/AT		
	PILOT	AVERAGE	RANGE	NO. POINTS	AVERAGE	RANGE	NO. POINTS	AVERAGE	RANGE	NO. POINTS	AVERAGE	RANGE	NO. POINTS
(4+0) MSI-SD3	A	4.5		1				4	4-4	2			
	B												
	C	3		1	4.5		1	4	3-5	3	3		1
	D												
		$\bar{x}$ = 3.75 σ = 1.06			$\bar{x}$ = 4.5			$\bar{x}$ = 4.0 σ = 0.707			$\bar{x}$ = 3.0		
(3+1)C MSI-SD3, MSI-SD2	A												
	B												
	C				3		1	2.5		1			
	D												
		$\bar{x}$ = σ =			$\bar{x}$ = 3.0			$\bar{x}$ = 2.5			$\bar{x}$ = σ =		
(2+1+1) MSI-SD3, MSI-SD2	A	2.5		1				3	3-3	3			
	B												
	C	4		1				2		1			
	D												
		$\bar{x}$ = 3.25 σ = 1.06			$\bar{x}$ = σ =			$\bar{x}$ = 2.75 σ = 0.5			$\bar{x}$ = σ =		

PHASE 2A PRIMARY MATRIX FOR DECEL IN TURN; LEFT TURN TASK

TC OFF

VMC

CONFIG. \ CMD/STAB	RA/AT RA/AT				AT/AT AT/AT				AT/AS-AT/LV RA/AT-AT/LV				AT/LV RA/AT			
	PILOT	AVERAGE	RANGE	NO. POINTS	PILOT	AVERAGE	RANGE	NO. POINTS	PILOT	AVERAGE	RANGE	NO. POINTS	PILOT	AVERAGE	RANGE	NO. POINTS
(4+0) MSI-SD3	A				A				A				A			
	B				B				B				B			
	C	4		1	C	5		1	C	4		1	C			
	D				D				D				D			
		$\bar{x}$ = 4.0				$\bar{x}$ = 5.0				$\bar{x}$ = 4.0				$\bar{x}$ =	σ =	
(3+1)C MSI-SD3, MSI-SD2	A				A				A				A			
	B				B				B				B			
	C	2		1	C				C	4		1	C			
	D				D				D				D			
		$\bar{x}$ = 2.0				$\bar{x}$ =	σ =			$\bar{x}$ = 4.0				$\bar{x}$ =	σ =	
(2+1+1) MSI-SD3, MSI-SD2	A				A				A				A			
	B				B				B				B			
	C				C				C	3		1	C			
	D				D				D				D			
		$\bar{x}$ =	σ =			$\bar{x}$ =	σ =			$\bar{x}$ = 3.0				$\bar{x}$ =	σ =	

ORIGINAL PAGE IS
OF POOR QUALITY

PHASE 2A PRIMARY MATRIX FOR DECEL IN TURN; RIGHT TURN

TC ON

VMC

CMD/STAB / CONFIG.	PILOT	RA/AT RA/AT AVERAGE	RA/AT RA/AT RANGE	RA/AT RA/AT NO. POINTS	AT/AT AT/AT AVERAGE	AT/AT AT/AT RANGE	AT/AT AT/AT NO. POINTS	AT/LV HYBRID AVERAGE	AT/LV HYBRID RANGE	AT/LV HYBRID NO. POINTS	AT/LV RA/AT AVERAGE	AT/LV RA/AT RANGE	AT/LV RA/AT NO. POINTS
(4+0) MSI-SD3	A	4.37	3-4.5	4				4.5	3-5.5	5	3.62	3-4	2
	B												
	C	3		1	4.5		1	3.5	3-4	2			
	D												
		$\bar{x}$ = 4.1 σ = 0.72			$\bar{x}$ = 4.5			$\bar{x}$ = 4.21 σ = 0.96			$\bar{x}$ = 3.62 σ = 0.88		
(3+1)C MSI-SD3, MSI-SD2	A	5		1				4		1			
	B												
	C	3.33	3-4	3				2.5	2-3	2			
	D												
		$\bar{x}$ = 3.15 σ = 0.96			$\bar{x}$ = σ =			$\bar{x}$ = 3.0 σ = 1.0			$\bar{x}$ = σ =		
(2+1+1) MSI-SD3, MSI-SD2	A	4		1				2.5		1			
	B												
	C												
	D												
		$\bar{x}$ = 4			$\bar{x}$ = σ =			$\bar{x}$ = 2.5			$\bar{x}$ = σ =		

PHASE 2A PRIMARY MATRIX FOR DECEL IN TURN; RIGHT TURN TASK

TC OFF
VMC

CMD/STAB / CONFIG.	RA/AT RA/AT				AT/AT AT/AT				AT/AS-AT/LV RA/AT-AT/LV				AT/LV RA/AT			
	PILOT	AVERAGE	RANGE	NO. POINTS	PILOT	AVERAGE	RANGE	NO. POINTS	PILOT	AVERAGE	RANGE	NO. POINTS	PILOT	AVERAGE	RANGE	NO. POINTS
(4+0) MSI-SD3	A	5.5		1	A				A	4.87	4.5-5	2	A	3.5	3-4	2
	B				B				B				B			
	C	3		1	C	5		1	C	4.5		1	C			
	D				D				D				D			
	$\bar{x}$ = 4.25 σ = 1.77				$\bar{x}$ = 5.0				$\bar{x}$ = 4.75 σ = 0.43				$\bar{x}$ = 3.5 σ = 0.707			
	PILOT	AVERAGE	RANGE	NO. POINTS	PILOT	AVERAGE	RANGE	NO. POINTS	PILOT	AVERAGE	RANGE	NO. POINTS	PILOT	AVERAGE	RANGE	NO. POINTS
(3+1)C MSI-SD3, MSI-SD2	A	3	2-4	2	A				A				A			
	B				B				B				B			
	C				C				C	4		1	C			
	D				D				D				D			
	$\bar{x}$ = 3.0 σ = 1.41				$\bar{x}$ = σ =				$\bar{x}$ = 4.0				$\bar{x}$ = σ =			
	PILOT	AVERAGE	RANGE	NO. POINTS	PILOT	AVERAGE	RANGE	NO. POINTS	PILOT	AVERAGE	RANGE	NO. POINTS	PILOT	AVERAGE	RANGE	NO. POINTS
(2+1+1) MSI-SD3, MSI-SD2	A				A				A				A			
	B				B				B				B			
	C				C				C				C			
	D				D				D				D			
	$\bar{x}$ = σ =				$\bar{x}$ = σ =				$\bar{x}$ = σ =				$\bar{x}$ = σ =			

PHASE 2A PRIMARY MATRIX FOR DECEL/APPROACH TASK
VMC

CMD/STAB CONFIG.	RA/AT RA/AT				AT/AT AT/AT				AT/AS-AT/LV RA/AT-AT/LV			
	PILOT	AVERAGE	RANGE	NO. POINTS	PILOT	AVERAGE	RANGE	NO. POINTS	PILOT	AVERAGE	RANGE	NO. POINTS
(4+0) MSI-SD3	A	5.5		1	A				A	4.25	4-4.5	3
	B				B				B			
	C	3-3		2	C				C	3	3-3	2
	D				D				D			
		$\bar{x}$ = 3.83	σ = 1.44			$\bar{x}$ =	σ =			$\bar{x}$ = 3.75	σ = 0.75	
(3+1)C MSI-SD3, MSI-SD2	A				A				A			
	B				B				B			
	C	2	1.5-2.5	2	C				C	2		1
	D				D				D			
		$\bar{x}$ = 2.0	σ = 0.707			$\bar{x}$ =	σ =			$\bar{x}$ = 2.0		
(2+1+1) MSI-SD3, MSI-SD2	A				A				A			
	B				B				B			
	C				C				C			
	D				D				D			
		$\bar{x}$ =	σ =			$\bar{x}$ =	σ =			$\bar{x}$ =	σ =	

PHASE 2A PRIMARY MATRIX FOR 140-KT SLALOM TASK

TC ON
VMC

CMD/STAB / CONFIG.		RA/AT RA/AT			AT/AT AT/AT			AT/AS-AT/LV RA/AT-AT/LV		
	PILOT	AVERAGE	RANGE	NO. POINTS	AVERAGE	RANGE	NO. POINTS	AVERAGE	RANGE	NO. POINTS
(4+0) MSI-SD3	A	4	4-4	2	5.75	5.5-6	2	4.25	4-4.5	2
	B			2						
	C	4.75.	4.5-5	2	4		1	3.33	3-4	3
	D									
		$\bar{x}$ · 4.37 σ · 0.48			$\bar{x}$ · 5.16 σ · 1.04			$\bar{x}$ · 3.7 σ · 0.67		
(3+1)C MSI-SD3, MSI-SD2	A	4		1	2.5		1	2		1
	B									
	C	4		1	5	5-5	2	3	2.5-4	3
	D									
		$\bar{x}$ · 4 σ · 0			$\bar{x}$ · 4.17 σ · 1.44			$\bar{x}$ · 2.75 σ · 0.87		
(2+1+1) MSI-SD3, MSI-SD2	A	4		1				2		1
	B									
	C	2.25	2-2.5	2				2.5	2-3	4
	D									
		$\bar{x}$ · 2.83 σ · 1.04			$\bar{x}$ · σ ·			$\bar{x}$ · 2.4 σ · 0.55		

PHASE 2A PRIMARY MATRIX FOR 140-KT SLALOM TASK
TC OFF
VMC

CMD/STAB CONFIG.	RA/AT RA/AT				AT/AT AT/AT				AT/AS-AT/LV RA/AT-AT/LV			
	PILOT	AVERAGE	RANGE	NO. POINTS	PILOT	AVERAGE	RANGE	NO. POINTS	PILOT	AVERAGE	RANGE	NO. POINTS
(4+0) MSI-SD3	A	6		1	A	7		1	A	5		1
	B				B				B			
	C	4.25	4-4.5	2	C				C	4.5		1
	D				D				D			
	$\bar{x}$ · 4.83 σ · 1.04				$\bar{x}$ · 7				$\bar{x}$ · 4.75 σ · 0.35			
(3+1)C MSI-SD3, MSI-SD2	A	4.75		1	A	5.75		1	A	4.62	4-5	2
	B				B				B			
	C	4.5		1	C	7		1	C	4.5	4-5	2
	D				D				D			
	$\bar{x}$ · 4.62 σ · 0.18				$\bar{x}$ · 6.37 σ · 0.88				$\bar{x}$ · 4.56 σ · 0.51			
(3+1)C MSI-SD3, MSI-SD2	A	5		1	A				A	4.5		1
	B				B				B			
	C	3		1	C				C	2.5		1
	D				D				D			
	$\bar{x}$ · 4.0 σ · 1.41				$\bar{x}$ · σ ·				$\bar{x}$ · 3.5 σ · 1.41			

PHASE 2A SECONDARY MATRICIES

PILOT RATINGS FOR SECONDARY MATRIX

PHASE: 2A

CONTROLLER CONFIGURATION : (4+0)MSI-SD2 TASK: BOB-UP

		AC/RA			RA/AT			AT/AT			AT/LV		
		$\ddot{\psi}/\dot{\psi}$	$\ddot{\psi}/\psi_H$	$\dot{\psi}/\psi_H$	$\ddot{\psi}/\dot{\psi}$	$\ddot{\psi}/\psi_H$	$\dot{\psi}/\psi_H$	$\ddot{\psi}/\dot{\psi}$	$\ddot{\psi}/\psi_H$	$\dot{\psi}/\psi_H$	$\ddot{\psi}/\dot{\psi}$	$\ddot{\psi}/\psi_H$	$\dot{\psi}/\psi_H$
VMC	$\dot{h}/h_H$				6A						5.5A		
	$\ddot{h}/h_H$												
	$\ddot{h}/\dot{h}$						7B						6A 5.5B $\bar{x}$= 5.75 σ= .353
IMC	$\dot{h}/h_H$												
	$\ddot{h}/h_H$												
	$\ddot{h}/\dot{h}$												

VERTICAL SCAS CONFIGURATION

DIRECTIONAL SCAS CONFIGURATION

PILOT RATINGS FOR SECONDARY MATRIX

PHASE: 2A

OLD SHAPING
CONTROLLER CONFIGURATION : (4+0) MSI-S02

TASK: BOB-UP

VERTICAL SCAS CONFIGURATION

DIRECTIONAL SCAS CONFIGURATION

VMC

	AC/RA			RA/AT			AT/AT			AT/LV		
	$\ddot{\psi}/\dot{\psi}$	$\ddot{\psi}/\psi_H$	$\dot{\psi}/\psi_H$	$\ddot{\psi}/\dot{\psi}$	$\ddot{\psi}/\psi_H$	$\dot{\psi}/\psi_H$	$\ddot{\psi}/\dot{\psi}$	$\ddot{\psi}/\psi_H$	$\dot{\psi}/\psi_H$	$\ddot{\psi}/\dot{\psi}$	$\ddot{\psi}/\psi_H$	$\dot{\psi}/\psi_H$
$\dot{h}/h_H$				6A 5B 6A 5.5A $\bar{x} = 5.63$ $\sigma = .479$						5.5A		
$\ddot{h}/h_H$												
$\ddot{h}/\dot{h}$												6A 5.5A 4.5B $\bar{x} = 5.33$ $\sigma = .764$

IMC

	AC/RA			RA/AT			AT/AT			AT/LV		
	$\ddot{\psi}/\dot{\psi}$	$\ddot{\psi}/\psi_H$	$\dot{\psi}/\psi_H$	$\ddot{\psi}/\dot{\psi}$	$\ddot{\psi}/\psi_H$	$\dot{\psi}/\psi_H$	$\ddot{\psi}/\dot{\psi}$	$\ddot{\psi}/\psi_H$	$\dot{\psi}/\psi_H$	$\ddot{\psi}/\dot{\psi}$	$\ddot{\psi}/\psi_H$	$\dot{\psi}/\psi_H$
$\dot{h}/h_H$												
$\ddot{h}/h_H$												
$\ddot{h}/\dot{h}$												

PILOT RATINGS FOR SECONDARY MATRIX

PHASE: 2A **CONTROLLER CONFIGURATION :** (4+0) MSI-SD3 **TASK:** BOB-UP

VERTICAL SCAS CONFIGURATION

		AC/RA			RA/AT			AT/AT			AT/LV		
		$\ddot{\psi}/\dot{\psi}$	$\ddot{\psi}/\psi_H$	$\dot{\psi}/\psi_H$	$\ddot{\psi}/\dot{\psi}$	$\ddot{\psi}/\psi_H$	$\dot{\psi}/\psi_H$	$\ddot{\psi}/\dot{\psi}$	$\ddot{\psi}/\psi_H$	$\dot{\psi}/\psi_H$	$\ddot{\psi}/\dot{\psi}$	$\ddot{\psi}/\psi_H$	$\dot{\psi}/\psi_H$
VMC	$\dot{h}/h_H$				5A						5A		
VMC	$\ddot{h}/h_H$												
VMC	$\ddot{h}/\dot{h}$												5A 4C 3B $\bar{x} = 4.0$ $\sigma = 1.0$
IMC	$\dot{h}/h_H$												
IMC	$\ddot{h}/h_H$												
IMC	$\ddot{h}/\dot{h}$												

DIRECTIONAL SCAS CONFIGURATION

PILOT RATINGS FOR SECONDARY MATRIX

PHASE: 2A

OLD SHAPING
CONTROLLER CONFIGURATION : (4+0) MSI-S03 TASK: BOB-UP

	VERTICAL SCAS CONFIGURATION	AC/RA			RA/AT			AT/AT			AT/LV		
		$\ddot{\psi}/\dot{\psi}$	$\ddot{\psi}/\psi_H$	$\dot{\psi}/\psi_H$	$\ddot{\psi}/\dot{\psi}$	$\ddot{\psi}/\psi_H$	$\dot{\psi}/\psi_H$	$\ddot{\psi}/\dot{\psi}$	$\ddot{\psi}/\psi_H$	$\dot{\psi}/\psi_H$	$\ddot{\psi}/\dot{\psi}$	$\ddot{\psi}/\psi_H$	$\dot{\psi}/\psi_H$
VMC	$\dot{h}/h_H$				5A						6B		
	$\ddot{h}/h_H$												
	$\ddot{h}/\dot{h}$						7A 8A $\bar{x}=7.5$ $\sigma=.707$						
IMC	$\dot{h}/h_H$												
	$\ddot{h}/h_H$												
	$\ddot{h}/\dot{h}$												

DIRECTIONAL SCAS CONFIGURATION

PILOT RATINGS FOR SECONDARY MATRIX

PHASE: 2 A

CONTROLLER CONFIGURATION : (3+1) MSI-SD3
MSI-SD2

TASK: BOB-UP

VMC

VERTICAL SCAS CONFIGURATION	AC/RA			RA/AT			AT/AT			AT/LV		
	$\ddot{\psi}/\dot{\psi}$	$\ddot{\psi}/\psi_H$	$\dot{\psi}/\psi_H$	$\ddot{\psi}/\dot{\psi}$	$\ddot{\psi}/\psi_H$	$\dot{\psi}/\psi_H$	$\ddot{\psi}/\dot{\psi}$	$\ddot{\psi}/\psi_H$	$\dot{\psi}/\psi_H$	$\ddot{\psi}/\dot{\psi}$	$\ddot{\psi}/\psi_H$	$\dot{\psi}/\psi_H$
$\dot{h}/h_H$										5.5A 4C $\bar{x}= 4.75$ $\sigma = 1.06$		
$\ddot{h}/h_H$												
$\ddot{h}/\dot{h}$						5.5A						4.5A 2.5B 4C $\bar{x}= 3.67$ $\sigma = 1.04$

IMC

VERTICAL SCAS CONFIGURATION	AC/RA			RA/AT			AT/AT			AT/LV		
	$\ddot{\psi}/\dot{\psi}$	$\ddot{\psi}/\psi_H$	$\dot{\psi}/\psi_H$	$\ddot{\psi}/\dot{\psi}$	$\ddot{\psi}/\psi_H$	$\dot{\psi}/\psi_H$	$\ddot{\psi}/\dot{\psi}$	$\ddot{\psi}/\psi_H$	$\dot{\psi}/\psi_H$	$\ddot{\psi}/\dot{\psi}$	$\ddot{\psi}/\psi_H$	$\dot{\psi}/\psi_H$
$\dot{h}/h_H$												
$\ddot{h}/h_H$												
$\ddot{h}/\dot{h}$												

DIRECTIONAL SCAS CONFIGURATION

PILOT RATINGS FOR SECONDARY MATRIX

PHASE: 2A

OLD SHAPING
CONTROLLER CONFIGURATION : (3+1) MSI-SD3
MSI-SD2

TASK: BOB-UP

VMC

VERTICAL SCAS CONFIGURATION	AC/RA			RA/AT			AT/AT			AT/LV		
	$\ddot{\psi}/\dot{\psi}$	$\ddot{\psi}/\psi_H$	$\dot{\psi}/\psi_H$	$\ddot{\psi}/\dot{\psi}$	$\ddot{\psi}/\psi_H$	$\dot{\psi}/\psi_H$	$\ddot{\psi}/\dot{\psi}$	$\ddot{\psi}/\psi_H$	$\dot{\psi}/\psi_H$	$\ddot{\psi}/\dot{\psi}$	$\ddot{\psi}/\psi_H$	$\dot{\psi}/\psi_H$
$\dot{h}/h_H$										5A		
$\ddot{h}/h_H$												
$\ddot{h}/\dot{h}$						6A 7A 6A $\bar{x} = 6.33$ $\sigma = .577$						

IMC

VERTICAL SCAS CONFIGURATION	AC/RA			RA/AT			AT/AT			AT/LV		
	$\ddot{\psi}/\dot{\psi}$	$\ddot{\psi}/\psi_H$	$\dot{\psi}/\psi_H$	$\ddot{\psi}/\dot{\psi}$	$\ddot{\psi}/\psi_H$	$\dot{\psi}/\psi_H$	$\ddot{\psi}/\dot{\psi}$	$\ddot{\psi}/\psi_H$	$\dot{\psi}/\psi_H$	$\ddot{\psi}/\dot{\psi}$	$\ddot{\psi}/\psi_H$	$\dot{\psi}/\psi_H$
$\dot{h}/h_H$												
$\ddot{h}/h_H$												
$\ddot{h}/\dot{h}$												

DIRECTIONAL SCAS CONFIGURATION

PILOT RATINGS FOR SECONDARY MATRIX

PHASE: 2A **CONTROLLER CONFIGURATION :** (3+1) MSI-SD3 MSI-SS **TASK:** BOB-UP

	VERTICAL SCAS CONFIGURATION	AC/RA			RA/AT			AT/AT			AT/LV		
		$\ddot{\psi}/\dot{\psi}$	$\ddot{\psi}/\psi_H$	$\dot{\psi}/\psi_H$	$\ddot{\psi}/\dot{\psi}$	$\ddot{\psi}/\psi_H$	$\dot{\psi}/\psi_H$	$\ddot{\psi}/\dot{\psi}$	$\ddot{\psi}/\psi_H$	$\dot{\psi}/\psi_H$	$\ddot{\psi}/\dot{\psi}$	$\ddot{\psi}/\psi_H$	$\dot{\psi}/\psi_H$
VMC	$\dot{h}/h_H$												
	$\ddot{h}/h_H$												
	$\ddot{h}/\dot{h}$						5.5A 5C $\bar{x}$ = 5.25 σ = .353						5.5 A 6 A 4C $\bar{x}$ = 5.17 σ = 1.04
IMC	$\dot{h}/h_H$												
	$\ddot{h}/h_H$												
	$\ddot{h}/\dot{h}$												

DIRECTIONAL SCAS CONFIGURATION

PILOT RATINGS FOR SECONDARY MATRIX

PHASE: 2A

CONTROLLER CONFIGURATION : (4+0) MSI-SD2

TASK: NOE

VMC

VERTICAL SCAS CONFIGURATION	AC/RA			RA/AT			AT/AT			AT/LV		
	$\ddot{\psi}/\dot{\psi}$	$\ddot{\psi}/\psi_H$	$\dot{\psi}/\psi_H$	$\ddot{\psi}/\dot{\psi}$	$\ddot{\psi}/\psi_H$	$\dot{\psi}/\psi_H$	$\ddot{\psi}/\dot{\psi}$	$\ddot{\psi}/\psi_H$	$\dot{\psi}/\psi_H$	$\ddot{\psi}/\dot{\psi}$	$\ddot{\psi}/\psi_H$	$\dot{\psi}/\psi_H$
$\dot{h}/h_H$				5.5A						5A		
$\ddot{h}/h_H$												
$\ddot{h}/\dot{h}$						6B						5.5 A 6 A $\bar{x}$= 5.75 σ= .353

IMC

VERTICAL SCAS CONFIGURATION	AC/RA			RA/AT			AT/AT			AT/LV		
	$\ddot{\psi}/\dot{\psi}$	$\ddot{\psi}/\psi_H$	$\dot{\psi}/\psi_H$	$\ddot{\psi}/\dot{\psi}$	$\ddot{\psi}/\psi_H$	$\dot{\psi}/\psi_H$	$\ddot{\psi}/\dot{\psi}$	$\ddot{\psi}/\psi_H$	$\dot{\psi}/\psi_H$	$\ddot{\psi}/\dot{\psi}$	$\ddot{\psi}/\psi_H$	$\dot{\psi}/\psi_H$
$\dot{h}/h_H$												
$\ddot{h}/h_H$												
$\ddot{h}/\dot{h}$												

DIRECTIONAL SCAS CONFIGURATION

PILOT RATINGS FOR SECONDARY MATRIX

PHASE: 2A

OLD SHAPING
CONTROLLER CONFIGURATION : (4+0) **MSI-SD2** TASK: NOE

	VERTICAL SCAS CONFIGURATION	AC/RA			RA/AT			AT/AT			AT/LV		
		$\ddot{\psi}/\dot{\psi}$	$\ddot{\psi}/\psi_H$	$\dot{\psi}/\psi_H$	$\ddot{\psi}/\dot{\psi}$	$\ddot{\psi}/\psi_H$	$\dot{\psi}/\psi_H$	$\ddot{\psi}/\dot{\psi}$	$\ddot{\psi}/\psi_H$	$\dot{\psi}/\psi_H$	$\ddot{\psi}/\dot{\psi}$	$\ddot{\psi}/\psi_H$	$\dot{\psi}/\psi_H$
VMC	$\dot{h}/h_H$				5.5A 5B 5.5A 6B $\bar{x} = 5.5$ $\sigma = .408$						4.5A		
	$\ddot{h}/h_H$												
	$\ddot{h}/\dot{h}$												5.5A 5B 5.5A 7B $\bar{x} = 5.75$ $\sigma = .866$
IMC	$\dot{h}/h_H$												
	$\ddot{h}/h_H$												
	$\ddot{h}/\dot{h}$												

DIRECTIONAL SCAS CONFIGURATION

PILOT RATINGS FOR SECONDARY MATRIX

PHASE: 2A　　CONTROLLER CONFIGURATION : (4+0) **MSI-SD3**　　TASK: NOE

VERTICAL SCAS CONFIGURATION / DIRECTIONAL SCAS CONFIGURATION

VMC

	AC/RA			RA/AT			AT/AT			AT/LV		
	$\ddot{\psi}/\dot{\psi}$	$\ddot{\psi}/\psi_H$	$\dot{\psi}/\psi_H$	$\ddot{\psi}/\dot{\psi}$	$\ddot{\psi}/\psi_H$	$\dot{\psi}/\psi_H$	$\ddot{\psi}/\dot{\psi}$	$\ddot{\psi}/\psi_H$	$\dot{\psi}/\psi_H$	$\ddot{\psi}/\dot{\psi}$	$\ddot{\psi}/\psi_H$	$\dot{\psi}/\psi_H$
$\dot{h}/h_H$				4A						4A		
$\ddot{h}/h_H$												
$\ddot{h}/\dot{h}$												4.5A 5 B 3C $\bar{x} = 4.17$ $\sigma = 1.04$

IMC

	AC/RA			RA/AT			AT/AT			AT/LV		
	$\ddot{\psi}/\dot{\psi}$	$\ddot{\psi}/\psi_H$	$\dot{\psi}/\psi_H$	$\ddot{\psi}/\dot{\psi}$	$\ddot{\psi}/\psi_H$	$\dot{\psi}/\psi_H$	$\ddot{\psi}/\dot{\psi}$	$\ddot{\psi}/\psi_H$	$\dot{\psi}/\psi_H$	$\ddot{\psi}/\dot{\psi}$	$\ddot{\psi}/\psi_H$	$\dot{\psi}/\psi_H$
$\dot{h}/h_H$												
$\ddot{h}/h_H$												
$\ddot{h}/\dot{h}$												

PILOT RATINGS FOR SECONDARY MATRIX

PHASE: 2A

OLD SHAPING
CONTROLLER CONFIGURATION : (4+0) MSI-SD3

TASK: NOE

VMC

VERTICAL SCAS CONFIGURATION	AC/RA			RA/AT			AT/AT			AT/LV		
	$\ddot{\psi}/\dot{\psi}$	$\ddot{\psi}/\psi_H$	$\dot{\psi}/\psi_H$	$\ddot{\psi}/\dot{\psi}$	$\ddot{\psi}/\psi_H$	$\dot{\psi}/\psi_H$	$\ddot{\psi}/\dot{\psi}$	$\ddot{\psi}/\psi_H$	$\dot{\psi}/\psi_H$	$\ddot{\psi}/\dot{\psi}$	$\ddot{\psi}/\psi_H$	$\dot{\psi}/\psi_H$
$\dot{h}/h_H$				4.5A						7B		
$\ddot{h}/h_H$												
$\ddot{h}/\dot{h}$						5A 7.5A 7A $\bar{x}=6.5$ $\sigma=1.32$						

IMC

VERTICAL SCAS CONFIGURATION	AC/RA			RA/AT			AT/AT			AT/LV		
	$\ddot{\psi}/\dot{\psi}$	$\ddot{\psi}/\psi_H$	$\dot{\psi}/\psi_H$	$\ddot{\psi}/\dot{\psi}$	$\ddot{\psi}/\psi_H$	$\dot{\psi}/\psi_H$	$\ddot{\psi}/\dot{\psi}$	$\ddot{\psi}/\psi_H$	$\dot{\psi}/\psi_H$	$\ddot{\psi}/\dot{\psi}$	$\ddot{\psi}/\psi_H$	$\dot{\psi}/\psi_H$
$\dot{h}/h_H$												
$\ddot{h}/h_H$												
$\ddot{h}/\dot{h}$												

DIRECTIONAL SCAS CONFIGURATION

PILOT RATINGS FOR SECONDARY MATRIX

PHASE: 2A

CONTROLLER CONFIGURATION : (3+1) MS1-S03
MS1-S02

TASK: NOE

VMC

	AC/RA			RA/AT			AT/AT			AT/LV		
	$\ddot{\psi}/\dot{\psi}$	$\ddot{\psi}/\psi_H$	$\dot{\psi}/\psi_H$	$\ddot{\psi}/\dot{\psi}$	$\ddot{\psi}/\psi_H$	$\dot{\psi}/\psi_H$	$\ddot{\psi}/\dot{\psi}$	$\ddot{\psi}/\psi_H$	$\dot{\psi}/\psi_H$	$\ddot{\psi}/\dot{\psi}$	$\ddot{\psi}/\psi_H$	$\dot{\psi}/\psi_H$
$\dot{h}/h_H$										4A 4B $\bar{x} = 4.0$ $\sigma = 0.0$		
$\ddot{h}/h_H$												
$\ddot{h}/\dot{h}$						5,5A						4.5A 4B 5C $\bar{x} = 4.5$ $\sigma = 0.5$

IMC

	AC/RA			RA/AT			AT/AT			AT/LV		
	$\ddot{\psi}/\dot{\psi}$	$\ddot{\psi}/\psi_H$	$\dot{\psi}/\psi_H$	$\ddot{\psi}/\dot{\psi}$	$\ddot{\psi}/\psi_H$	$\dot{\psi}/\psi_H$	$\ddot{\psi}/\dot{\psi}$	$\ddot{\psi}/\psi_H$	$\dot{\psi}/\psi_H$	$\ddot{\psi}/\dot{\psi}$	$\ddot{\psi}/\psi_H$	$\dot{\psi}/\psi_H$
$\dot{h}/h_H$												
$\ddot{h}/h_H$												
$\ddot{h}/\dot{h}$												

VERTICAL SCAS CONFIGURATION

DIRECTIONAL SCAS CONFIGURATION

PILOT RATINGS FOR SECONDARY MATRIX

PHASE: 2A

OLD SHAPING
CONTROLLER CONFIGURATION : (3+1) MSI-S03
MSI-S02

TASK: NOE

	VERTICAL SCAS CONFIGURATION	AC/RA			RA/AT			AT/AT			AT/LV		
		$\ddot{\psi}/\dot{\psi}$	$\ddot{\psi}/\psi_H$	$\dot{\psi}/\psi_H$	$\ddot{\psi}/\dot{\psi}$	$\ddot{\psi}/\psi_H$	$\dot{\psi}/\psi_H$	$\ddot{\psi}/\dot{\psi}$	$\ddot{\psi}/\psi_H$	$\dot{\psi}/\psi_H$	$\ddot{\psi}/\dot{\psi}$	$\ddot{\psi}/\psi_H$	$\dot{\psi}/\psi_H$
VMC	$\dot{h}/h_H$										4A		
	$\ddot{h}/h_H$												
	$\ddot{h}/\dot{h}$						7A						
IMC	$\dot{h}/h_H$												
	$\ddot{h}/h_H$												
	$\ddot{h}/\dot{h}$												

DIRECTIONAL SCAS CONFIGURATION

PILOT RATINGS FOR SECONDARY MATRIX

PHASE: 2A **CONTROLLER CONFIGURATION :** (3+1) MSI-S03 MSI-SS **TASK:** NOE

	VERTICAL SCAS CONFIGURATION	AC/RA			RA/AT			AT/AT			AT/LV		
		$\ddot{\psi}/\dot{\psi}$	$\ddot{\psi}/\psi_H$	$\dot{\psi}/\psi_H$	$\ddot{\psi}/\dot{\psi}$	$\ddot{\psi}/\psi_H$	$\dot{\psi}/\psi_H$	$\ddot{\psi}/\dot{\psi}$	$\ddot{\psi}/\psi_H$	$\dot{\psi}/\psi_H$	$\ddot{\psi}/\dot{\psi}$	$\ddot{\psi}/\psi_H$	$\dot{\psi}/\psi_H$
VMC	$\dot{h}/h_H$												
	$\ddot{h}/h_H$												
	$\ddot{h}/\dot{h}$						5.5A 5B $\bar{x} = 5.25$ $\sigma = .353$						5A 5A 4B $\bar{x} = 4.66$ $\sigma = .577$
IMC	$\dot{h}/h_H$												
	$\ddot{h}/h_H$												
	$\ddot{h}/\dot{h}$												

DIRECTIONAL SCAS CONFIGURATION

PILOT RATINGS FOR SECONDARY MATRIX

PHASE: 2A **CONTROLLER CONFIGURATION :** (2+1+1) **TASK:** NOE

	VERTICAL SCAS CONFIGURATION	AC/RA			RA/AT			AT/AT			AT/LV		
		$\ddot{\psi}/\dot{\psi}$	$\ddot{\psi}/\psi_H$	$\dot{\psi}/\psi_H$	$\ddot{\psi}/\dot{\psi}$	$\ddot{\psi}/\psi_H$	$\dot{\psi}/\psi_H$	$\ddot{\psi}/\dot{\psi}$	$\ddot{\psi}/\psi_H$	$\dot{\psi}/\psi_H$	$\ddot{\psi}/\dot{\psi}$	$\ddot{\psi}/\psi_H$	$\dot{\psi}/\psi_H$
VMC	$\dot{h}/h_H$												
	$\ddot{h}/h_H$												
	$\ddot{h}/\dot{h}$												4.5A
IMC	$\dot{h}/h_H$												
	$\ddot{h}/h_H$												
	$\ddot{h}/\dot{h}$												

DIRECTIONAL SCAS CONFIGURATION

PILOT RATINGS FOR SECONDARY MATRIX

PHASE: 2A CONTROLLER CONFIGURATION : (4+0) MSI-SDL TASK: PRECISION HOVER

	VERTICAL SCAS CONFIGURATION	AC/RA			RA/AT			AT/AT			AT/LV		
		$\ddot{\psi}/\dot{\psi}$	$\ddot{\psi}/\psi_H$	$\dot{\psi}/\psi_H$	$\ddot{\psi}/\dot{\psi}$	$\ddot{\psi}/\psi_H$	$\dot{\psi}/\psi_H$	$\ddot{\psi}/\dot{\psi}$	$\ddot{\psi}/\psi_H$	$\dot{\psi}/\psi_H$	$\ddot{\psi}/\dot{\psi}$	$\ddot{\psi}/\psi_H$	$\dot{\psi}/\psi_H$
VMC	$\dot{h}/h_H$				5A						5A 4.5A $\bar{x} = 4.75$ $\sigma = .353$		
VMC	$\ddot{h}/h_H$												
VMC	$\ddot{h}/\dot{h}$						7B						3B 5A $\bar{x} = 4$ $\sigma = 1.41$
IMC	$\dot{h}/h_H$												
IMC	$\ddot{h}/h_H$												
IMC	$\ddot{h}/\dot{h}$												

DIRECTIONAL SCAS CONFIGURATION

PILOT RATINGS FOR SECONDARY MATRIX

PHASE: 2A

OLD SHAPING
CONTROLLER CONFIGURATION : (4+0) MSI-502 TASK: PRECISION HOVER

		AC/RA			RA/AT			AT/AT			AT/LV		
	VERTICAL SCAS CONFIGURATION	$\ddot{\psi}/\dot{\psi}$	$\ddot{\psi}/\psi_H$	$\dot{\psi}/\psi_H$	$\ddot{\psi}/\dot{\psi}$	$\ddot{\psi}/\psi_H$	$\dot{\psi}/\psi_H$	$\ddot{\psi}/\dot{\psi}$	$\ddot{\psi}/\psi_H$	$\dot{\psi}/\psi_H$	$\ddot{\psi}/\dot{\psi}$	$\ddot{\psi}/\psi_H$	$\dot{\psi}/\psi_H$
VMC	$\dot{h}/h_H$				5.5A 4B 5A 7B $\bar{x}$= 5.38 σ= 1.25								
	$\ddot{h}/h_H$												
	$\ddot{h}/\dot{h}$												5.5A 6A $\bar{x}$= 5.75 σ= .353
IMC	$\dot{h}/h_H$												
	$\ddot{h}/h_H$												
	$\ddot{h}/\dot{h}$												

DIRECTIONAL SCAS CONFIGURATION

PILOT RATINGS FOR SECONDARY MATRIX

PHASE: 2A   CONTROLLER CONFIGURATION : (4+0) MSI-S03   TASK: PRECISION HOVER

	VERTICAL SCAS CONFIGURATION	AC/RA			RA/AT			AT/AT			AT/LV		
		$\ddot{\psi}/\dot{\psi}$	$\ddot{\psi}/\psi_H$	$\dot{\psi}/\psi_H$	$\ddot{\psi}/\dot{\psi}$	$\ddot{\psi}/\psi_H$	$\dot{\psi}/\psi_H$	$\ddot{\psi}/\dot{\psi}$	$\ddot{\psi}/\psi_H$	$\dot{\psi}/\psi_H$	$\ddot{\psi}/\dot{\psi}$	$\ddot{\psi}/\psi_H$	$\dot{\psi}/\psi_H$
VMC	$\dot{h}/h_H$				4A						3A		
	$\ddot{h}/h_H$												
	$\ddot{h}/\dot{h}$												5A 4.5B 4C $\bar{x} = 4.5$ $\sigma = .5$
IMC	$\dot{h}/h_H$												
	$\ddot{h}/h_H$												
	$\ddot{h}/\dot{h}$												

DIRECTIONAL SCAS CONFIGURATION

PILOT RATINGS FOR SECONDARY MATRIX

PHASE: 2A

OLD SHAPING
CONTROLLER CONFIGURATION : (4+0) MSI-SD3

TASK: PRECISION HOVER

	VERTICAL SCAS CONFIGURATION	AC/RA			RA/AT			AT/AT			AT/LV		
		$\ddot{\psi}/\dot{\psi}$	$\ddot{\psi}/\psi_H$	$\dot{\psi}/\psi_H$	$\ddot{\psi}/\dot{\psi}$	$\ddot{\psi}/\psi_H$	$\dot{\psi}/\psi_H$	$\ddot{\psi}/\dot{\psi}$	$\ddot{\psi}/\psi_H$	$\dot{\psi}/\psi_H$	$\ddot{\psi}/\dot{\psi}$	$\ddot{\psi}/\psi_H$	$\dot{\psi}/\psi_H$
VMC	$\dot{h}/h_H$				7A						7.5B		
	$\ddot{h}/h_H$												
	$\ddot{h}/\dot{h}$						9A 6A $\bar{x} = 7.5$ $\sigma = 2.12$						
IMC	$\dot{h}/h_H$												
	$\ddot{h}/h_H$												
	$\ddot{h}/\dot{h}$												

DIRECTIONAL SCAS CONFIGURATION

PILOT RATINGS FOR SECONDARY MATRIX

PHASE: 2A

CONTROLLER CONFIGURATION : (3+1) MSI-SD3
MSI-SD2

TASK: PRECISION HOVER

VMC

VERTICAL SCAS CONFIGURATION	AC/RA			RA/AT			AT/AT			AT/LV		
	$\ddot{\psi}/\dot{\psi}$	$\ddot{\psi}/\psi_H$	$\dot{\psi}/\psi_H$	$\ddot{\psi}/\dot{\psi}$	$\ddot{\psi}/\psi_H$	$\dot{\psi}/\psi_H$	$\ddot{\psi}/\dot{\psi}$	$\ddot{\psi}/\psi_H$	$\dot{\psi}/\psi_H$	$\ddot{\psi}/\dot{\psi}$	$\ddot{\psi}/\psi_H$	$\dot{\psi}/\psi_H$
$\dot{h}/h_H$										4A 2.5C $\bar{x}$= 3.25 σ= 1.06		
$\ddot{h}/h_H$												
$\ddot{h}/\dot{h}$						5.5A						5A 2.5B 3C $\bar{x}$= 3.5 σ= 1.32

IMC

VERTICAL SCAS CONFIGURATION	AC/RA			RA/AT			AT/AT			AT/LV		
	$\ddot{\psi}/\dot{\psi}$	$\ddot{\psi}/\psi_H$	$\dot{\psi}/\psi_H$	$\ddot{\psi}/\dot{\psi}$	$\ddot{\psi}/\psi_H$	$\dot{\psi}/\psi_H$	$\ddot{\psi}/\dot{\psi}$	$\ddot{\psi}/\psi_H$	$\dot{\psi}/\psi_H$	$\ddot{\psi}/\dot{\psi}$	$\ddot{\psi}/\psi_H$	$\dot{\psi}/\psi_H$
$\dot{h}/h_H$												
$\ddot{h}/h_H$												
$\ddot{h}/\dot{h}$												

DIRECTIONAL SCAS CONFIGURATION

PILOT RATINGS FOR SECONDARY MATRIX

PHASE: 2A

OLD SHAPING
CONTROLLER CONFIGURATION : (3+1) MSI-SD3
MSI-SD2

TASK: PRECISION HOVER

		AC/RA			RA/AT			AT/AT			AT/LV		
		$\ddot{\psi}/\dot{\psi}$	$\ddot{\psi}/\psi_H$	$\dot{\psi}/\psi_H$	$\ddot{\psi}/\dot{\psi}$	$\ddot{\psi}/\psi_H$	$\dot{\psi}/\psi_H$	$\ddot{\psi}/\dot{\psi}$	$\ddot{\psi}/\psi_H$	$\dot{\psi}/\psi_H$	$\ddot{\psi}/\dot{\psi}$	$\ddot{\psi}/\psi_H$	$\dot{\psi}/\psi_H$
VMC	$\dot{h}/h_H$										4.5A		
	$\ddot{h}/h_H$												
	$\ddot{h}/\dot{h}$						6A 7A $\bar{x} = 6.5$ $\sigma = .707$						
IMC	$\dot{h}/h_H$												
	$\ddot{h}/h_H$												
	$\ddot{h}/\dot{h}$												

VERTICAL SCAS CONFIGURATION

DIRECTIONAL SCAS CONFIGURATION

PILOT RATINGS FOR SECONDARY MATRIX

PHASE: 2A **CONTROLLER CONFIGURATION :** (3+1) MSI-SD3 MSI-SS **TASK:** PRECISION HOVER

VMC

VERTICAL SCAS CONFIGURATION	AC/RA			RA/AT			AT/AT			AT/LV		
	$\ddot{\psi}/\dot{\psi}$	$\ddot{\psi}/\psi_H$	$\dot{\psi}/\psi_H$	$\ddot{\psi}/\dot{\psi}$	$\ddot{\psi}/\psi_H$	$\dot{\psi}/\psi_H$	$\ddot{\psi}/\dot{\psi}$	$\ddot{\psi}/\psi_H$	$\dot{\psi}/\psi_H$	$\ddot{\psi}/\dot{\psi}$	$\ddot{\psi}/\psi_H$	$\dot{\psi}/\psi_H$
$\dot{h}/h_H$												
$\ddot{h}/h_H$												
$\ddot{h}/\dot{h}$						5.5 A 6 B $\bar{x}$= 5.75 σ= .353						6A 5A 5B $\bar{x}$ = 5.33 σ = .577

IMC

VERTICAL SCAS CONFIGURATION	AC/RA			RA/AT			AT/AT			AT/LV		
	$\ddot{\psi}/\dot{\psi}$	$\ddot{\psi}/\psi_H$	$\dot{\psi}/\psi_H$	$\ddot{\psi}/\dot{\psi}$	$\ddot{\psi}/\psi_H$	$\dot{\psi}/\psi_H$	$\ddot{\psi}/\dot{\psi}$	$\ddot{\psi}/\psi_H$	$\dot{\psi}/\psi_H$	$\ddot{\psi}/\dot{\psi}$	$\ddot{\psi}/\psi_H$	$\dot{\psi}/\psi_H$
$\dot{h}/h_H$												
$\ddot{h}/h_H$												
$\ddot{h}/\dot{h}$												

DIRECTIONAL SCAS CONFIGURATION

PHASE 2B PRIMARY MATRICIES

PHASE 2B PRIMARY MATRIX FOR PRECISION HOVER
(GRIP COMPARISON)
VMC

CMD/STAB / CONFIG.	AT/LV				LV/LV				LV/PH			
	PILOT	AVERAGE	RANGE	NO. POINTS	PILOT	AVERAGE	RANGE	NO. POINTS	PILOT	AVERAGE	RANGE	NO. POINTS
(4+0) MSI-SD3 NAE GRIP	A				A				A			
	B	2		1	B	2.5	2-3	2	B			
	C	3		1	C	4		1	C			
	D	3.5	3-4	2	D	4	4-4	2	D			
	$\bar{x}$ = 3.0 σ = 0.82				$\bar{x}$ = 3.25 σ = 0.95				$\bar{x}$ = σ =			
(4+0)LSI EXPERIMENTAL GRIP	E	4			A				E	3		1
	B	3	3-3	2	B	3	3-3	3	B	3		1
	C	4		1	C	4	3-5	3	C			
	D				D	4	3-5	2	D			
	$\bar{x}$ = 3.5 σ = 0.58				$\bar{x}$ = 3.6 σ = 0.9				$\bar{x}$ = 3.0 σ = 0			
(4+0)LSI NAE GRIP	A				A				A			
	B	3		1	B	3.5	3-4	2	B			
	C	3		1	C	3	3-3	2	C			
	D				D				D			
	$\bar{x}$ = 3.0 σ = 0				$\bar{x}$ = 3.25 σ = 0.5				$\bar{x}$ = σ =			

PHASE 2B PRIMARY MATRIX FOR NOE TASK
(GRIP COMPARISON)
VMC

CMD/STAB CONFIG.	AT/LV				LV/LV				LV/PH			
	PILOT	AVERAGE	RANGE	NO. POINTS	PILOT	AVERAGE	RANGE	NO. POINTS	PILOT	AVERAGE	RANGE	NO. POINTS
(4+0) MSI-SD3 NAE GRIP	A				A				E	4	4-4	2
	B	5		1	B				B	3	3-3	2
	C				C				C	4		1
	D				D				D	4.33	4-5	3
	$\bar{x}$ = 5 σ =				$\bar{x}$ = σ =				$\bar{x}$ = 3.9 σ = .69			
(4+0)LSI EXPERIMENTAL GRIP	A				A				E	4	4-4	2
	B	4		1	B				B	3	3-3	4
	C	5.5		1	C				C	4.33	4-5	3
	D				D				D	4	4-4	2
	$\bar{x}$ = 4.75 σ = 1.06				$\bar{x}$ = σ =				$\bar{x}$ = 3.72 σ = .65			
(4+0)LSI NAE GRIP	A				A				A			
	B	4			B				B	3.5	3-4	2
	C	5			C				C	3	3-3	2
	D				D				D			
	$\bar{x}$ = 4.5 σ = .707				$\bar{x}$ = σ =				$\bar{x}$ = 3.25 σ = .5			

OF POOR QUALITY

PHASE 2B PRIMARY MATRIX FOR BOB-UP TASK
(GRIP COMPARISON)
VMC

CMD/STAB / CONFIG.	AT/LV				LV/LV				LV/PH			
(4+0) MSI-SD3 NAE GRIP	PILOT	AVERAGE	RANGE	NO. POINTS	PILOT	AVERAGE	RANGE	NO. POINTS	PILOT	AVERAGE	RANGE	NO. POINTS
	A				A				A			
	B	3	2-4	2	B	2		1	B			
	C	3.5	3-4	2	C	4.25	4-4.5	2	C			
	D	4		1	D	4	4-4	2	D			
	$\bar{x} = 3.4$ $\sigma = .89$				$\bar{x} = 3.7$ $\sigma = 0.97$				$\bar{x} =$ $\sigma =$			
(4+0)LSI EXPERIMENTAL GRIP	PILOT	AVERAGE	RANGE	NO. POINTS	PILOT	AVERAGE	RANGE	NO. POINTS	PILOT	AVERAGE	RANGE	NO. POINTS
	A				A				E	3		1
	B	3	2-4	2	B	2.33	2-3	3	B	2		1
	C	3		1	C	4	3-5	4	C			
	D				D	4		1	D			
	$\bar{x} = 3.0$ $\sigma = 1.0$				$\bar{x} = 3.375$ $\sigma = 1.2$				$\bar{x} = 2.5$ $\sigma = 0.707$			
(4+0)LSI NAE GRIP	PILOT	AVERAGE	RANGE	NO. POINTS	PILOT	AVERAGE	RANGE	NO. POINTS	PILOT	AVERAGE	RANGE	NO. POINTS
	A				A				A			
	B	3		1	B	3	2-4	2	B			
	C	3		1	C	3	3-3	2	C			
	D				D				D			
	$\bar{x} = 3$ $\sigma = 0$				$\bar{x} = 3.0$ $\sigma = 0.82$				$\bar{x} =$ $\sigma =$			

PHASE 2B PRIMARY MATRIX FOR 90-KT SLALOM TASK

TC ON - VMC

CMD/STAB CONFIG.	RA/AT RA/AT				AT/AT AT/AT				AT/AS-AT/LV RA/AT-AT/LV			
	PILOT	AVERAGE	RANGE	NO. POINTS	PILOT	AVERAGE	RANGE	NO. POINTS	PILOT	AVERAGE	RANGE	NO. POINTS
(4+0) MSI-SD3 NAE GRIP	E				E				E			
	B	3	3-3	2	B				B			
	C	3.75	3-4.5	2	C				C			
	D				D				D			
		$\bar{x}$ - 3.37	σ - 0.75			$\bar{x}$ -	σ -			$\bar{x}$ -	σ -	
(4+0)LSI EXPERIMENTAL GRIP	E				E				E	2.25	2-2.5	2
	B	2.33	2-3	3	B				B	2.33	2-3	3
	C	5.14	4.5-6	7	C				C			
	D				D				D			
		$\bar{x}$ - 4.3	σ - 1.47			$\bar{x}$ -	σ -			$\bar{x}$ - 2.3	σ - 0.45	

PHASE 2B PRIMARY MATRIX FOR BOB-UP TASK IN CALM AIR
IMC

CMD/STAB CONFIG.	AT/LV				LV/LV				LV/PH			
	PILOT	AVERAGE	RANGE	NO. POINTS	PILOT	AVERAGE	RANGE	NO. POINTS	PILOT	AVERAGE	RANGE	NO. POINTS
(4+0)LSI	A B C D	3		1	A B C D	3		1	A B C D	3		1
	$\bar{x}$ • 3.0				$\bar{x}$ • 3.0				$\bar{x}$ • 3.0			
(3+1)C	A B C D	3		1	A B C D				A B C D	2		1
	$\bar{x}$ • 3.0				$\bar{x}$ •	σ •			$\bar{x}$ • 2.0			
(2+1+1)	A B C D				A B C D				A B C D	2		1
	$\bar{x}$ •	σ •			$\bar{x}$ •	σ •			$\bar{x}$ • 2.0			

PHASE 2B PRIMARY MATRIX FOR BOB-UP TASK
IMC

CMD/STAB / CONFIG.	AT/LV				LV/LV				LV/PH			
	PILOT	AVERAGE	RANGE	NO. POINTS	PILOT	AVERAGE	RANGE	NO. POINTS	PILOT	AVERAGE	RANGE	NO. POINTS
(4+0)LSI	A				A				A			
	B	5.5	5-6	4	B	5		1	B	4	4-4	3
	C	5.5		1	C	5	4-6	8	C	4.12	3-5.5	4
	D	5		1	D				D	3		1
	$\bar{x}$ · 5.42 σ · 0.49				$\bar{x}$ · 5.0 σ · 0.61				$\bar{x}$ · 3.94 σ · 0.78			
(3+1)C	A				A				A			
	B	5		1	B				B	3	3-3	2
	C	5	4-6	3	C	4		1	C	4.17	4-4.5	3
	D	4		1	D	3	3-3	2	D			
	$\bar{x}$ · 4.8 σ · 0.84				$\bar{x}$ · 3.3 σ · 0.58				$\bar{x}$ · 3.7 σ · 0.67			
(2+1+1)	A				A				A			
	B	5		1	B	4		1	B	3		1
	C	4.5		1	C	4		1	C	4	4-4	2
	D				D				D			
	$\bar{x}$ · 4.75 σ · 0.36				$\bar{x}$ · 4.0 σ · 0				$\bar{x}$ · 3.67 σ · 0.58			

NOTE: RATINGS WITH TURBULENCE AND WIND SHEAR

ORIGINAL PAGE IS
OF POOR QUALITY

PHASE 2B PRIMARY MATRIX FOR PRECISION HOVER TASK IN CALM AIR
IMC

CMD/STAB / CONFIG.	AT/LV				LV/LV				LV/PH			
	PILOT	AVERAGE	RANGE	NO. POINTS	PILOT	AVERAGE	RANGE	NO. POINTS	PILOT	AVERAGE	RANGE	NO. POINTS
(4+0)LSI	A				A				A			
	B	2		1	B	2		1	B	2		1
	C				C				C			
	D				D	3		1	D			
	$\bar{x}$ · 2.0				$\bar{x}$ · 2.5 σ · 0.707				$\bar{x}$ · 2.0			
(3+1)C	A				A				A			
	B	3		1	B	2		1	B			
	C				C				C			
	D				D				D			
	$\bar{x}$ · 3.0				$\bar{x}$ · 2.0				$\bar{x}$ · σ ·			
(2+1+1)	A				A				A			
	B				B				B	2		1
	C				C				C			
	D				D				D	2		1
	$\bar{x}$ · σ ·				$\bar{x}$ · σ ·				$\bar{x}$ · 2.0 σ · 0			

PHASE 2B PRIMARY MATRIX FOR PRECISION HOVER TASK
IMC

CMD/STAB / CONFIG.	AT/LV				LV/LV				LV/PH			
	PILOT	AVERAGE	RANGE	NO. POINTS	PILOT	AVERAGE	RANGE	NO. POINTS	PILOT	AVERAGE	RANGE	NO. POINTS
(4+0)LSI	A				A				A			
	B	3.75	3-4	4	B	3.5	3-4	2	B	3	3-3	4
	C				C	3.78	3-5.5	7	C	3	3-3	3
	D	3		1	D				D	2.5	2-3	2
	$\bar{x}$ = 3.6 σ = 0.55				$\bar{x}$ = 3.72 σ = 0.97				$\bar{x}$ = 2.89 σ = 0.33			
(3+1)C	A				A				A			
	B	4		1	B				B	2	2-2	2
	C	3.5	3-4	2	C	3		1	C	3.33	3-4	3
	D	4		1	D	3.5	3-4	2	D			
	$\bar{x}$ = 3.75 σ = 0.5				$\bar{x}$ = 3.33 σ = 0.58				$\bar{x}$ = 2.8 σ = 0.84			
(2+1+1)	A				A				A			
	B	5		1	B	4		1	B	2		1
	C	3		1	C	3		1	C	4		1
	D				D				D			
	$\bar{x}$ = 4.0 σ = 1.4				$\bar{x}$ = 3.5 σ = 0.7				$\bar{x}$ = 3.0 σ = 1.4			

NOTE: RATINGS WITH TURBULENCE AND WIND SHEAR

PHASE 2B PRIMARY MATRIX FOR NOE TASK
IMC

CMD/STAB / CONFIG.		RA/AT RA/AT			AT/AT AT/AT			AT/LV AT/LV		
	PILOT	AVERAGE	RANGE	NO. POINTS	AVERAGE	RANGE	NO. POINTS	AVERAGE	RANGE	NO. POINTS
(4+0)LSI	A									
	B	7		1	4.5	4-5	2	4.75	4-5	4
	C							6		1
	D	6		1	4		1	5	5-5	4
		$\overline{x}$ - 6.5 σ - 0.707			$\overline{x}$ - 4.33 σ - 0.57			$\overline{x}$ - 5.0 σ - 0.5		
(3+1)C	A									
	B	7		1	4		1	4.33	4-5	3
	C	6		1				4		1
	D	6		1	6		1	5		1
		$\overline{x}$ - 6.33 σ - 0.57			$\overline{x}$ - 5.0 σ - 1.41			$\overline{x}$ - 4.4 σ - 0.55		
(2+1+1)	A									
	B	10		1	5	5-5	2	5	5-5	2
	C	10		1				5		1
	D	5		1				4.5	4-5	2
		$\overline{x}$ - 8.33 σ - 2.89			$\overline{x}$ - 5.0 σ - 0			$\overline{x}$ - 4.8 σ - 0.45		

PHASE 2B PRIMARY MATRIX FOR 30-KT SLALOM TASK

IMC

CMD/STAB / CONFIG.	PILOT	RA/AT AVERAGE	RA/AT RANGE	RA/AT NO. POINTS	AT/AT AVERAGE	AT/AT RANGE	AT/AT NO. POINTS	A$\dot{T}$/LV AVERAGE	A$\dot{T}$/LV RANGE	A$\dot{T}$/LV NO. POINTS
(4+0)LSI	A									
	B	6		1	7	7-7	2	5	5-5	2
	C	5		1	6		1	5.5	4.5-6	3
	D	6		1	5		1	5		1
		$\bar{x} \cdot 5.67$ $\sigma \cdot 0.58$			$\bar{x} \cdot 6.25$ $\sigma \cdot 0.96$			$\bar{x} \cdot 5.25$ $\sigma \cdot 0.61$		
(3+1)C	A									
	B	6		1	6		1	5	5-5	3
	C	7		1	4		1	4.4	3-5	5
	D									
		$\bar{x} \cdot 6.5$ $\sigma \cdot 0.707$			$\bar{x} \cdot 5.0$ $\sigma \cdot 1.4$			$\bar{x} \cdot 4.63$ $\sigma \cdot 0.74$		
(2+1+1)	A									
	B	6		1	5		1	4	4-4	2
	C	4		1	4		1	3.5	3-4	2
	D									
		$\bar{x} \cdot 5$ $\sigma \cdot 1.4$			$\bar{x} \cdot 4.5$ $\sigma \cdot 0.707$			$\bar{x} \cdot 3.75$ $\sigma \cdot 0.5$		

PHASE 2B PRIMARY MATRIX FOR 90-KT SLALOM TASK

IMC

CMD/STAB CONFIG.	RA/AT RA/AT				AT/AT AT/AT				AT/AS-AT/LV RA/AT-AT/LV			
	PILOT	AVERAGE	RANGE	NO. POINTS	PILOT	AVERAGE	RANGE	NO. POINTS	PILOT	AVERAGE	RANGE	NO. POINTS
(4+0)LSI	A				A				A			
	B	4		1	B	4		1	B	3.5	3-4	2
	C				C				C			
	D	5		1	D				D	5	5-5	3
	$\bar{x} = 4.5$ $\sigma = 0.707$				$\bar{x} = 4.0$ $\sigma =$				$\bar{x} = 4.4$ $\sigma = 0.89$			
(3+1)C	A				A				A			
	B	4		1	B	4.5	4-5	2	B	4	4-4	2
	C				C				C	3		1
	D				D				D			
	$\bar{x} = 4.0$ $\sigma =$				$\bar{x} = 4.5$ $\sigma = 0.707$				$\bar{x} = 3.67$ $\sigma = 0.58$			
(2+1+1)	A				A				A			
	B	4		2	B				B	3.5	3-4	2
	C	3		1	C	3	3-3	2	C	3.33	3-4	3
	D				D				D			
	$\bar{x} = 3.67$ $\sigma = 0.58$				$\bar{x} = 3$ $\sigma = 0$				$\bar{x} = 3.4$ $\sigma = 0.55$			

ORIGINAL PAGE IS
OF POOR QUALITY

PHASE 2B PRIMARY MATRIX FOR STRAIGHT DECEL TASK
IMC

CMD/STAB / CONFIG.	RA/AT RA/AT				AT/AT AT/AT				AT/AS-AT/LV RA/AT-AT/LV			
	PILOT	AVERAGE	RANGE	NO. POINTS	PILOT	AVERAGE	RANGE	NO. POINTS	PILOT	AVERAGE	RANGE	NO. POINTS
(4+0)LSI	A				A				A			
	B	6		1	B				B	5		1
	C				C				C	5		1
	D	7		1	D				D	6		1
	$\bar{x}$ · 6.5 σ · 0.707				$\bar{x}$ · σ ·				$\bar{x}$ · 5.33 σ · 0.58			
(3+1)C	A				A				A			
	B	5		1	B				B	3	3-3	2
	C				C				C	3		1
	D	5		1	D				D	3		1
	$\bar{x}$ · 5.0 σ · 0				$\bar{x}$ · σ ·				$\bar{x}$ · 3.0 σ · 0			
(2+1+1)	A				A				A			
	B	6.5	6-7	2	B				B	5	4-6	2
	C	4		1	C	4		1	C	3		1
	D	6		1	D				D	5		1
	$\bar{x}$ · 5.75 σ · 1.25				$\bar{x}$ · 4.0				$\bar{x}$ · 4.5 σ · 1.3			

PHASE 2B PRIMARY MATRIX FOR LEFT TURNING DECEL TO HOVER TASK
IMC

CONFIG. \ CMD/STAB	RA/AT RA/AT				AT/AT AT/AT				AT/AS-AT/LV RA/AT-AT/LV			
	PILOT	AVERAGE	RANGE	NO. POINTS	PILOT	AVERAGE	RANGE	NO. POINTS	PILOT	AVERAGE	RANGE	NO. POINTS
(4+0)LSI	A				A				A			
	B	6		1	B				B	6	5-7	3
	C				C				C			
	D	7		1	D				D	5.5	5-6	2
	$\bar{x}$ = 6.5 σ = 0.707				$\bar{x}$ = σ =				$\bar{x}$ = 5.8 σ = 0.84			
	PILOT	AVERAGE	RANGE	NO. POINTS	PILOT	AVERAGE	RANGE	NO. POINTS	PILOT	AVERAGE	RANGE	NO. POINTS
(3+1)C	A				A				A			
	B	5		1	B	4		1	B	4	3-5	3
	C				C				C			
	D	5	5-5	2	D				D	5.33	5-6	3
	$\bar{x}$ = 5.0 σ = 0				$\bar{x}$ = 4.0				$\bar{x}$ = 4.67 σ = 1.03			
	PILOT	AVERAGE	RANGE	NO. POINTS	PILOT	AVERAGE	RANGE	NO. POINTS	PILOT	AVERAGE	RANGE	NO. POINTS
(2+1+1)	A				A				A			
	B	5		1	B				B	4.5	4-5	2
	C				C				C			
	D	6		1	D				D	5	5-5	2
	$\bar{x}$ = 5.5 σ = 0.707				$\bar{x}$ = σ =				$\bar{x}$ = 4.75 σ = 0.5			

PHASE 2B PRIMARY MATRIX FOR RIGHT TURNING DECEL TO HOVER TASK
IMC

CMD/STAB / CONFIG.	RA/AT RA/AT				AT/AT AT/AT				AT/AS-AT/LV RA/AT-AT/LV			
	PILOT	AVERAGE	RANGE	NO POINTS	PILOT	AVERAGE	RANGE	NO POINTS	PILOT	AVERAGE	RANGE	NO POINTS
(4+0)LSI	A				A				A			
	B				B				B	6	6-6	2
	C				C				C			
	D				D				D			
	$\bar{x}$ ·	σ ·			$\bar{x}$ ·	σ ·			$\bar{x}$ · 6.0	σ · 0		
(3+1)C	A				A				A			
	B	5	5-5	2	B				B	5	4-6	3
	C				C				C			
	D				D				D	4.25	4-5	4
	$\bar{x}$ · 5.0	σ · 0			$\bar{x}$ ·	σ ·			$\bar{x}$ · 4.6	σ · 0.79		
(2+1+1)	A				A				A			
	B	5		1	B	3		1	B	3.5	3-4	2
	C				C				C			
	D				D				D			
	$\bar{x}$ · 5.0	σ ·			$\bar{x}$ · 3.0	σ ·			$\bar{x}$ · 3.5	σ · 0.707		

1. Report No. NASA CR- 177339 and USAAVSCOM TR 84-A-7	2. Government Accession No.	3. Recipient's Catalog No.
4. Title and Subtitle Development of ADOCS Controllers and Control Laws Volume 3 - Simulation Results and Recommendations		5. Report Date March 1985
		6. Performing Organization Code
7. Author(s) K. H. Landis, S. I. Glusman		8. Performing Organization Report No. D210-12323-3
		10. Work Unit No. 1L263211D315
9. Performing Organization Name and Address Boeing Vertol Company P. O. Box 16858 Philadelphia, PA 19142		11. Contract or Grant No. NAS2-10880
		13. Type of Report and Period Covered Final Report 1/81 - 6/84
12. Sponsoring Agency Name and Address National Aeronautics and Space Administration Washington, DC 20546 & U.S. Army Aviation Systems Command, St. Louis, MO 63166		14. Sponsoring Agency Code 505-42-11

15. Supplementary Notes

Point of Contact: Technical Monitor, Edwin W. Aiken, Ames Research Center, Moffett Field, CA 94035. Phone: (415) 694-5362; FTS: 464-5362, AUV: 359-5362

16. Abstract

The Advanced Cockpit Controls/Advanced Flight Control System (ACC/AFCS) study was conducted by the Boeing Vertol Company as part of the Army's Advanced Digital/Optical Control System (ADOCS) program. Specifically, the ACC/AFCS investigation was aimed at developing the flight control laws for the ADOCS demonstrator aircraft that will provide satisfactory handling qualities for an attack helicopter mission. The three major elements of design considered during the ACC/AFCS study are summarized as follows: Pilot's Integrated Side-Stick Controller (SSC) -- Number of axes controlled; force/displacement characteristics; ergonomic design. Stability and Control Augmentation System (SCAS)--Digital flight control laws for the various mission phases; SCAS mode switching logic. Pilot's Displays--For night/adverse weather conditions, the dynamics of the superimposed symbology presented to the pilot in a format similar to the Advanced Attack Helicopter (AAH) Pilot Night Vision System (PNVS) for each mission phase as a function of SCAS characteristics; display mode switching logic. Volume I is an Executive Summary of the study. Findings from the literature review and the analysis and synthesis of desired control laws are reported in Volume 2. Results of the five piloted simulations conducted at the Boeing Vertol and NASA-Ames simulation facilities are presented in Volume 3. Conclusions drawn from analysis of pilot rating data and commentary were used to formulate recommendations for the ADOCS demonstrator flight control system design. The ACC/AFCS simulation data also provide an extensive data base to aid the development of advanced flight control system design for future V/STOL aircraft.

17. Key Words (Suggested by Author(s)) Flying Qualities Flight Simulation Flight Control Systems Side-Stick Controllers Cockpit Displays	Helicopter Rotorcraft	18. Distribution Statement Unclassified - [redacted] Subject Category 08	
19. Security Classif. (of this report) Unclassified	20. Security Classif. (of this page) Unclassified	21. No. of Pages 313	22. Price*

*For sale by the National Technical Information Service, Springfield, Virginia 22161

[redacted]