Lawrence Berkeley National Laboratory

Lawrence Berkeley National Laboratory

Title

LONGITUDINAL RESISTIVE INSTABILITIES OF INTENSE COASTING BEAMS IN PARTICLE ACCELERATORS

Permalink

https://escholarship.org/uc/item/13q2p44g

Author

Neil, V. Kelvin

Publication Date

2008-10-03

eScholarship.org Powered by the California Digital Library
University of California

UCRL-11089 Rev

C.2

University of California

Ernest O. Lawrence Radiation Laboratory

LONGITUDINAL RESISTIVE INSTABILITIES
OF INTENSE COASTING BEAMS IN PARTICLE
ACCELERATORS

TWO-WEEK LOAN COPY

This is a Library Circulating Copy which may be borrowed for two weeks. For a personal retention copy, call Tech. Info. Division, Ext. 5545

Berkeley, California

Submitted for publication to
Review Scientific Instruments

UCRL-11089 Rev.

UNIVERSITY OF CALIFORNIA

Lawrence Radiation Laboratory
Berkeley, California

AEC Contract No. W-7405-eng-48

LONGITUDINAL RESISTIVE INSTABILITIES OF INTENSE COASTING BEAMS IN PARTICLE ACCELERATORS

V. Kelvin Neil and Andrew M. Sessler

September 29, 1964

UCRL-11089 Rev.

LONGITUDINAL RESISTIVE INSTABILITIES OF INTENSE COASTING BEAMS IN PARTICLE ACCELERATORS*

V. Kelvin Neil and Andrew M. Sessler

Lawrence Radiation Laboratory
University of California
Livermore and Berkeley, California

September 29, 1964

ABSTRACT

The effect of finite resistance in the vacuum-tank walls on the longitudinal stability of an intense beam of particles in an accelerator is investigated theoretically. We show that even if the particle frequency is an increasing function of particle energy, the wall resistance can render the beam unstable against longitudinal bunching. In the absence of frequency spread in the unperturbed beam, the instability occurs with a growth rate that is proportional to $(N/\sigma)^{1/2}$, where N is the number of particles in the beam and σ is the conductivity of the surface material. By means of the Vlasov equation a criterion for beam stability is obtained. In the limit of highly conducting walls the criterion involves the frequency spread in the unperturbed beam, the number of particles N, the beam energy, geometrical properties of the accelerator, but not the conductivity σ. A numerical example presented indicates that certain observations of beam behavior in the MURA 40-MeV electron accelerator may be related to the phenomenon we investigated.

I. INTRODUCTION

The observation that longitudinal density fluctuations in an electron stream may be amplified by the resistance in the surrounding walls was first made by Birdsall, who used the concept to construct a resistive-wall amplifier. Pierce has presented a general theory of "slow wave" amplifiers,[1] whereas Birdsall and Whinnery have given a general analysis of such structures.[2]

The purpose of our work is to extend the theory developed for the analysis of traveling-wave tubes to an analysis of longitudinal resistive instabilities of intense relativistic beams in cyclic particle accelerators. In contrast to the hydrodynamic approach in Ref. 2, the theory presented here includes details of the particle dynamics that are vital to obtaining the criterion for stability. Our work is also an extension of previous studies of longitudinal instabilities[3,4,5] and draws heavily upon the notation of Ref. 4. Our analysis was stimulated by experiments with the MURA 40 MeV electron accelerator; these experiments show a pronounced longitudinal bunching of the beam near the injection energy.[6] Although the observed instability above the transition energy is well understood, and had even been predicted theoretically in Ref. 4, the observations of bunching below the transition energy came initially as a surprise. The analysis presented here culminates in a criterion for stability and a growth rate in the absence of stability, both of which are in approximate agreement with the observations at MURA. The theory suggests further experiments suitable for determining whether or not the observed phenomenon

is in fact a resistive instability. In addition, the theory suggests limitations on the design of high-current particle accelerators.

In the following linear-perturbation treatment, the unperturbed beam is taken to be uniform in the azimuthal (θ) direction. A perturbation in particle density of the form $\exp[i(n\theta - \omega t)]$ is assumed. The electric and magnetic fields arising from the perturbation are calculated in Sec. II for two different geomertries. In Sec. III the Vlasov equation and the formalism of Refs. 4 and 5 are employed to derive a dispersion relation that determines the allowed values of the frequency ω. Section IV is a discussion of the dispersion relation. The analysis shows that resistance in the surrounding walls leads to exponential growth of the density fluxuation if all particles in the unperturbed beam have the same circulation frequency. The growth rate is proportional to $\sigma^{-1/2}$, where σ is the conductivity of the wall material. An effective stabilizing mechanism is a spread in particle-circulation frequency arising primarily from a spread in particle energy. Because the contribution to the azimuthal electric field E_θ from the finite resistance in the walls is very much smaller than this field in the absence of resistance, the stability criterion is quite sensitive to the distribution of circulation frequencies in the unperturbed beam. For a realistic energy distribution and highly conducting surfaces, the stability criterion is independent of σ. A numerical example, namely an application of the results to the MURA 40-MeV electron accelerator, is given in Sec. V.

II. SOLUTION OF MAXWELL'S EQUATIONS

In this section we obtain the electric and magnetic fields associated with a perturbed density that varies as $\exp[i(n\theta - \omega t)]$, where n is an integer. We consider two simplified models of the beam and vacuum tank. The first is a beam of circular cross section centrally located in a tank of circular cross section. The longitudinal wavelength $2\pi R/n$ is assumed large compared to the minor radius of the tank. From this model simple analytic formulas may be obtained for the fields. The second model is a tank of rectangular-cross-section in which the beam is located in the median plane of the cavity. The beam is finite horizontally, but is infinitely thin in the vertical direction. Finite resistance in the top and bottom tank walls is incorporated in the calculation, but the side walls are assumed to be perfectly conducting. In both geometries the major curvature of the vacuum tank is ignored, and Maxwell's equations are solved for a straight pipe.

A. Vacuum Tank of Circular Cross Section

We consider a beam moving along the axial (z) direction in a pipe of radius b. Let the beam have uniform density out to a radius a, as illustrated in Fig. 1. The perturbation is assumed to vary as $\exp[i(kz - \omega t)]$, so when we relate this calculation to an actual accelerator we will replace k by (n/R) and z by $R\theta$, where R is the major radius at which the beam circulates. The perturbed change (ρ) and current (j) densities are

$$\rho(z,t) = \begin{cases} \rho_1 e^{i(kz-\omega t)} & \text{when} \quad r < a \quad , \\ 0 & \text{when} \quad r > a \quad , \end{cases} \tag{2.1a}$$

$$j_z = \omega\rho/k \quad . \tag{2.1b}$$

In this section perturbed quantities carry no subscript. The electric and magnetic fields arising from these sources have components E_r, E_z, B_ϕ, all with z and t dependence given by $\exp[i(kz - \omega t)]$.

The complete solution to Maxwell's equations may be exhibited in terms of modified Bessel functions. If the condition

$$k^2 - (\omega/c)^2 \ll b^{-2} \tag{2.2}$$

holds, an expression for E_z inside the beam may be obtained by a simple application of the equation

$$\int \underset{\sim}{E} \cdot d\underset{\sim}{\ell} = -\frac{1}{c}\frac{\partial}{\partial t}\int \underset{\sim}{B} \cdot d\underset{\sim}{a} \quad . \tag{2.3}$$

As shown in the next section, the pertinent value of ω is such that ω/k is very nearly equal to the main speed v of particles in the unperturbed beam. Therefore Eq. (2.2) may be stated as $b/\gamma\lambda \ll 1$, where λ is the wavelength of the perturbation and $\gamma = [1 - (v/c)^2]^{-1/2}$. When this condition holds, the radial electric field is given approximately by

$$E_r = 2\pi\rho_1 e^{i(kz-\omega t)} \times \begin{cases} r & \text{when} \quad r < a \quad , \\ a^2/r & \text{when} \quad r > a \quad , \end{cases} \tag{2.4}$$

From the radial component of the equation

$$\nabla \times \underset{\sim}{B} = \frac{1}{c}\frac{\partial \underset{\sim}{E}}{\partial t} + \frac{4\pi}{c}\underset{\sim}{j} \tag{2.5a}$$

we find

$$B_\phi = \omega E_r/kc \ . \tag{2.5b}$$

The only boundary condition that must be satisfied at $r = b$ is

$$E_z = -(1 - i)\mathcal{R}B_\phi \ , \tag{2.6}$$

where $\mathcal{R} = (\omega/8\pi\sigma)^{1/2}$ and σ is the conductivity of the wall material in $\sec^{-1}$. From Eqs. (2.4), (2.5), and (2.6) we have

$$E_z(r = b) = -2\pi\rho_1(1 - i)\mathcal{R}(\omega/kc)(a^2/b)e^{i(kz-\omega t)} \ . \tag{2.7}$$

We now apply Eq. (2.3) to a surface (Fig. 1) with the following perimeter: from a point z,b on the wall radially inward to a point $r < a$, along the z axis a distance dz, radially outward to a point $z + dz,b$ on the wall, and then along the wall back to the starting point. Inserting Eqs. (2.5b) and (2.7) into Eq. (2.3), we have

$$\int_b^r E_r(r',z)dr' + \int_r^b E_r(r',z + dz)dr' + [E_z(r,z) + 2\pi\rho_1(1 - i)\mathcal{R}(\omega/kc)(a^2/b)]dz = \frac{i\omega^2}{kc^2}\int_r^b E_r(r',z)dr\ dz \ . \tag{2.8}$$

If we divide by dz and take the limit $dz \to 0$, the first two terms on the left-hand side of Eq. (2.8) become

$$\int_r^b \frac{\partial}{\partial z} E_r dr \quad .$$

Inserting Eq. (2.4) for E_r and performing the necessary integrations, we obtain

$$E_z = 2\pi\rho_1 a^2 e^{i(kz-\omega t)} \left\{ ik(1 - \beta_w^2)\left[\ln(a/b) + \frac{r^2}{2a^2} - \frac{1}{2}\right] \right.$$

$$\left. -(1 - i)\mathcal{R}\beta_w/b \right\} \quad , \qquad (2.9)$$

an expression valid for $r < a$. In Eq. (2.10) $\beta_w \equiv \omega/kc$ is the phase velocity of the perturbation in units of c.

In Sec. III we need the azimuthal electric field that acts on the particles. This involves some average of E_z over the beam cross section, but in view of the approximations inherent in Eq. (2.1), the precise average required is not clear. Because E_z varies slowly across the beam, we will continue in the spirit of Ref. 4 and employ $E_z(r = 0)$, although $E_z(r = a)$ is probably more accurate.

Introducing the perturbed charge per unit length $\lambda \equiv \pi\rho_1 a^2 \exp[i(kz - \omega t)]$, we have for the total field in the z direction:

$$(\underset{\sim}{E}\cdot\hat{z})_{r=0} = -\frac{\partial\lambda}{\partial z}(1 - \beta_w^2)[1 + 2\ln(b/a)] - \frac{2\mathcal{R}\beta_w}{b}\lambda \ , \qquad (2.10a)$$

in which we have neglected the term proportional to $i\mathcal{R}$ for reasons given below. We note that the out-of-phase contribution decreases like $\gamma_w^{-2} = 1 - \beta_w^2$, involves a geometric factor, and is proportional to the variation of charge in the z direction--results all familiar from

previous studies.[4] The (new) in-phase component exists only because of the wall resistivity, and furthermore does not vanish as $k \to 0$ or as $\beta_w \to 1$. In all practical applications it appears that $\mathcal{R}$ is sufficiently small that the in-phase component is small compared to the (usual) out-of-phase component.

In the notation used in the next section, we have

$$\langle RE_\theta \rangle = -in\lambda(1 - \beta_w^2)[1 + 2\ln(b/a)] - 2\mathcal{R}\beta_w(R/b)\lambda \ , \qquad (2.10b)$$

where n is the number of waves about the circumference, and the perturbed charge per unit azimuthal length λ is written in the form $\lambda = \lambda_1 \exp[i(n\theta - \omega t)]$.

B. Vacuum Tank of Rectangular Cross Section

In this section we consider a beam infinitely thin in the vertical (z) direction located in the median plane of a rectangular duct of height h and width w, as illustrated in Fig. 2. The beam-charge distribution in the x direction is assumed to be unaltered by the longitudinal bunching and determined by initial conditions so the perturbed surface-charge distribution $\sigma(x,y,t)$ is taken to be of the form

$$\sigma(x,y,t) = \lambda_1 \sigma(x) e^{i(ky-\omega t)} \ , \qquad (2.11)$$

with $\sigma(x)$ normalized so that $\int_0^w \sigma(x)dx = 1$. Conservation of charge implies a surface-current distribution $j_y(x,y,t)$ just equal to (ω/k) times $\sigma(x,y,t)$.

The boundary conditions for the electric and magnetic fields are taken to be those appropriate to perfectly conducting surfaces at the side walls so that the tangential electric and normal magnetic fields vanish at $x = 0$ and $x = w$. On the top surface ($z = h/2$) we require

$$E_x = (1 - i)\mathcal{R} B_y$$
$$E_y = -(1 - i)\mathcal{R} B_x \quad , \tag{2.12a}$$

and on the bottom surface ($z = -h/2$) we require

$$E_x = -(1 - i)\mathcal{R} B_y$$
$$E_y = (1 - i)\mathcal{R} B_x \quad , \tag{2.12b}$$

where $\mathcal{R}$ has been defined following Eq. (2.6).

Expressions for the fields are most easily written as two sets, transverse magnetic (TM) and transverse electric (TE), with transverse referring to the z direction. Each set independently satisfies Maxwell's equations for free space everywhere inside the tank except at $z = 0$, and also satisfies Eqs. (2.12a) and (2.12b). The desired expressions are as follows:

$$\underset{\sim}{E}_{TM} = e^{i(ky-\omega t)} \sum_s E_s \left\{ \left[\mp \sinh \nu(z \mp \tfrac{h}{2}) - \frac{i\omega}{\nu c}(1-i)\mathcal{R} \cosh \nu(z \mp \tfrac{h}{2}) \right] \right.$$

$$\times \left[\eta \cos \eta x \hat{i} + i k \sin \eta x \hat{j} \right]$$

$$\left. + \left[\mp \cosh \nu(z \mp \tfrac{h}{2}) - \frac{i\omega}{\nu c}(1-i)\mathcal{R} \sinh \nu(z \mp \tfrac{h}{2}) \right] \frac{\ell^2}{\nu} \sin \eta x \hat{k} \right\}, \tag{2.13}$$

$$\underset{\sim}{B}_{TM} = e^{i(ky-\omega t)} \sum_s \left(\frac{i\omega}{\nu c} \right) E_s \left[\mp \cosh \nu(z \mp \tfrac{h}{2}) \right.$$

$$\left. - \frac{i\omega}{\nu c}(1-i)\mathcal{R} \sinh \nu(z \mp \tfrac{h}{2}) \right]$$

$$\times \left[- ik \sin \eta x \hat{i} + \eta \cos \eta x \hat{j} \right], \tag{2.14}$$

$$\underset{\sim}{E}_{TE} = e^{i(ky-\omega t)} \sum_s \left(\frac{i\omega}{\nu c} \right) B_s \left[\mp \sinh \nu(z \mp \tfrac{h}{2}) \right.$$

$$\left. + \frac{i\nu c}{\omega}(1-i)\mathcal{R} \cosh \nu(z \mp \tfrac{h}{2}) \right]$$

$$\times \left[ik \cos \eta z \hat{i} + \eta \sin \eta z \hat{j} \right], \tag{2.15}$$

$$\underset{\sim}{B}_{TE} = e^{i(ky-\omega t)} \sum_s B_s \left\{ \left[\mp \cosh \nu(z \mp \tfrac{h}{2}) + \frac{i\nu c}{\omega}(1-i)\mathcal{R} \sinh \nu(z \mp \tfrac{h}{2}) \right] \right.$$

$$\times \left[- \eta \sin \eta x \hat{i} + i k \cos \eta x \hat{j} \right]$$

$$\left. + \left[\mp \sinh \nu(z \mp \tfrac{h}{2}) + \frac{i\nu c}{\omega}(1-i)\mathcal{R} \cosh \nu(z \mp \tfrac{h}{2}) \right] \frac{\ell^2}{\nu} \cos \eta x \hat{k} \right\}. \tag{2.16}$$

In these expressions $\eta = s\pi/w$, $\ell^2 = \eta^2 + k^2$, $\nu^2 = \ell^2 - (\omega/c)^2$, and s is an integer. The subscript s on these quantities has been omitted for brevity. The top and bottom signs apply when $z > 0$ and $z < 0$ respectively.

We determine the constants E_s and B_s from the discontinuity conditions at $z = 0$:

$$E_z^+ - E_z^- = 4\pi\sigma(x,y,t) \quad , \tag{2.17a}$$

$$B_x^+ - B_x^- = 4\pi j(x,y,t)/c \quad . \tag{2.17b}$$

Expanding $\sigma(x)$ in a Fourier sin series in x,

$$\sigma(x) = \left(\frac{2}{w}\right)\sum_s \sigma_s \sin \eta x \quad , \tag{2.18}$$

we find

$$E_s = -\frac{4\pi}{w}\lambda_1\sigma_s\left(\frac{\nu}{\ell^2}\right)\left[\cosh\left(\frac{\nu h}{2}\right) - \frac{i\omega}{\nu c}(1-i)\mathcal{R}\sinh\left(\frac{\nu h}{2}\right)\right] . \tag{2.19}$$

and

$$B_s = \frac{4\pi}{w}\lambda_1\sigma_s\beta_w\left(\frac{\eta}{\ell^2}\right)\left[\cosh\left(\frac{\nu h}{2}\right) + \frac{i\nu c}{\omega}(1-i)\mathcal{R}\sinh\left(\frac{\nu h}{2}\right)\right] . \tag{2.20}$$

The only field component that enters into the Vlasov equation in Sec. III is $E_y(z = 0)$. After some simplification we have, to first order in $\mathcal{R}$,

$$E_y(z=0) = -\frac{4\pi}{w} i\lambda_1 e^{i(ky-\omega t)}\sum_s \sigma_s \sin \eta x$$

$$\times\left[\frac{k}{\nu}(1-\beta_w^2)\tanh\left(\frac{\nu h}{2}\right) - i(1-i)\mathcal{R}\beta_w \operatorname{sech}^2\left(\frac{\nu h}{2}\right)\right] . \tag{2.21}$$

We may ignore the term proportional to $(-i)^2\mathcal{R}$. If the perturbation wavelength is long compared to the transverse dimensions of the vacuum tank, then $\eta >> k$ and $\nu \approx \ell \approx \eta$.

In Sec. III we need the average azimuthal electric field that acts on the particles. This average is obtained by multiplying Eq. (2.21) by $\sigma(x)$ and integrating the equation over x. Using Eq. (2.18) as well as the normalization condition on $\sigma(x)$, we obtain

$$\langle RE_\theta \rangle = - \frac{4\pi i \lambda_1 R e^{i(n\theta - \omega t)}}{w} \sum_s \sigma_s^2 \left\{ \frac{n}{R\nu} (1 - \beta_w^2) \tanh\left(\frac{\nu h}{2}\right) - i\mathcal{R}\beta_w \operatorname{sech}^2\left(\frac{\nu h}{2}\right) \right\} \tag{2.22}$$

where we have replaced y by $R\theta$ and k by n/R.

This general expression may prove useful in some applications. We have evaluated it numerically for a particular choice of $\sigma(x)$ that has two parameters, namely that representing a beam of width Δ with center x_0 as indicated in Fig. 2. The functional form chosen was

$$\sigma(x) = \begin{cases} \frac{\pi}{2\Delta} \cos \frac{\pi}{\Delta} (x - x_0) & , \quad \text{when} \quad |x - x_0| < \Delta/2 \\ 0 & , \quad \text{when} \quad |x - x_0| \geq \Delta/2 \end{cases} \tag{2.23}$$

and a 7094 FORTRAN program[9] was developed to evaluate the quantities:

$$\text{Relong} = \sum_s \sigma_s^2 (1 - \beta_w^2) \frac{n}{R\nu} \tanh\left(\frac{\nu h}{2}\right) \tag{2.24a}$$

$$\mathrm{Imlong} = \sum_s \sigma_s^{\,2} \beta_w \operatorname{sech}^2\left(\frac{\nu h}{2}\right) \quad . \tag{2.24b}$$

In terms of these,

$$\langle RE_\theta \rangle = -4\pi i \lambda \left(\frac{R}{w}\right)[\mathrm{Relong} - i\mathcal{R}\,\mathrm{Imlong}] \quad . \tag{2.25}$$

III. THE DISPERSION RELATION

The motion of the particles is treated by means of the Vlasov equation, which we solve in cylindrical coordinates. We incorporate the formalism of Refs. 4 and 5, and in particular the canonical variables θ and W for the azimuthal motion. The quantity $W = 2\pi(p_\theta - p_0)$ where p_θ is the canonical angular momentum and p_0 the mean value of p_θ for the beam. The transverse motion of particles is considered only insofar as it contributes to the transverse dimensions of the beam and to the relation between the circulation frequency of particles and their canonical angular momentum.

The particle-distribution function $\psi(W,\theta,t)$ satisfies the one-dimensional equation[5]

$$\frac{\partial\psi}{\partial t} + \dot{\theta}\,\frac{\partial\psi}{\partial\theta} + 2\pi e\,\langle RE_\theta\rangle\,\frac{\partial\psi}{\partial W} = 0 \quad . \tag{3.1}$$

The quantity $\langle RE_\theta\rangle$ is evaluated in Sec. II. The unperturbed beam is uniform in azimuth and constant in time so it may be described by a distribution function $\psi_0(W)$. We consider an infinitesimal perturbation that allows us to write the distribution function as

$$\psi(W,\theta,t) = \psi_0(W) + \psi_1(W)e^{i(n\theta-\omega t)} \quad . \tag{3.2}$$

Inserting Eq. (3.2) into Eq. (3.1) and linearizing, we obtain

$$\psi_1(W)e^{i(n\theta-\omega t)} = -\frac{2\pi ie\langle RE_\theta\rangle}{(\omega - n\dot{\theta})}\,\frac{d\psi_0}{dW} \quad . \tag{3.3}$$

The function ψ_0 is normalized so that the total number of particles in the accelerator N is given by

$$N = 2\pi R \int \psi_0(W)dW \quad , \tag{3.4}$$

but it will be convenient in what follows to define a function

$$f_0(W) \equiv 2\pi R \psi_0(W)/N \quad .$$

The perturbed charge density per unit length λ_1 is found from

$$\lambda_1 = e \int \psi_1(W)dW \quad . \tag{3.5}$$

Combining Eqs. (3.3) and (3.5) yields

$$\lambda_1 e^{i(n\theta - \omega t)} = -2\pi i e^2 \langle RE_\theta \rangle \int \frac{d\psi_0}{dW} \frac{dW}{(\omega - n\dot{\theta})} \quad , \tag{3.6}$$

in which we must insert the appropriate expression for $\langle RE_\theta \rangle$ from Sec. II. The dispersion relation may be written in the form

$$-1 = (U - iV)I \quad , \tag{3.7}$$

with I defined by

$$I = \int \frac{df_0}{dW} \frac{dW}{(\omega - n\dot{\theta})} \quad . \tag{3.8}$$

The definitions of U and V in Eq. (3.7) depend upon which expression for $\langle RE_\theta \rangle$ is used in Eq. (3.6). If Eq. (2.10b) is used, we have

$$U = Ne^2(n/R)(1 - \beta_w^{\ 2})[1 + 2\,\ell n\,(b/a)] \quad , \tag{3.9a}$$

$$V = 2Ne^2 R\beta_w/b \quad . \tag{3.9b}$$

If Eq. (2.22) is employed, the definitions are

$$U = (4\pi Ne^2/w) \sum_s \sigma_s^2 \frac{n}{\nu R} (1 - \beta_w^2) \tanh (\nu h/2) \quad , \tag{3.10a}$$

$$V = (4\pi Ne^2/w)\mathcal{R}\sum_s \sigma_s^2 \beta_w \operatorname{sech}^2 (\nu h/2) \quad . \tag{3.10b}$$

By the definitions, Eqs. (2.24a) and (2.24b), the latter definitions of U and V may be written

$$U = (4\pi Ne^2/w) \operatorname{Relong} \quad , \tag{3.11a}$$

$$V = (4\pi Ne^2\mathcal{R}/w) \operatorname{Imlong} \quad . \tag{3.11b}$$

Although U and V are functions of ω through $\beta_w = \omega/kc$, we shall see below that values of ω near $n\omega_0$ are of interest. It is therefore a good approximation (provided the particles are not extremely relativistic) to replace β_w by $\beta = v/c$, where $v = \omega_0 R$ is the mean velocity of particles in the beam and ω_0 is the mean angular frequency. This simplification is strictly true at the stability limit of the negative-mass instability, where $\omega = n\omega_0$ is a solution to the dispersion equation. There is a further dependence of V on ω through $\mathcal{R} = (\omega/8\pi\sigma)^{1/2}$. This is a weak dependence, and we shall replace ω by $n\omega_0$, thus rendering U and V independent of ω. The quantities U and V are positive, and for all cases in which we have evaluated them $\mathcal{R}$ is so small that $V \ll U$.

IV. ANALYSIS OF THE DISPERSION RELATION

A. Instability in Absence of Damping

In order to demonstrate the resistive instability we first choose $f_0(W) = \delta(W)$, which represents a beam with all particles having the same canonical angular momentum. Since we are concerned only with small deviations in W we may write

$$\dot{\theta} = \omega_0 + k_0 W \quad , \tag{4.1}$$

where ω_0 is 2π times the average value of the particles' circulation frequency f. The quantity k_0 reflects the characteristics of the accelerator guide field, and is related to f by

$$k_0 = 2\pi f(df/dE) \quad , \tag{4.2}$$

where E is the particle energy. Below the transition energy df/dE is positive, and above the transition energy df/dE is negative. The latter is the regime of "negative mass."

From Eqs. (3.7) and (3.8) we obtain

$$(\omega - n\omega_0)^2 = nk_0(U - iV) \quad . \tag{4.3}$$

If $k_0 < 0$, then even for $V = 0$ (i.e., no resistivity considered) Eq. (4.3) exhibits an instability, namely the negative-mass instability. In this regime we need not consider the effect of V since V is always very small compared to U. For $k_0 > 0$ we obtain from Eq. (4.3)

$$\omega = n\omega_0 \pm \sqrt{nk_0U}\left(1 - i\,\frac{V}{2U}\right) \quad , \tag{4.4}$$

where the positive sign corresponds to a "fast wave" in which the wave phase velocity β_w is greater than the particle velocity β and the perturbation is damped.[1,2] The minus sign corresponds to a "slow wave" that grows exponentially with an e-folding time τ_0 given by

$$\tau_0 = (2/V)(U/nk_0)^{1/2} \quad . \tag{4.5}$$

This formula may be evaluated with Eqs. (3.9) used in the circular-geometry model. We further employ the approximation $\beta_w = \beta$ with the result

$$\tau_0 = \frac{b}{\beta\gamma\mathcal{R}}\left[\frac{1 + 2\,\ln\,(b/a)}{2\pi R\,Ne^2 f(df/dE)}\right]^{1/2} \quad . \tag{4.6}$$

The e-folding time depends upon the conductivity σ as $\sigma^{1/2}$, and upon the number of particles as $N^{-1/2}$. The dependence of τ_0 upon n is correct only for values of n such that Eq. (2.2) is satisfied. It is a weak dependence, $n^{-1/2}$, which enters through $\mathcal{R}$. The general dependence of τ_0 upon n must be obtained from Eqs. (4.5) and (3.10).

B. Criterion for Stability

A stability criterion will automatically emerge from the dispersion relation if we use a function $f_0(W)$ that describes a frequency spread in the unperturbed beam. This is simply the well-known phenomenon of Landau damping. The analysis is complicated by the fact that $V \ll U$, which means that the growth rate is very small and easily damped by particles riding at the wave velocity β_w. On

the other hand, the wave velocity is shifted from β by the (relatively) large term $(nk_0U)^{1/2}$, with the result that the damping is sensitive to the particle distribution at frequencies removed from the central frequency ω_0. In illustration, consider the Lorentz, or resonance, line shape for $f_0(W)$:

$$f_0(W) = \frac{\delta}{\pi(W^2 + \delta^2)} \quad , \tag{4.7}$$

where δ is a measure of the spread in W and hence of the frequency spread in the beam. Equation (3.7) may be integrated readily with the result

$$\omega = n\omega_0 \pm \sqrt{nk_0U}\left(1 - i\,\frac{V}{2U}\right) - ink_0\delta \quad , \tag{4.8}$$

where Eq. (4.1) has been employed and V is assumed to be much smaller than U. The slow-wave instability is damped out if

$$nk_0\delta > \frac{1}{\tau_0} \quad ; \tag{4.9}$$

this condition is much less stringent than the correct result derived below. The criterion [Eq. (4.9)] has resulted from the very large tail of the Lorentz line.

To consider other functions, we first write the dispersion relation in the form

$$\frac{nk_0(U + iV)}{(U^2 + V^2)} = \int \frac{df_0}{dW}\,\frac{dW}{(W - W_1)} \quad , \tag{4.10}$$

where $W_1 = (\omega - n\omega_0)/nk_0$. Consider now a Gaussian distribution in W, with

$$f_0(W) = \frac{1}{\delta\sqrt{\pi}} \exp^{(-W^2/\delta^2)} \quad . \tag{4.11}$$

A partial integration and a change of variable from W to $W/\delta \equiv \xi$ puts Eq. (4.10) into the form

$$\frac{nk_0\delta^2(U + iV)}{(U^2 + V^2)} = \frac{1}{\sqrt{\pi}}\int_{-\infty}^{\infty} \frac{\exp(-\xi^2)d\xi}{(\xi - \xi_1)^2} \equiv \mathcal{Z}'(\xi_1) \quad . \tag{4.12}$$

The function $\mathcal{Z}'(\xi_1)$ has been investigated numerically by Fried,[10] but asymptotic expressions will suffice here. The stability criterion is found by considering real $\xi_1 = (\omega - n\omega_0)/nk_0\delta$. Since $U >> V$, we must have Re $\mathcal{Z}'$ >> Im $\mathcal{Z}'$. This occurs in the limit of large ξ_1, where the expansion

$$\mathcal{Z}'(\xi_1) \simeq -2i\xi_1\sqrt{\pi}\ \exp(-\xi_1^2) + \frac{1}{\xi_1^2} \tag{4.13}$$

is a good approximation. From Eqs. (4.12) and (4.13) we know at once that

$$\xi_1^2 \equiv \frac{W_1^2}{\delta^2} = \frac{U^2 + V^2}{nk_0\delta^2 U} \quad , \tag{4.14}$$

or, to good approximation,

$$W_1 = -(U/nk_0)^{1/2} \quad . \tag{4.15}$$

The corresponding frequency shift $\omega - n\omega_0$ is thus $k_0 n W_1$, or the same as obtained for the two other choices of $f_0(W)$ in Eqs. (4.4) and (4.8).

However, the stability criterion found from the Gaussian distribution differs drastically from Eq. (4.9). The value of δ necessary for stability is found by solving the transcendental equation

$$\xi_1^{\,3} \exp(-\xi_1^{\,2}) = -V/2U\sqrt{\pi}, \tag{4.16}$$

where we have used Eq. (4.14) in the right-hand side of Eq. (4.12). We will not pursue this criterion further, but merely note that the value of δ necessary for stability depends <u>logarithmically</u> on V, not directly as in Eq. (4.9). For numerical computations Eq. (4.16) can prove extremely useful.

Consider now a distribution function $f_0(W)$, which has nonzero values for only a finite range of W. It is easy to see that for such a (physically realistic) function it is impossible to satisfy the dispersion relation with <u>real ω</u> if W_1 lies outside the range in which f_0 is nonzero. This can be seen by writing Eq. (4.10) in the form

$$\frac{nk_0}{U^2}(U + iV) = \mathcal{P}\int \frac{df_0}{dW}\frac{dW}{(W - W_1)} + i\pi \left.\frac{df_0}{dW}\right|_{W=W_1} , \tag{4.17}$$

where $\mathcal{P}$ indicates the Cauchy principle value. The equation cannot be satisfied by a real value of W_1 if $(df_0/dW)|_{W=W_1}$ is zero. Furthermore, it can be shown that any W_1 having a real part outside the range of nonzero $f_0(W)$ has an imaginary part with a sign corresponding to an instability. The value of Re W_1 has been seen to be insensitive to the form of $f_0(W)$, so we can deduce a necessary condition for stability, namely the range of $f_0(W)$ must include W_1. Because V is so small compared to U, this necessary condition is a very good approximation to a sufficient condition. Quantitatively we have the frequency spread in the beam $\Delta\omega_s \approx 2k_0\delta$, and so

$$n\Delta\omega_s > 2(nk_0U)^{1/2} \tag{4.18}$$

is the condition for stability. Evaluating this for a vacuum tank of circular cross section, we have from Eqs. (3.9a):

$$\Delta\omega_s > 2\left[\frac{2\pi(f\ df/dE)Ne^2}{R\gamma^2}\ [1 + 2\ \ell n(b/a)]\right]^{1/2} . \tag{4.19}$$

This result is algebraically just the criterion for suppression of the negative-mass instability (but there, of course, df/dE is negative and its absolute value appears in the formula).[4] This last result has the geometric factor appropriate to the circular geometry, and is independent of n. We must remember however, that Eq. (4.19) is valid only for $n \ll \gamma R/b$. The more general case can be handled with Eqs. (4.18) and (3.10a). The stability criterion is independent of the surface resistivity σ in this limit of highly conducting surfaces.

Equation (4.19) may impose more severe design requirements on a high-intensity accelerator than those necessary to circumvent the negative-mass instability. This is because the negative-mass instability is possible only if the energy is above the transition energy where $|df/dE|$ is usually small and γ may be large. But Eq. (4.19) must be applied near injection in an AGS. The absence of any observed effect in present-generation machines--in contrast to the observed negative-mass instability in Saturne, the Cosmotron, and the Bevatron[7]--must be laid to the rather large energy spread from the linac injectors.

V. NUMERICAL EXAMPLE

As a numerical example we take the MURA 40-MeV electron accelerator with parameters as listed in Tables I and II. We assume the conductivity of the walls to be that of aluminum, namely $\sigma = (3 \times 10^{17})\ \mathrm{sec}^{-1}$. Table III shows the results of numerical calculations for U and V, as well as a comparison with the analytic formulas of Eqs. (3.9). The agreement in the values of V is seen to be excellent, although the geometry is remote from a circular situation and n is not much less than $\gamma R/b$. Table IV gives results for the growth time in the absence of frequency spread τ_0, and for the frequency spread $\Delta\omega_s$ required for stability. In Table V, N is taken at two values bracketing the experimental range and $\Delta\omega_s$ is expressed in terms of a requisite energy spread ΔE_s on the assumption that the frequency spread is caused solely by an energy spread. The numbers are in semiquantitative agreement with observation, with the ΔE_s being closer to observations than the τ_0.[6] The growth time τ_0 is a function of the resistivity of the walls and could be considerably reduced if the effective resistivity of the walls were higher than the nominal value (for aluminum) used in these theoretical calculations.

ACKNOWLEDGMENTS

The authors wish to thank Mr. Ed Rowe, Dr. Cy Curtis, and Dr. Fred Mills of MURA for stimulating discussion as well as detailed descriptions of their experimental results. They are indebted to Mrs. Barbara Steinberg of the Lawrence Radiation Laboratory for assistance with numerical computations.

Table I. Geometrical parameters that are employed in the numerical example and that approximate conditions in the MURA 40-MeV electron accelerator. The dimensions are defined in Fig. 2.

Case	n	R (cm)	h (cm)	w (cm)	x_0 (cm)	Δ (cm)
A	1	125	5.4	100	15	1.0
B	10	125	5.4	100	15	1.0
C	10	140	5.4	100	30	1.0
D	10	140	5.4	100	30	2.0

Table II. Beam parameters employed in the numerical example. The quantity κ corresponds to a field-index parameter of 9.3.

Case	β	γ	ω_0(cm/sec)	$\kappa \equiv \frac{E}{f}\frac{df}{dE}$	k_0(sec^{-2} erg^{-1})
A	0.5528	1.2	1.33×10^8	1.96	0.575×10^{22}
B	0.5528	1.2	1.33×10^8	1.96	0.575×10^{22}
C	0.8660	2.0	1.86×10^8	2.04	0.702×10^{22}
D	0.8660	2.0	1.86×10^8	2.04	0.702×10^{22}

Table III. Values of the quantities U and V, as defined in Eq. (3.9). The conductivity, in this example, is taken to be that of aluminum; namely, $\sigma = 3 \times 10^{17}\ \mathrm{sec}^{-1}$. In the evaluation of Eq. (3.9a), b has been taken as h/2 and a as $\Delta/2$. It can be seen that the analytic formula is an exceedingly good approximation--in this example, at least--to the numerical computations.

	Employing Eq. (3.9a)		Employing Eq. (3.10a)	
Case	$\frac{U}{N} \times 10^{20}$(ergs)	$\frac{V}{N} \times 10^{26}$(ergs)	$\frac{U}{N} \times 10^{20}$(ergs)	$\frac{V}{N} \times 10^{26}$(ergs)
A	0.561	39.6	0.774	39.5
B	5.61	125	7.69	121
C	2.02	232	2.47	229
D	1.38	232	1.91	226

Table IV. Growth time and frequency spreads required for stability in the numerical example. The quantity τ_0 is computed with Eq. (4.5), whereas $\Delta\omega_s$ is evaluated with Eq. (4.19); in both cases the last two columns of Table III are used. The quantity ΔE_s is the energy spread in the beam required to give the frequency spread $\Delta\omega_s$ (and hence stability), under the assumption that the frequency spread arises solely from energy spread.

Case	$N^{1/2}\ \tau_0$ (sec)	$\frac{\Delta\omega_s}{N^{1/2}}$ (sec^{-1})	$\frac{\Delta E_s}{N^{1/2}} \times 10^6$ (kV)
A	5.9×10^3	13.5	30
B	1.9×10^3	13.0	30
C	5.2×10^2	8.4	22
D	4.7×10^2	7.4	19

Table V. Growth times in the absence of energy spread, and energy spread required for stability for two different values of the total number of particles in an example approximating conditions in the MURA 40-MeV-electron accelerator.

Case	$N = 10^8$		$N = 10^{10}$	
	τ_0 (msec)	ΔE_s (kV)	τ_0 (msec)	ΔE_s (kV)
A	590	0.3	59	3.0
B	190	0.3	19	3.0
C	52	0.22	5.2	2.2
D	47	0.19	4.7	1.9

FOOTNOTE AND REFERENCES

* Research supported by the U.S. Atomic Energy Commission

1. J. R. Pierce, Bell System Tech. J. 30, 626 (1951).

2. C. K. Birdsall and J. R. Whinnery, J. Appl. Phys. 24, 314 (1953).

3. A. A. Kolomensky and A. N. Lebedev, Proccedings of the International Conference on High Energy Accelerators and Instrumentation, Geneva, 1959 (CERN, Geneva, 1959), p. 115.

4. C. E. Nielson, A. M. Sessler, and K. R. Symon, Proceedings of the International Converence on High Energy Accelerators and Instrumentation, Geneva, 1959 (CERN, Geneva, 1959), p. 239.

5. L. J. Laslett, V. K. Neil, and A. M. Sessler, Rev. Sci. Instr. 32, 276 (1961).

6. C. D. Curtis, et al., Proceedings of the International Conferences on High Energy Particle Accelerators, Dubna, 1963 (Atomizdat, Moscow, 1964), p. 620.

7. H. Bruck et al., Proceedings of the International Conference on High Energy Accelerators, Brookhaven National Laboratory, 1961 (Brookhaven National Laboratory, Upton, N.Y., 1961) p. 175;
M. Q. Barton and C. E. Nielsen, Proceedings of the International Conference on High Energy Accelerators, Brookhaven National Laboratory, 1961 (Brookhaven National Laboratory, Upton, N. Y., 1961) p. 163;
M. Q. Barton, Coherent Effects in the Cosmotron, Abstract of paper presented at the International Conference on High Energy Accelerators, Dubna, U.S.S.R., 1963 (unpublished);

G. R. Lambertson, High Intensity Phenomena at the Bevatron, Abstract of paper presented at the International Conference on High Energy Accelerators, Dubna, U.S.S.R. (unpublished).

8. L. Jackson Laslett, V. Kelvin Neil, and Andrew M. Sessler, Transverse Resistive Instabilities of Intense Coasting Beams in Particle Accelerators, Lawrence Radiation Laboratory Report UCRL-11090 (Rev.), 1964 (unpublished), submitted to Rev. Sci. Instr.

9. IBM 7094 FORTRAN program MESS, Computer Center Lawrence Radiation Laboratory, University of California, Berkeley, 1963 (unpublished).

10. B. D. Fried and S. D. Conte, The Plasma Disperson Function, (Academic Press, N.Y., 1961).

Fig. 1 Geometry of beam and tank of circular cross section.

Fig. 2 Geometry of beam and tank of rectangular cross section.

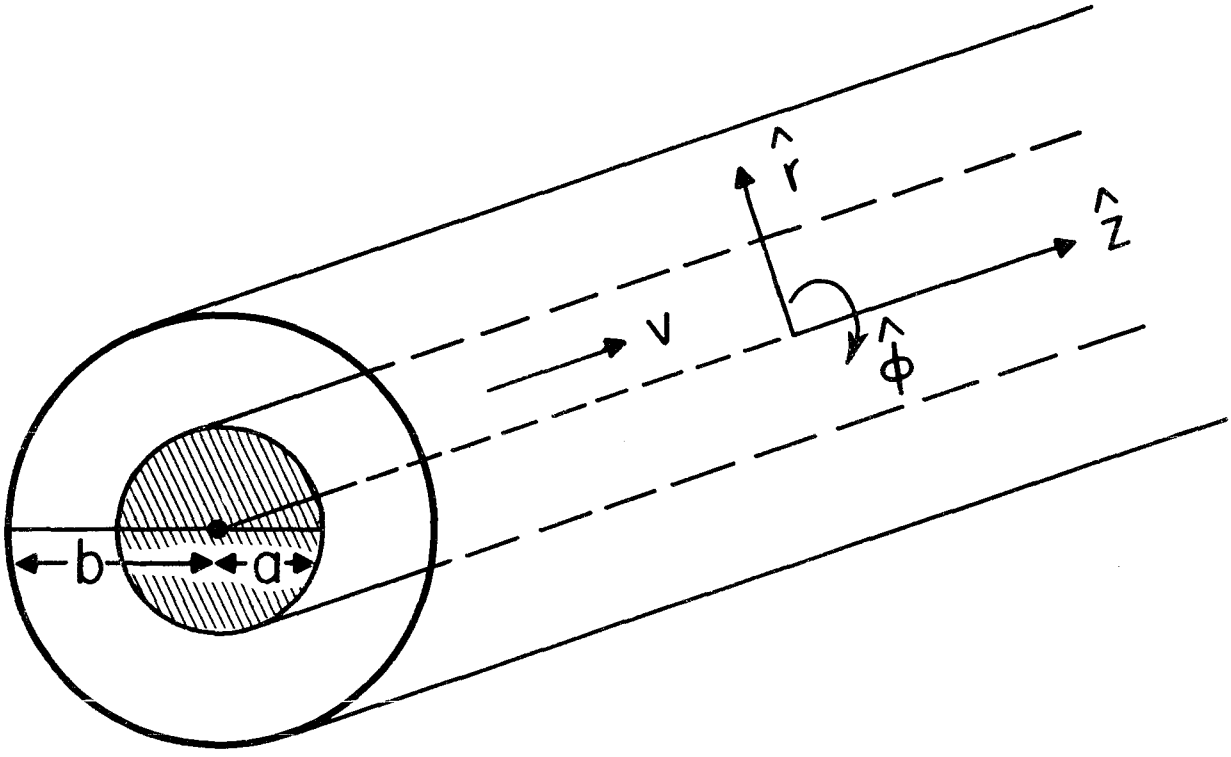

MUB-4311

Fig. 1

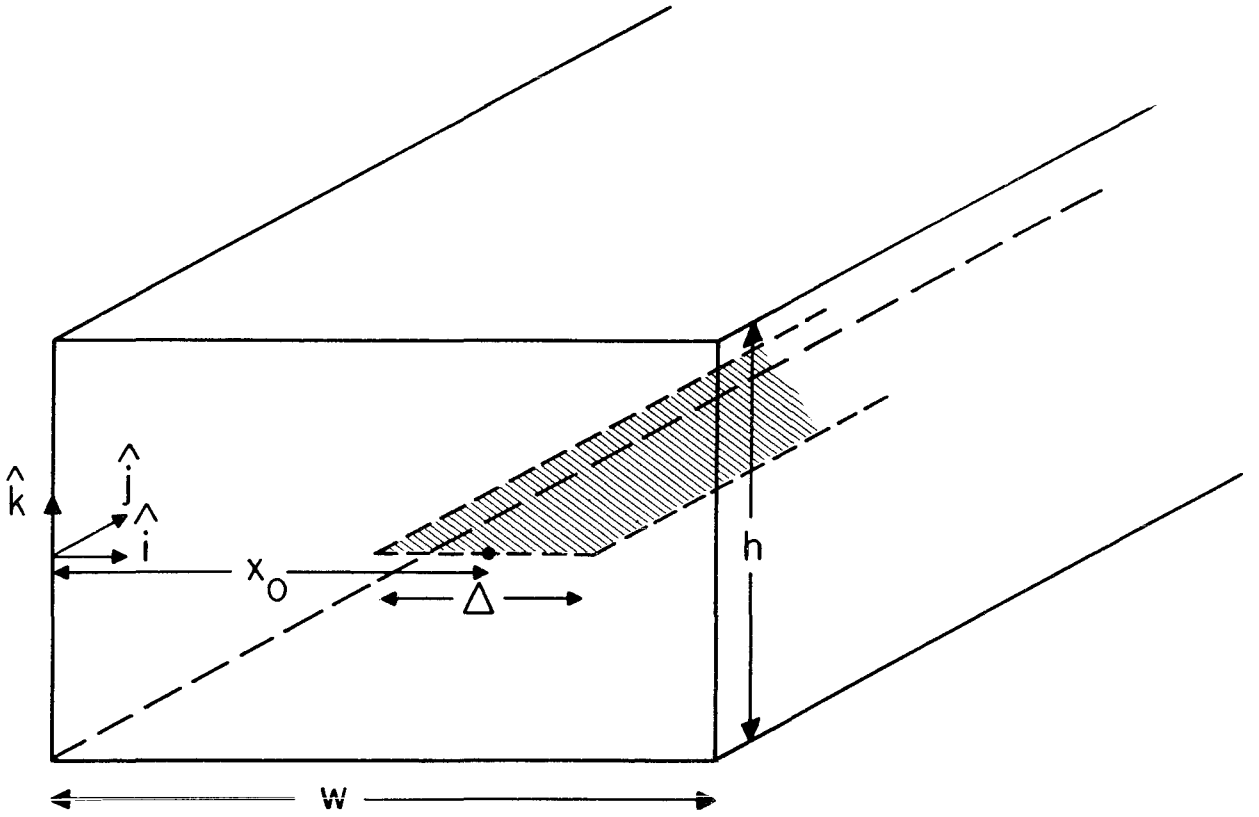

MUB-4312

Fig. 2

This report was prepared as an account of Government sponsored work. Neither the United States, nor the Commission, nor any person acting on behalf of the Commission:

A. Makes any warranty or representation, expressed or implied, with respect to the accuracy, completeness, or usefulness of the information contained in this report, or that the use of any information, apparatus, method, or process disclosed in this report may not infringe privately owned rights; or

B. Assumes any liabilities with respect to the use of, or for damages resulting from the use of any information, apparatus, method, or process disclosed in this report.

As used in the above, "person acting on behalf of the Commission" includes any employee or contractor of the Commission, or employee of such contractor, to the extent that such employee or contractor of the Commission, or employee of such contractor prepares, disseminates, or provides access to, any information pursuant to his employment or contract with the Commission, or his employment with such contractor.