International Journal of Engineering & Technology, 9 (4) (2020) 881-886

International Journal of Engineering & Technology

Website: www.sciencepubco.com/index.php/IJET

Research paper

Material comparison of dynamic cornering fatigue test (iso3006) for automotive wheel rim

Faramarz Bagherzadeh [1] *, Sundeep Murugesan [1], Priyam Deka [1]

[1] Gdansk University of Technology of Poland Narutowicza 11/12, Wrzeszcz,Gdansk, Poland
**Corresponding author E-mail: mr.bagherzade@gmail.com*

Abstract

With the technological advancement in the automotive sector, the vehicles are crossing their limits in every aspect. Hence, the subsequent improvement related to the wheel and braking of the vehicle is very crucial as the wheel carries the whole weight of the vehicle in dynamic and harsh environmental conditions. ISO-3006 is a comprehensive test for wheel standardization, and the dynamic cornering fatigue test is a part of this standard. This test investigates the wheel fatigue under bending torque. When a car turns, the bending moment is applied to the wheel via drive axle. In this paper, we investigate the test on a designed wheel with five different materials via ANSYS software. As the wheel weight has a direct impact on vehicle performance, selecting lighter materials is extremely important. The result of this research indi-cates the area of maximum fatigue stresses, and also it provides a comparison between five popular materials for the wheel rim con-sidering the fatigue life and weight of the wheel. Finally, it is shown that carbon fiber reinforced plastic (CFRP) has the most fatigue strength con-cerning its lightweight.

Keywords: *Cornering Fatigue; CFRP; Fatigue Life; Wheel Rim.*

1. Introduction

The wheel is one of the basic parts of a vehicle which should always meet the exact necessities of driving wellbeing. Wheel mass and inertia strongly affect vehicle performance thus minimizing the weight are vital. Wheels can be produced using different types of materials such as commercial-grade hot-rolled steel, aluminum alloys, titanium alloys, magnesium alloys, and composites. Besides a stylish look of a wheel, utilizing light-weight materials is necessary. It is the key factor for decreasing the fuel consumption of the vehicle. However, the designers need to be sure the new light material can endure unpleasant environmental and rough loading conditions to satisfy the international standards [1], [2].

On the other hand, while selecting the material, engineers should consider the manufacturability and production efficiency of the chosen material. Recently, new techniques are invented to help the automotive industry to benefit from composite materials. Nowadays, many composite materials are commercially available and used by automotive manufacturers. As steel and aluminum wheels have almost reached the maximum level of optimization, achieving more effective designs is only possible through employing lighter materials. Carbon fiber reinforced plastic (CFRP) is one of the most popular composites for wheel rim production [3].

Although producing, testing, and monitoring the prototype is costly, it guarantees the product safety. To minimize the number of experiments, the finite element method (FEM) is likely to be used. Among all available data-driven from FEM analysis, computer programs (for example a neural network) can select the best possible design [4]. Similarly, Pang [5] calculated bending and radial fatigue cycles for their wheel rim model, then they established a multi-object optimization via genetic algorithms. The outcome was more than a 13% weight reduction in the aluminum wheel rim.

Wheel testing definition and criteria vary between countries, and It mostly depends on the conventional standardization system of the manufacturer. Among all, radial fatigue tests, cornering (bending) fatigue tests, impact tests, and rigidity tests are often preferable.

Optimization of wheel profile and shape is demanded in the automotive industry. Linghu [6], used Brown-Miller biaxial fatigue theory in Abaqus software to optimize the 3D model of a truck wheel (steel) concerning bending/radial fatigue life.

Zheng [7], performed a rigidity test based on QC/T 258-1998 on a steel wheel. A pulling force (time depended) is applied via bolts to the wheel rim, and the output result is maximum displacement. The experimental results show that FEM analysis had less than 20% error.

Recently, Gao [8] investigated a new type of impact test in 90° of steel wheel that has enormous effects on the reliability and safety of automobiles while encountering harsh road conditions. Although there was less than a 30% error between software analysis and experiment results, the proposed method can increase the efficiency of the company. In a similar manner, Xiaofei [9] explored a 13° impact test for an automotive wheel with a tire. They proposed a method to describe the complexity of tire to decrease analysis uncertainty. The relative comparison of deformation suggests less than a 5% error in simulation results.

Meng [10], developed a method to indicate the influence of the stamping process (changing of thickness and strain hardening) on fatigue life. They used the data-mapping method to convey forming operation simulation data and dynamic loading analysis. After experimenting they observed a significant alignment between FEM results and experiment result.

Bending fatigue simulation requires more complicated models in the case of anisotropic composite materials. Chai [11] believes ignoring the internal structure of composites may cause extreme engineering mistakes, thus they employed a method for mesh integration (donor mesh and fiber orientation tensors) to simulate long glass fiber reinforced (LGFT). The comparison between FEM and the experiment points out that simulation with the anisotropic method is 36% closer to reality than simplified isotropic models.

Recent developments in wheel manufacturing methods with CFRP are significant. G. Rapids [12] invented a new way of assembly of the automotive wheel made of CFRP that increases the stiffness and strength of the wheel up to 16%. In the same year, Friske [13] devised wheels with innovative spokes that are produced via CFRP. The new spokes are sharp with wing-like extensions or alternatively with H-beam and I-beam cross-sections. This design improved integrity and interchangeability in the event of fault and damage. The new enhancements are upgrading the wheel construction methods with lower prices, thus the demand for composite wheels is likely to increase soon.
Although many research works have been done in the field of wheel rim analysis, optimization and testing, a comparative analysis between different materials (including CFRP) on an individual model were not performed yet, thus we decided to implement a set of analysis according to previous literature on our model to compare various materials and specifically CFRP.

2. Materials

In this article, different materials are compared and analyzed by ANSYS software. They are selected concerning conventional materials that are used for the wheel rim production by world-known brands. The following materials are selected:

- CFRP
- Mg-AZ31B
- Al 6061
- Ti-6Al-4V
- SAPH 440

Carbon fibre reinforced plastic (CFRP) shows the least density when compared with any other material with superior fatigue strength [3]. For the CFRP T300 material, the mechanical properties and S-n curve are obtained from [14], [15].
Magnesium alloy (Mg-AZ31B), despite its low density, has high fatigue and strength properties consequently it implies less deformation in comparison to other materials. Mechanical and fatigue properties are obtained from [16], [17].
Aluminium alloys are mainly used for producing the wheel rim in middle and high-class cars. Aluminum 6061 is selected for its relatively low cost and proper performance [1], [17].
Titanium alloy is used for producing wheel rim and other automotive parts due to its extremely high strength and fatigue life. Ti-6Al-4V is selected as they are used in the production of the wheel rim in luxurious cars [17], [18].
The hot-rolled SAPH 440 steel is used in many low and medium-class cars due to their cheap price and ease of manufacturing where car performance in a critical situation is not very important [7], [19].
For the clarity of the article, in the following section (Fig.1), all S-n curves that are collected from the references are demonstrated in one figure.

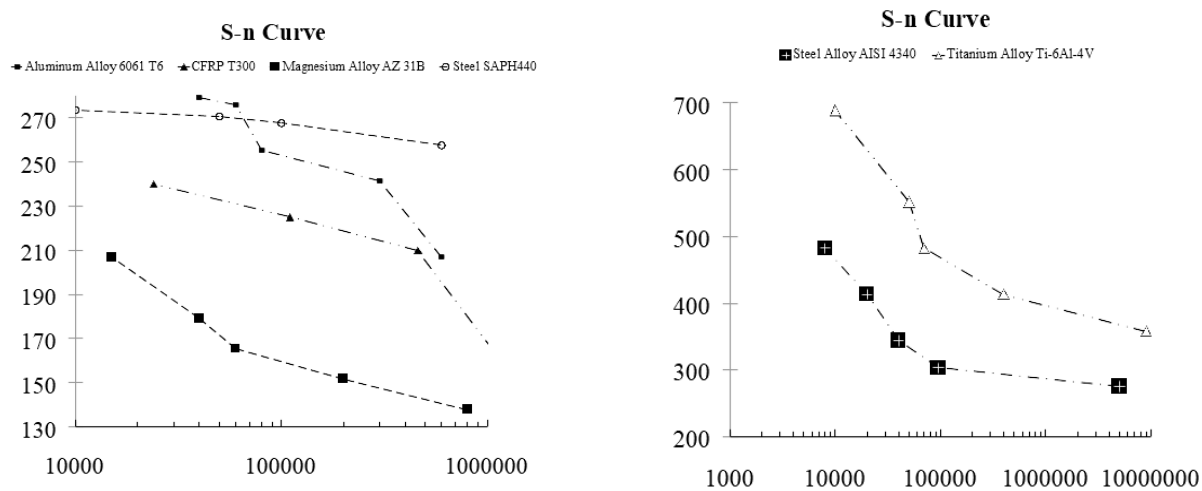

Fig. 1: S-N Curve of Selected Materials.

3. Dynamic cornering fatigue test (ISO-3006)

As the wheel is one of the vital parts of a vehicle, and it ensures safety, it must be tested under specific terms and conditions. In this field, ISO published a reliable method to unify the producers around the world for obtaining the required level of the wheel quality. Following the standardization system leads to stable and constant results, so customers can rely on the products, which satisfied the standard conditions, and have a certification.
Considering an automotive is moving on the road, radial forces are acting on the wheel, caused by the weight of the vehicle. If the car makes a turn, a considerable bending moment will be applied to the wheel by the drive axle. Despite radial forces, bending stresses are acting when the vehicle is cornering or turning around. Simultaneously, the wheel is rotating, thus the bending moment can cause fatigue.

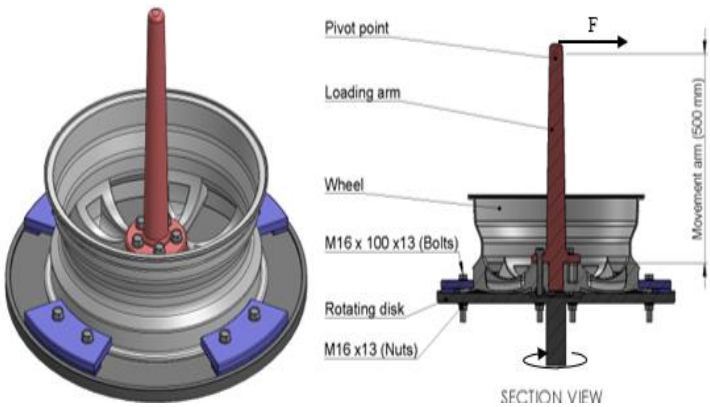

Fig. 2: Assembly Drawing for Dynamic Cornering Fatigue Test Based on ISO-3006.

ISO-3006 is designed to simulate the fatigue failure of life in a similar situation. A fresh wheel is mounted on the rotating disk via studs, bolts, and nuts (Fig.2). A shaft (loading arm) is joint to the wheel hub via bolts and force F_v is applied to the shaft at the pivot point to produce a bending moment on the wheel rim. After loading the shaft, the disk begins to rotate and a sensor counts the cycles. The test will terminate if any crack appears on the wheel or the wheel won't be able to sustain the load [20].
The Eq.1 indicates the bending moment (M) which is calculated by force and moment arm multiplication

$$M = (\mu.R+d)\ F_{v.}S \tag{1}$$

Where,
μ - coefficient of friction developed between tire and road;
R - static loaded radius of the largest tire to be used for the wheel as specified by wheel manufacture;
d - inset or outset of the wheel (plus for inset or minus for outset);
F_v - maximum vertical static load on the wheel;
S - accelerated test factor.
As the material characteristics are different between each set of simulations, we performed an analysis in a range of moments that produce results between immediate failure and life more than 10e6 (safe life). The calculation is performed on the maximum moment which is derived through ISO-3006 (Eq.1) (Table 1).

Table 1: The Maximum Moment Obtained by ISO-3006

F_v (N)	μ	R (m)	D (m)	S	M_{Max} (N.m)
				0.8	2344.2
				1	2930.2
				1.2	3516.3
				1.4	4102.35
				1.6	4688.4
				1.8	5274.5
				2	5860.5
10104.3	0.7	0.35	0.045	2.05	6000
				2.13	6241.5
				2.4	7032.6
				2.6	7618.6
				2.8	8204.7
				3	8790.7
				3.2	9376.8
				3.4	9962.8

4. Simulation

At first, the wheel is modeled in SolidWorks 2012 based on standards of wheel design and available tiers in the market considering previous research works [21 - 24]. The wheel standard code is 215/45 R20 109V, and the inner dimensions are considered similar to previous research works [16], [17], then it is transferred to Ansys 19 in form of a STEP file. Next, all the materials and their S-n curves are introduced to the Ansys material library. Then, a smooth dense mesh with high quality is applied to the model (Fig.3). The total amount of elements exceeds 375 k to ensure the quality of results. According to the ISO-3006 [20] test circumstances, the bottom of the wheel is fixed to the rotating plate, and the maximum bending moment is applied to the bolt holes (distributed equally) (Fig.3). During the fatigue analysis, we considered Goodman theory and fully reversed constant amplitude load with 1.5 scale factors to consider unexpected environmental harsh situations.

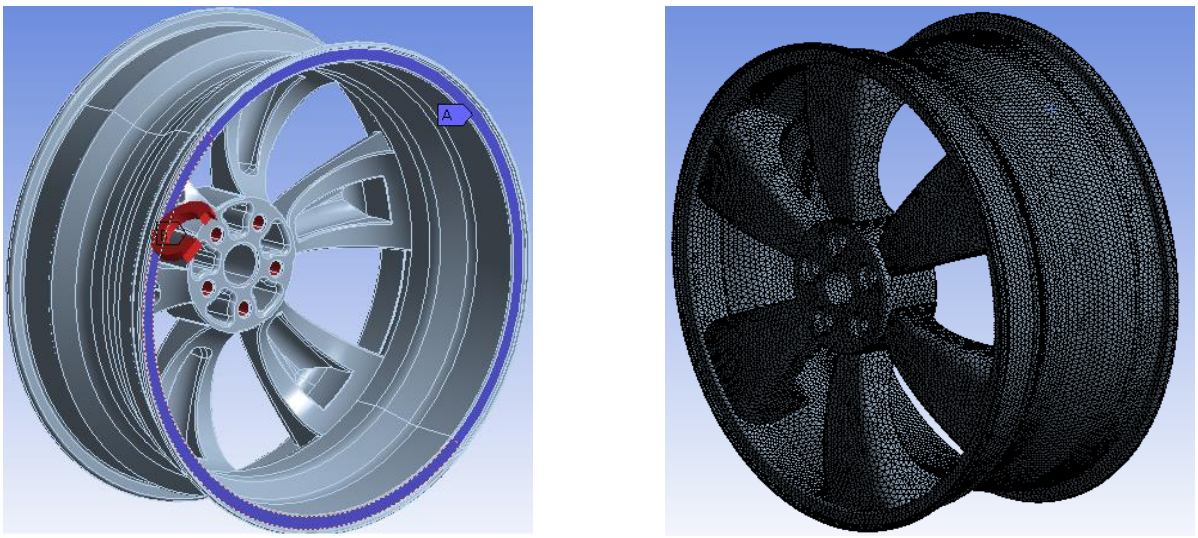

Fig. 3: The Model: A) Initial Loading B) Mesh.

As it was expected maximum deformation is happening on the spoke joint inner side area, due to the shape of the wheel and highest distance from fixtures. The maximum stress is placed on the inner part, where we designed slots to make the wheel lighter. As the amount of stress and deformation varies from one material to another, they are not shown in the figures, also this article is focused on fatigue life.

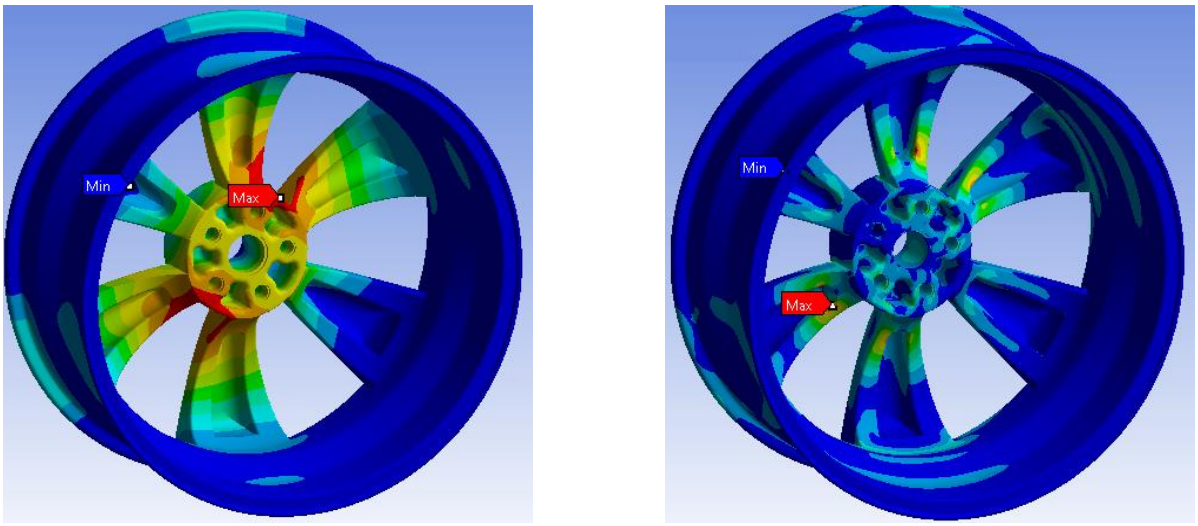

Fig. 4: Static Results: A) Deformation B) Von-Misses Stress.

The highest Fatigue occurs near the spoke and hub joining area and on the slot edges of the inner surface of the wheel (Fig.5). Although the simulation is simplified to an isotropic model without considering manufacturing effects, as mentioned in the introduction, simplified simulation error was reported to less than 30% by the researchers.

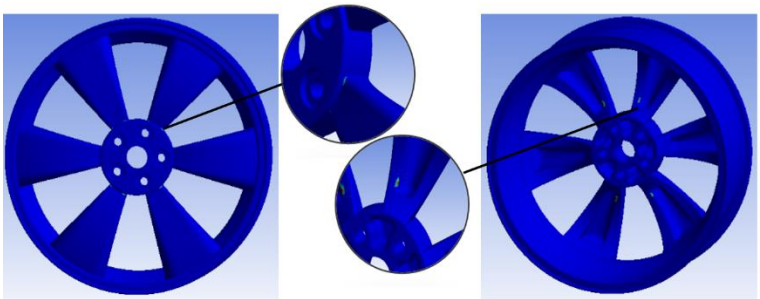

Fig. 5: The Minimum Fatigue Life Area.

The simulation results are presented for a range of critical moments for mentioned materials (Fig.6) which is obtained concerning ISO-3006 loads and preferences (Table1). Each point of this figure represents the minimum fatigue life cycles of the wheel under a specific moment for the considered material. We performed the analysis for several other points, but they are not indicated in the figure, because the results were either the infinite life (10e6) or immediate failure.

Considering Fig.6, we can observe titanium alloy is able to sustain under extremely high moments and Mg-AZ31B can endure a lower range of torques. The safe moment for CFRP is lower than steel alloy and aluminum alloy, but CFRP is considerably lighter.

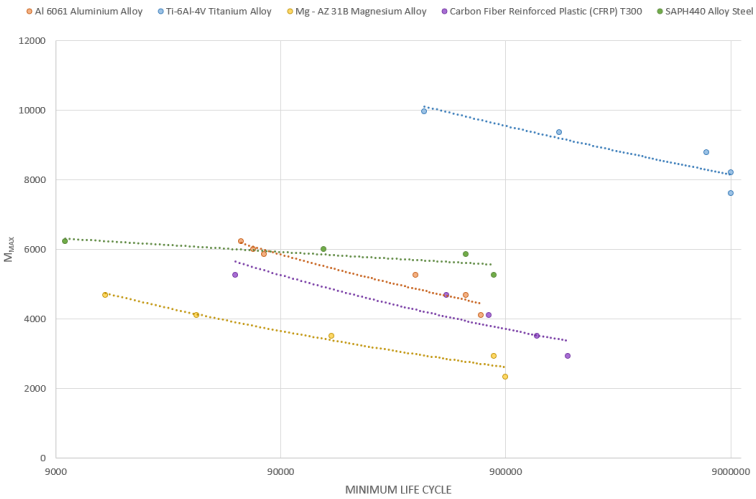

Fig. 6: The Minimum Life Cycle for Each Moment.

Fatigue strength is a vital factor, but it comes with a price which is the wheel weight. If we point at failure moment for all materials at 9e5 cycles, the weight of the wheel can be compared between materials (Fig.7). Steel alloy is the heaviest material in this list. Mg and CFRP are reasonably lighter than others. CFRP is almost 40% lighter than aluminum alloy, and it is more than 4 times lighter than steel alloy.

However, the Fig.7 illustrates the weight of the wheel, other moments are not included, thus, we developed another comparative figure (Fig.8), for a better understanding, to include the weight in fatigue curves. In this figure, the vertical axis displays the moment divided by wheel weight and the horizontal axis is the life cycle. As the figure illustrates, the CFRP can endure more loads respecting its lower density. This simple comparison demonstrates the reason for recent approaches and trends towards CFRP. Due to these attractive properties, many manufacturers and researchers are developing new techniques to increase the production efficiency of CFRP.

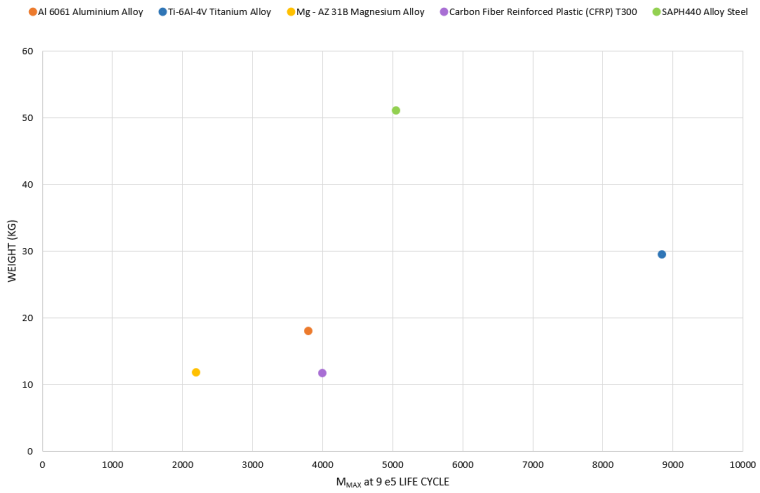

Fig. 7: The Maximum Moment at 9 * 10^5 Life Cycle Versus Weight.

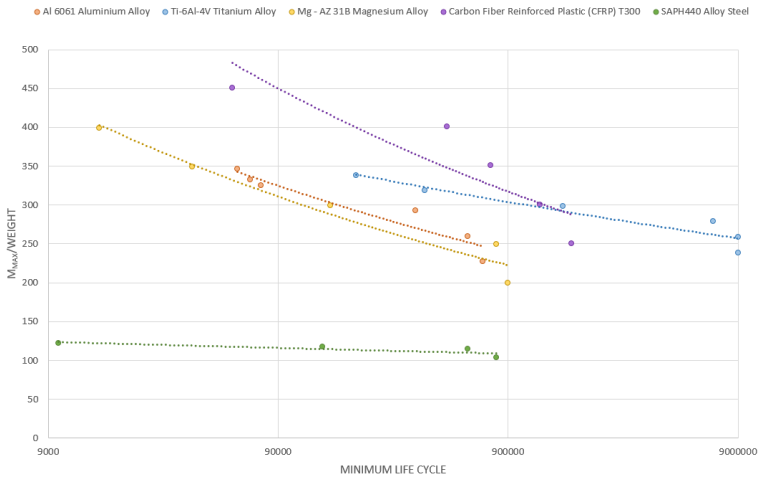

Fig. 8: The Minimum Life Cycle Versus Moment/Weight.

5. Conclusion

The paper investigates the fatigue life of the designed wheel based on the dynamic cornering fatigue test of ISO-3006. The simulation is performed on the wheel with 5 different materials in a critical range of moments. The final results are reported via figures. The key features of the results are as below:

- The maximum fatigue stress occurs around the spoke-hub joint and inner slut edges which are near the hub bolts.
- Steel alloy is capable to resist with higher moments and fatigue stresses, but a steel wheel is considerably heavier than other materials, therefore it has a lower performance.
- Considering fatigue strength, aluminium alloy and CFRP are comparatively close to each other, but CFRP is almost 40% lighter than aluminum.
- Titanium alloy expresses the best mechanical and fatigue strength than other materials, but due to its extortionate price, it is not affordable for all sectors.
- CFRP is on the top if we consider moment by weight. This material can bear further moments respecting the weight. As the CFRP has the lowest density among proposed materials, it demonstrates better

References

[1] R. Vijayakumar, C. Ramesh, R. Boobesh, R. Ram Surya, and P. Souder Rajesh, 'Investigation on automobile wheel rim aluminium 6061 and 6066 Alloys using ANSYS WORKBENCH', *Mater. Today Proc.*, no. xxxx, 2020, https://doi.org/10.1016/j.matpr.2020.03.798.

[2] N. Satyanarayana and C. Sambaiah, 'Fatigue Analysis of Aluminum Alloy Wheel Under Radial Load', *Int. J. Mech. Ind. Eng.*, vol. 2, no. 1, pp. 1–6, 2012.

[3] S. Czypionka and F. Kienhöfer, 'Weight reduction of a carbon fibre composite wheel', *Sci. Eng. Compos. Mater.*, vol. 26, no. 1, pp. 338–346, 2019, https://doi.org/10.1515/secm-2019-0018.

[4] Y. L. Hsu and M. S. Hsu, 'Weight reduction of aluminum disc wheels under fatigue constraints using a sequential neural network approximation method', *Comput. Ind.*, vol. 46, no. 2, pp. 167–179, 2001, https://doi.org/10.1016/S0166-3615(01)00125-7.

[5] W. Pang, W. Wang, W. Zhang, and X. Wang, 'Modeling and optimization for lightweight design of aluminum alloy wheel hub', *Key Eng. Mater.*, vol. 723 KEM, pp. 322–328, 2017, https://doi.org/10.4028/www.scientific.net/KEM.723.322.

[6] K. Linghu, B. Xiao, D. Zhang, X. Li, F. Wang, and Z. Wang, 'Shape Optimization of Passenger Vehicle Wheel on Fatigue Failure', *IOP Conf. Ser. Mater. Sci. Eng.*, vol. 381, no. 1, 2018, https://doi.org/10.1088/1757-899X/381/1/012025.

[7] Z. G. Zheng, G. W. Cai, and Z. J. Li, 'Simulation of automotive wheel rigidity test', *2010 Int. Conf. Intell. Comput. Technol. Autom. ICICTA 2010*, vol. 3, pp. 318–321, 2010, https://doi.org/10.1109/ICICTA.2010.605.

[8] Q. Gao, Y. Shan, X. Wan, Q. Feng, and X. Liu, '90-Degree Impact Bench Test and Simulation Analysis of Automotive Steel Wheel', *Eng. Fail. Anal.*, vol. 105, no. June, pp. 143–155, 2019, https://doi.org/10.1016/j.engfailanal.2019.06.097.

[9] X. Wan, X. Liu, Y. Shan, E. Jiang, and H. Yuan, 'Numerical and experimental investigation on the effect of tire on the 13° impact test of automotive wheel', *Adv. Eng. Softw.*, vol. 133, no. March, pp. 20–27, 2019, https://doi.org/10.1016/j.advengsoft.2019.04.005.

[10] J. Meng, P. Zhu, Z. Liu, and Q. Ji, 'Integration of multi-step stamping effects in the bending fatigue analysis of a steel wheel', *Fatigue Fract. Eng. Mater. Struct.*, vol. 36, no. 8, pp. 795–808, 2013, https://doi.org/10.1111/ffe.12047.
[11] W. Chai, X. Liu, Y. Shan, X. Wan, and E. Jiang, 'Research on simulation of the bending fatigue test of automotive wheel made of long glass fiber reinforced thermoplastic considering anisotropic property', *Adv. Eng. Softw.*, vol. 116, no. November 2017, pp. 1–8, 2018, https://doi.org/10.1016/j.advengsoft.2017.11.004.
[12] G. Rapids, G. Rapids, and R. U. S. A. Data, 'States Patent', vol. 2, 2020.
[13] Murphy et al., 'United States Patent : 5861366 United States Patent : 5861366', *New York*, vol. 2, no. 12, pp. 1–29, 2010.
[14] Torayca, 'T300 Data Sheet', *No. CFA-001*, pp. 6–7, 2002, [Online]. Available: www.toraycfa.com/pdfs/T300DataSheet.pdf.
[15] A. Amiri and M. N. Cavalli, 'Experimental investigation of fatigue behavior of carbon fiber composites using fully reversed four point bending test', *Conf. Proc. Soc. Exp. Mech. Ser.*, vol. 7, no. January, pp. 131–137, 2013, https://doi.org/10.1007/978-1-4614-4553-1_15.
[16] S. Suman, J. A. Abrol, and K. Ravi, 'Impact and modal analysis for different alloy wheel compositions', *IOP Conf. Ser. Mater. Sci. Eng.*, vol. 263, no. 6, 2017, https://doi.org/10.1088/1757-899X/263/6/062074.
[17] A. V. Structures, 'Military Handbook Metallic Materials and Elements for', no. December, 1998.
[18] S. Thirumalvalavan and N. Senthilkumar, 'Experimental investigation and optimization of hvof spray parameters on wear resistance behaviour of TI-6AL-4V alloy', *Comptes Rendus L'Academie Bulg. des Sci.*, vol. 72, no. 5, pp. 664–673, 2019, https://doi.org/10.7546/CRABS.2019.05.15.
[19] L. H. Zhao, H. C. Cai, S. Weng, and S. L. Zheng, 'Effect of pre-strain on the fatigue behavior of SAPH440 steel', *Mater. Express*, vol. 9, no. 9, pp. 1001–1008, 2019, https://doi.org/10.1166/mex.2019.1586.
[20] F. O. R. Standardization and D. E. Normalisation, 'International Standard Iso', vol. 1987, 1987.
[21] JIANG Xin *et al.*, 'Multi-objective Optimization Design of Magnesium Alloy Wheel Based on Topology Optimization', *J. Mater. Sci. Eng. B*, vol. 9, no. 1, pp. 13–24, 2019, https://doi.org/10.17265/2161-6221/2019.1-2.003.
[22] S. S. Panda, J. Gurung, U. K. Chatterjee, and S. Sahoo, 'Modeling-and-Fatigue-Analysis-of-Automotive-Wheel-Rim', *Int. J. Eng. Sci. Res. Technol.*, vol. 5, no. 4, pp. 428–435, 2016, doi: 10.5281/zenodo.49728.
[23] L. Natrayan, P. Santhakumar, P. Dinesh, K. R. Mohan, U. Scholar, and R. Mohandass, 'Design and Comparative Analysis of Old & New Model Car Wheel Rims with Various Materials', *J. Res.*, vol. 02, no. 02, 2016.
[24] E. M. Adigio and E. O. Nangi, 'Computer Aided Design and Simulation of Radial Fatigue Test of Automobile Rim Using ANSYS', *IOSR J. Mech. Civ. Eng.*, vol. 11, no. 1, pp. 68–73, 2014, https://doi.org/10.9790/1684-11146873.