N86-30071 D2 5P. 18334

MODELING AND EQUALIZATION OF NONLINEAR BANDLIMITED SATELLITE CHANNELS

HR825980 CD146017

K.Konstantinides
Hewlett-Packard Laboratories
Palo Alto, CA 94304

K.Yao
Electrical Engineering Department
University of California
Los Angeles, CA 90024

ABSTRACT

In this paper we consider the problem of modeling and equalization of a nonlinear satellite channel. The channel is assumed to be bandlimited and exhibits both amplitude and phase nonlinearities. A discrete time satellite link is modeled under both uplink and downlink white Gaussian noise. Under conditions of practical interest, *a simple and computationally efficient* design technique for the minimum mean square error linear equalizer is presented. The bit error probability and some numerical results for a BPSK system demonstrate that the proposed equalization technique outperforms standard linear receiver structures.

I. INTRODUCTION

The problem of nonlinear channel modeling and equalization is of analytical and practical interest. An important example of a nonlinear channel is a digital satellite communication link, which uses a Traveling Wave Tube (TWT) amplifier operating in a near saturation region. The TWT exhibits nonlinear distortion in both amplitude (AM/AM conversion) and phase (AM/PM conversion). In addition, at high transmission rates the channel's finite bandwidth causes a form of distortion known as Intersymbol Interference (ISI).

In this paper, we will examine the problem of modeling and equalizing this type of nonlinear satellite communication link. The observed data are corrupted by additive white noise, uncorrelated with the input data.

A number of other researchers have studied this problem. Fredricsson [1], considered a QPSK system and specified an optimum linear receiver filter using a Mean Square Error (MSE) criterion. The channel nonlinearity in [1] was handled via successive number of linearizations. Mesiya et al. [2-3] analyzed the BPSK system. In [2] a maximum likelihood receiver was considered, while in [3] a simpler linear receiver, based on the MSE criterion, was presented. In both [2] and [3], the nonlinearity of the TWT is expressed in terms of Bessel function integrals. The MSE criterion was also applied by Biglieri et al. [4] in their derivation of an optimum linear receiver. In [1], [3], and [4], the authors work in the frequency domain, and the solution is given in terms of integral equations that usually have to be solved using numerical techniques.

In [5], Ekanayake and Taylor presented a suboptimum maximum-likelihood type decision feedback receiver. However, because of the analytical complexity of their solution, they approximate the TWT with a hard limiter. A different modeling approach was taken by Benedetto et al. [6]. First, they identify the whole channel using a Volterra Series expansion [7]. Then they suggest a nonlinear equalizer, based again on the MSE criterion. Although at the output of a nonlinear equalizer the MSE is smaller than the MSE at the output of a linear equalizer, it is not completely clear if there is a significant improvement in the probability of error performance of the system to justify the complexity of the nonlinear receiver.

In this paper, we present the design and performance analysis of the optimum linear MSE receiver for a nonlinear satellite channel. While the methods considered here are applicable to various in-phase and quadri-phase modulation systems, for simplicity and lack of space we will illustrate this approach by using only BPSK examples. More generalized results will be presented elsewhere. There are two major differences between our design as compared to the above reviewed approaches. First, we use a very simple model for the input-output relationship of the TWT amplifier, proposed first by Saleh [8]. Second, by working in the discrete time domain we avoid the complex integral equations of the other approaches. In addition, a fast and simple iterative algorithm [9] permits the easy computation of the autocorrelation coefficients of the output of the nonlinear system. Thus, we are able to obtain a new simple and computationally efficient linear equalization technique under the MSE criterion. Based on the same modeling approach, a zero forcing type of linear equalizer was also presented in [10].

In Section 2, a simplified model for a typical satellite link is presented and the corresponding BPSK discrete model is derived. The optimum MSE equalizer is presented in Section 3. In Section 4, the probability of error performance of the receiver is derived. Finally in Section 5 some numerical examples, and comparisons with standard linear receivers are presented.

II. CHANNEL MODELING

Consider the simplified model of a digital satellite communication channel as shown in Figure 1. We will examine each one of the different subsystems composing this model. This study will enable us to derive an equivalent discrete model. By working in discrete time we will avoid the analytical problems arising with continuous signals. Our analysis is similar to that of Ekanayake and Taylor [5].

The source output is a random sequence $\{U(n)\}$ of equally probable uncorrelated symbols. Thus, in a BPSK system, $U(n)=\{1,-1\}$ at $n=0, T, 2T, \ldots$, where $P[U(n) = 1] = P[U(n) = -1] = 0.5$, $E[U(n)U(n-k)]=0$ for $k \neq 0$, and T^{-1} is the signaling rate.

Let $p(t)$ denote a pulse shaping function. Often it can be a rectangular function of unit amplitude over a time period of length T. In any case, the output of the modulator can be expressed in the form

CH2314-3/86/0000-1622 $1.00 © 1986 IEEE

ORIGINAL PAGE IS
OF POOR QUALITY

$$s(t) = \sum_{n=-\infty}^{\infty} U(n)p(t-nT)\cos\omega_c t, \tag{1}$$

where ω_c is the carrier frequency.

We shall assume that the transmission filter is the one which determines the channel bandwidth. This filter is also responsible for the creation of ISI. Let $G(t) = 2g(t)\cos\omega_c t$ be the impulse response of this filter, where $g(t)$ is the impulse response of a corresponding low pass filter. Then the output of this filter can be expressed as

$$s_o(t) = \sum_{n=-\infty}^{\infty} U(n)h(t-nT)\cos\omega_c t, \tag{2}$$

where $h(t)=g(t)*p(t)$. The purpose of our analysis is the design of a receiver structure for the estimation of the transmitted source symbol during the n th signaling interval $nT \le t \le (n+1)T$. Thus during the n th signaling interval (2) can be rewritten as

$$s_o(t) = U(n)h(t-nT)\cos\omega_c t + \sum_{i\neq n} U(i)h(t-iT)\cos\omega_c t, \tag{3}$$

$$nT \le t \le (n+1)T.$$

The first term in (3) represents the transmitted symbol we want to estimate, and the second term represents the ISI due to the filter.

On the uplink channel, $s_o(t)$ is corrupted by additive white Gaussian noise. Thus, using the narrow band model for the noise, the input to the TWT can be expressed as

$$s'_u(t) = s_o(t) + n_{uc}(t)\cos\omega_c t - n_{us}(t)\sin\omega_c t. \tag{4}$$

$n_{uc}(t)$ and $n_{us}(t)$ represent the in-phase and quadrature components of the uplink noise, each with zero mean and variance σ_u^2. From (3) and (4)

$$s'_u(t) = r_u(t)\cos(\omega_c t + \lambda(t)), \tag{5}$$

where

$$r_u(t) = [(r(t)+n_{uc}(t))^2 + n_{us}^2(t)]^{1/2}, \tag{6}$$

$$r(t) = U(n)h(t-nT) + \sum_{i\neq n} U(i)h(t-iT), \tag{7}$$

and

$$\lambda(t) = \tan^{-1}\frac{n_{us}(t)}{r(t)+n_{uc}(t)}. \tag{8}$$

The TWT is a nonlinear memoryless amplifier. It exhibits nonlinear distortion in both the amplitude and the phase. Using a quadrature model, the output $s_d(t)$ of the TWT can be expressed in the form

$$s_d(t) = P[r_u(t)]\cos(\omega_c t + \lambda(t)) - Q[r_u(t)]\sin(\omega_c t + \lambda(t)). \tag{9}$$

From Saleh [8] an expression of P(r) and Q(r) is given by

$$P(r) = \alpha_p \frac{r}{1+\beta_p r^2} \tag{10a}$$

and

$$Q(r) = \alpha_q \frac{r^3}{(1+\beta_q r^2)^2}. \tag{10b}$$

The coefficients of (10) are obtained by a least-square error curve fitting procedure of the specific TWT characteristics,

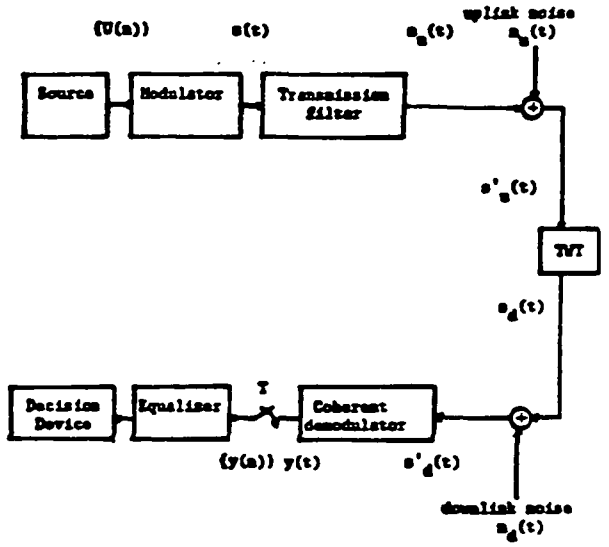

Figure 1: Satellite Communication System Model

which are originally specified by the manufacturer. In Figure 2 the P(r) and Q(r) functions of (10) are plotted for $\alpha_p = 2.0922$, $\beta_p = 1.2466$, $\alpha_q = 5.529$ and $\beta_q = 2.7088$ [8]. All input and output voltages were normalized.

Because of the downlink additive white noise $n_d(t)$, the received waveform $s'_d(t)$ can be expressed as

$$s'_d(t) = s_d(t) + n_{dc}(t)\cos\omega_c t - n_{ds}(t)\sin\omega_c t, \quad nT \le t \le (n+1)T. \tag{11}$$

The signal $s'_d(t)$ of (11) is now coherently demodulated by a carrier $2\cos\omega_c t$. We assume that the bandwidth of the receiving filters is wide enough so that no additional ISI distorts the signal. The output y(t) of the demodulator is sampled every T seconds to produce at the n th signaling interval the in-phase sample

$$y(n) = y(t_0) = P[r_u(t_0)]\cos\lambda(t_0) + Q[r_u(t_0)]\sin\lambda(t_0) + n_{dc}(t_0). \tag{12}$$

t_0 is an appropriately chosen sampling instant within the interval, $nT \le t \le (n+1)T$.

Under the assumption of high available power at the earth stations, the effects of the uplink noise can be considered negligible. Thus we can assume that $\lambda(t)=0$. Then y(n) of (12) becomes

$$y(n) = P[r(t_0)] + n_{dc}(t_0). \tag{13}$$

From (7) and (13) an equivalent discrete-time model for the communication channel of Figure 1 can be represented as in Figure 3. Now, with $U(n)=\{1,-1\}$, the basic relationships are

$$r(n) = A\sum_{k=-N1}^{N2} h_k U(n-k), \tag{14}$$

$$P(n) = P[r(n)] = \frac{\alpha r(n)}{1+\beta r^2(n)}, \tag{15}$$

$$y(n) = P(n) + w(n), \tag{16}$$

where α and β are specified constants that depend on the specific type of the TWT. w(n) is white Gaussian noise of zero mean and variance σ_w^2, and uncorrelated with the input data.

ORIGINAL PAGE IS
OF POOR QUALITY

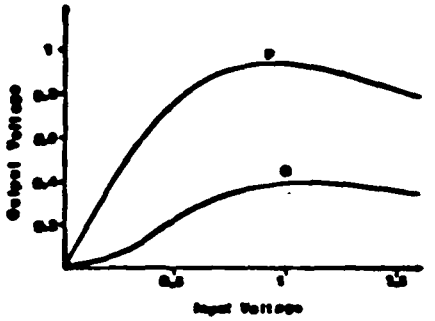

Figure 2 : TWT inphase and quadrature characteristics

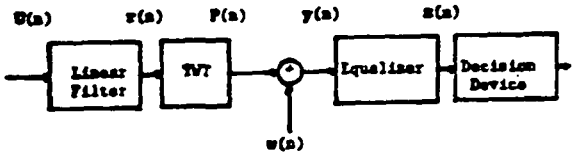

Figure 3 : Discrete Model of Satellite Communication Channel

The values of N1 and N2 represent the memory of the transmitting filter. The gain A depends on the specific operating point of the TWT.

III. THE MEAN-SQUARE ERROR EQUALIZER

Let the receiver output z(n) be expressed as the output of a Tapped- Delay Line (TDL) filter in the form of

$$z(n) = \sum_{k=-M1}^{M2} c_k y(n-k) , \tag{17}$$

where from (16), y(n)= P(n)+w(n).

In the theory of the Mean-Squares criterion, the tap weight coefficients $\{c_j\}$ of the equalizer are adjusted to minimize the mean square error

$$\epsilon^2 = E[U(n) - \sum_{k=-M1}^{M2} c_k y(n-k)]^2 . \tag{18}$$

Minimization of (18) with respect to the $\{c_j\}$ coefficients, yields the linear system of M= M1+M2+1 equations

$$\sum_{k=-M1}^{M2} c_k R_y(j-k) = R_{uy}(j) , \quad j=-M1,\ldots,M2 , \tag{19}$$

where $R_y(k) = R_y(-k) = E[y(n)y(n-k)]$ and $R_{uy}(k) = E[U(n)y(n-k)]$ for all values of k.

From the uncorrelatedness of the input data and the noise, $R_{uy}(k) = R_{up}(k)$, for all values of k. Also, since the output P(n) of the nonlinearity, and the noise w(n) are independent

$$R_y(k) = R_p(k) + \sigma_w^2 \delta_{0k} , \tag{20}$$

where σ_w^2 is the variance of the noise. Thus in order to solve (19) it is necessary to evaluate first the necessary $R_p(\cdot)$ and $R_{up}(\cdot)$ coefficients. While in the case of a linear channel the calculation for the $R_p(\cdot)$ coefficients is straightforward, in the nonlinear case the evaluation may present some numerical difficulties.

Computation of the Autocorrelation coefficients

The sequence {P(n)} at the output of the nonlinearity can be considered as the output of a finite state sequential machine. Since the nonlinearity has no memory, from (14) the state sequence can be given by

$$s(n) = [U(n+N1),\ldots,U(n),U(n-1),\ldots,U(n-N2)] . \tag{21}$$

{U(n)} is an i.i.d sequence, thus {s(n)} is itself a stationary Markov chain [9].

Let us denote by Π the transition probability matrix of the Markov chain {s(n)}. A brute force evaluation of $R_p(\cdot)$ involves multiplication of square matrices of dimension $2^{N1+N2+1}$ [9-10], which would be computational impractical unless special consideration is given to the special properties of Π. In [9] a particularly effective and simple algorithm for the evaluation of autocorrelation coefficients of a nonlinear system was presented. The algorithm, as applied to our specific problem is given below.

Algorithm for the computation of $R_p(k)$

1. Let N=N1+N2+1, and store in vector β_0 (of dimension 2^N) the values at the output of the nonlinearity for each state s(j) of (21), for j=1,2,...,2^N.

2. Compute the vector α_0 (of dimension 2^N), where the j th component is given by

$$\alpha_0(j) = \beta_0(j)/2^N , \; j=1,2,\ldots,2^N .$$

3. For k=0,1,...,N-1, do the following computations

a) $$R_p(k) = \sum_{j=1}^{2^{N-k}} \alpha_k(j)\beta_k(j) .$$

b) Store in the first 2^{N-k-1} positions of α_k, the vector α_{k+1}, computed by

$$\alpha_{k+1}(j) = \alpha_k(j) + \alpha_k(j+2^{N-k-1}) , \; j=1,2,\ldots,2^{N-k-1} .$$

c) Store in the first 2^{N-k-1} positions of of the β_k vector, the vector β_{k+1}, where

$$\beta_{k+1}(j) = \frac{\beta_k(2j-1)+\beta_k(2j)}{2} , \; j=1,2,\ldots,2^{N-k-1} .$$

4. $R_p(k) = 0$, for $k \geq N$.

The above algorithm is easy to implement and requires only two vectors of size 2^N as basic computation storage.

Computation of Cross-correlations

Since for each state s(j) of (21) the value of P[s(j)]= $\beta_0(j)$ has already been computed for the evaluation of the $R_p(\cdot)$ coefficients, a brute force technique can be easily applied for the evaluation of the cross-correlation terms. Thus from [10],

$$R_{up}(-k) = (1/2^{N-1}) \sum_{j,U(n-k)=1} P[s(j)], \quad -N1 \leq k \leq N2 , \tag{22}$$

where the summation in (22) is done over all those states where U(n-k) = 1.

In summary, the design procedure for the optimum linear MSE equalizer is given as follows. First, compute the 2^N possible values of P(n) at the output of the nonlinearity. Then use the algorithm to compute the $R_p(\cdot)$ coefficients and (22) to

compute the $R_{ap}(\cdot)$ coefficients. Finally, solve the linear system in (19). The solution of (19) yields the tap-weight coefficients of the MSE receiver.

IV. EVALUATION OF BIT-PROBABILITY OF ERROR

Unfortunately, there is no simple relationship between the residual mean square error of the MSE receiver and the bit error probability [11]. For moderate channel and equalizer memories, a brute force method that yields an exact result could be applied. Denote by D_i one of the 2^{M+N-2} possible realizations at the input of the receiver, with U(n)=1, and by c the M x 1 vector of the filter coefficients. Then from (16) and (17), the receiver output due to a specific input {U(n)} sequence is given by

$$z_i = D_i c + Wc \ , \tag{23}$$

where W is a M=M1+M2+1 row vector of noise samples.

Let {w(n)} be a white noise sequence of zero mean and variance σ_w^2. Let $\eta = Wc$. Then $E[\eta]=0$ and $\sigma_\eta^2 = \sigma_w^2 \sum_{k=-M1}^{M2} c_k^2$. Then with U(n)=1 and for a threshold of zero, the conditional error probability

$$P_e(i) = Pr[D_i c + \eta < 0 / \{U(i)\}] \ , \tag{24}$$

is fixed, and

$$P_e(i) = Q(D_i c / \sigma_\eta) \ , \tag{25}$$

where

$$Q(x) = \frac{1}{\sqrt{2\pi}} \int_x^\infty e^{-\frac{t^2}{2}} dt \ . \tag{26}$$

Then the average error probability P_e is given by

$$P_e = (1/L) \sum_{i=1}^{L} P_e(i) \ , \quad L = 2^{M+N-2} \ . \tag{27}$$

In our numerical example the SNR is defined as

$$SNR = 10 log_{10}(P_{av}^2 / 2\sigma_\eta^2) \ , \tag{28}$$

where $P_{av} = (1/L) \sum_{i=1}^{L} P[r^{(i)}(0)]$.

If the exact error probability of (27) proves too cumbersome and too time consuming to evaluate because of the large number of terms, one can resort to a number of different approximate methods that yield tight upper and lower bounds of P_e [11].

V. NUMERICAL EXAMPLE

The purpose of this section is to illustrate the application of our results in the design of a linear optimal receiver, and to compare its performance with other receivers for a digital satellite link.

In our model of the linear part of the satellite link, we assume that the ISI is introduced by a 3-pole Butterworth filter. The two sided bandwidth B of the filter is the same as the minimum Nyquist rate (i.e., BT=1). The number of samples considered for the ISI is determined by those ISI samples whose magnitude are at least greater than 0.01 times the main sample. In our example, a channel memory (N1+N2) of 3 ISI terms was considered adequate.

The characteristics of the TWT for this study are the same as those in Figure 2. Thus in the evaluation of P[r(n)] in (15), the parameters of the TWT are $\alpha = 2.0922$ and $\beta = 1.2466$. As mentioned before, those values were taken from Saleh ([8], Figure 5) and represent a specific satellite TWT. The gain factor A, of (14) was determined so that with no ISI the TWT would operate at the 2 dB input backoff point. Because of the low ISI introduced by the transmission filter, a 4-tap (M1+M2+1=4) TDL linear receiver was considered to be adequate. Thus, $L = 2^{(4+4-2)} = 64$.

Now we compare our optimum linearly equalized MSE receiver with the conventional linear receivers. Using the brute force technique described in Section 4, the bit error probability for the various receivers was evaluated and plotted in Figures 4 and 5, for values of SNR as defined in (28).

Figure 4 exhibits the P_e performance of the designed MSE filter, and the P_e performance of two 3-pole Butterworth receiving filters. One receiving filter (with BT=1) is identical to the transmitting filter, while the other one has BT=0.75. In Figure 5, the performance of the M.S receiver is compared with that of two 4-pole Butterworth receiving filters. One has BT=0.75 and the other one has BT=1. A numerical search procedure for Butterworth filters with different BT products, showed that an increase in BT does not necessarily correspond to an improved P_e performance. In fact, filters with BT=2 are only marginally better than filters with BT=1.

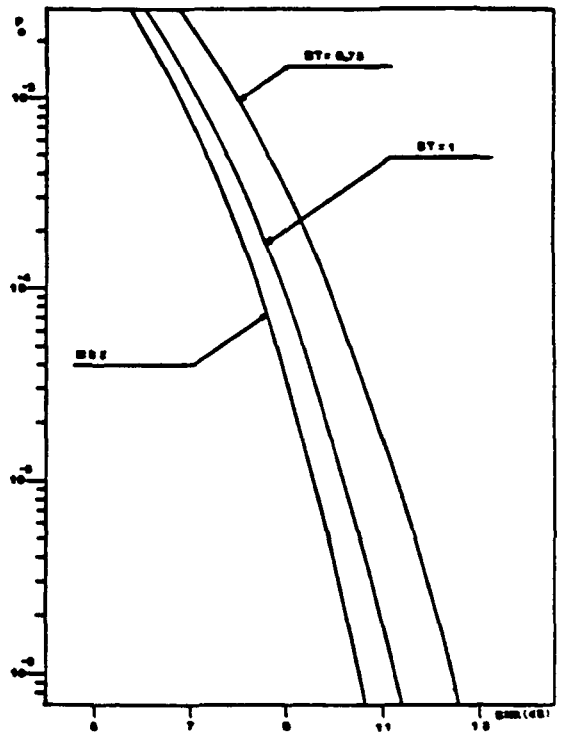

Figure 4 : P_e performance of MSE and 3-pole Butterworth receiving filters.

For P_e = 10E-6, the optimum MSE receiver is at least 0.8 dB better than the 3-pole Butterworth filters and 1.2 dB better than the 4-pole Butterworth filters. The P_e performance of a channel with no ISI, but with the identical TWT, carrier power and noise variance was evaluated. The numerical results showed that for these examples the bit error rate of the MSE equalizer is very close to that of the no ISI case [10].

ORIGINAL PAGE IS
OF POOR QUALITY

VI. SUMMARY AND CONCLUSIONS

In this paper we considered the problem of modeling and equalization of a digital satellite nonlinear and bandlimited channel. Starting from a typical satellite link, we developed the corresponding BPSK discrete-time model, and solved for the optimum linear MSE receiver. A simple and computationally efficient algorithm was derived for the evaluation of the equalizer coefficients, based on the memoryless nonlinearity of the system. Numerical examples for a typical satellite link demonstrated that the optimum linear MSE receiver outperforms the conventional linear type receiving filters. In general, our modeling and equalization techniques provide a simple and computationally efficient alternative to existing approaches.

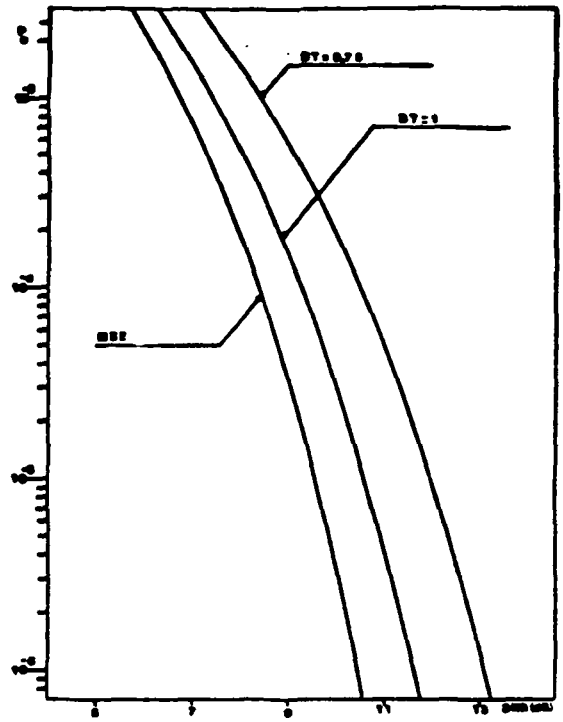

Figure 5 : P_e performance of M.S.E and 4-pole Butterworth receiving filters.

REFERENCES

1. S.A Fredricsson, *Optimum Receiver Filters in Digital Quadrature Phase-Shift- Keyed Systems with a Nonlinear Repeater*, IEEE Trans. on Comm., Vol. COM-23, No.12, pp.1389-1399, Dec. 1975.

2. M.F.Mesiya, P.J. McLane and L.L. Campbell, *Maximum Likelihood Sequence Estimation of Binary Sequences Transmitted Over Bandlimited Nonlinear Channels*, IEEE Trans. on Comm., Vol. COM-25, No. 7,pp. 633-643, July 1977.

3. M.F.Mesiya, P.J. McLane and L.L Campbell, *Optimal Receiver Filters for BPSK Transmission over a Bandlimited Nonlinear Channel*, IEEE Trans. on Comm., Vol. COM-26, pp.12-22, Jan. 1978.

4. E.Biglieri, M.Elia and L. L.Presti, *Optimal Linear Receiver Filter for Digital Transmission over Nonlinear Channels*, Proc. 1983 Intern. Tirrenia Workshop on Dig. Commun., pp. F.3.1-F.3.13, Sept. 1983.

5. E.Ekanayake and D.P. Taylor, *A Decision Feedback Receiver Structure for Bandlimited Nonlinear Channels*, IEEE Trans. on Comm., Vol. COM-29, No. 5, pp.539-548, May 1981.

6. S.Benedetto and E.Biglieri, *Nonlinear Equalization of Digital Satellite Channels*, IEEE Journal on Select. Areas in Comm., Vol. SAC-1, No.1, pp.57-62, Jan. 1983.

7. S.Benedetto, E. Biglieri, R. Daffara, *Modeling and Performance Evaluation of Nonlinear Satellite Links- A Volterra Series Approach*, IEEE Trans. on Aerospace and Elec. Systems, Vol. AES-15, No.4, pp.494-506, July 1979.

8. A.A.M. Saleh, *Frequency -Independent and Frequency-Dependent Nonlinear Models of TWT Amplifiers*, IEEE Trans on Comm., Vol. COM-29, No 11, pp 1715-1720., Nov. 1981.

9. R.Padovani and G.L.Pierobon, *Spectral Analysis of Digital Messages Through Finite-Memory Transformations*, IEEE Trans. on Comm., Vol. COM-32, No. 11, pp. 1214-1218, Nov. 1984.

10. K.Konstantinides, *Channel Modeling and Equalization Algorithms Based on Least Squares Techniques*, Ph.D Dissertation, Un. of Calif., Los Angeles, 1985.

11. J.G. Proakis, *Digital Communications*, Mc. Graw-Hill, 1983.