MODULAR POWER CONDITIONING UNIT FOR PHOTOVOLTAIC APPLICATIONS.

Parag Bhide and S.R.Bhat

Centre for Electronics Design and Technology,
Indian Institute of Science,
Bangalore, 560012.
INDIA.

ABSTRACT

This paper deals with some design issues involved in a photovoltaic power conditioning system. The power conditioning unit (PCU) is built in a modular way and is controlled by a microcontroller for maximum power point tracking (MPPT). The choice of the power converter and suitable pv_array configuration are also discussed. Power MOSFETs are used as switching elements. Experimental system of 1kW capacity is also explained, with battery charging as a specific application.

1. INTRODUCTION

This paper discusses the design of a modular power conditioning system used in photovoltaic applications. This power conditioning system also incorporates the MPPT controller to obtain the maximum possible energy from the pv array. The system is designed in such a way that the total power output is shared by several power conditioning units (PCUs) running in parallel. The power conditioning units are used for matching the load with the pv array. Each of the PCU is powered from a separate pv array. The PCUs deliver the power into the same load, which is a 48 volt battery bank. All the PCUs are controlled by a µP based controller for optimum utilization of the available energy. The parallel configuration of PCUs offers several advantages. The power required to be handled by one PCU is reduced, which makes the PCU design simpler and make it more efficient. This configuration offers the system expansion option at a very low cost, for increasing the power handling capacity of the system. The system reliability is increased as total shut down is not required in case of a failure. A centralized controller offers the ease of control and supervision of the entire system. Figure 1 shows an experimental system of 1 kW capacity which is explained in this paper.

2. PHOTOVOLTAIC ARRAY CHARACTERISTICS

The power output of a pv array depends significantly on the array characteristics and the loading conditions. Typical I_V and P_V characteristics of a solar cell are shown in Figure 2. It is seen that the power output from a solar cell is maximum only if the load is operated at maximum power point (MPP). The MPP is not a fixed point. The I_V characteristics of solar cell shift with changes in insolation (solar radiation in kw/m^2) and the cell temperature. Hence MPP also becomes a function of insolation and cell temperature [1]. Figure 3 shows the locus of MPP as the insolation changes. As the MPP changes the power delivered to the load is reduced. Therefore a power conditioning unit, called maximum power point tracker (MPPT), is required to match the load to the pv array irrespective of the variations in the MPP or in the load itself. The maximum power is transferred only under the matched conditions.

3. POWER CONDITIONING UNIT (PCU)

This particular system is used for charging a 48 volt battery bank. The need for an MPPT, in this application is quite clear as both MPP and the battery voltage are changing [4]. A PWM controlled DC-DC converter can be used in this application for power conditioning and matching. In this system a total power of 1 KW is shared by two PCUs operating in parallel. The power shared by each PCU is decided by the MPP of the pv array connected to it. PCU is a PWM controlled DC_DC converter. The operating point on pv array is adjusted to MPP by controlling the duty cycle of the PCU. Various converter topologies can be employed for PCU. In the present work, a buck converter is used for power conditioning. A comparative study of various converters shows that buck converter requires lower device ratings than other configurations, for this application. The output current (charging current) is roughly 10 A for each PCU at peak insolation condition.

0-7803-0695-3/92 $3.00 © 1992 IEEE

It should be noted that the input current (array current) for the buck converter is of discontinuous (switching) nature. This results in an unstable operating point on pv array which switches between MPP and the open circuit and results in the loss of energy. Under such condition true maximum power point operation could never be achieved. To avoid this problem a large capacitor is used at the input of the power conditioning unit. This offers a stable operating point on the array. The capacitor still introduces a switching frequency ripple on the array voltage because of charging and discharging in every cycle. This ripple can be kept to a minimum acceptable value by using a larger capacitor at the input. A 2000 μF capacitor gives the satisfactory results.

3.1 PV ARRAY SIZING

It is important to note that the buck converter can match the load to the pv array if the load is less than the optimum load for the pv array . Therefore pv arrays must be configured such that the worst case (lowest) MPP voltage is more than the maximum output voltage. Kyocera polycrystalline pv panels are used in this work. Each panel is rated for 44 peak watt with the open circuit voltage of 20 volts. Spice circuit simulation was used to simulate the i_v characteristics of the pv panel under different insolation and temperature conditions. The Spice model used is shown in figure 4. In this simulation a current source whose value is changed according to the insolation, is used in parallel with a diode string to model the PV module. The diode parameters in the spice model are chosen carefully so that the simulated characteristics match with the characteristics supplied by the manufacturer. The Spice simulation also takes care of the temperature variation effects. The rated peak power of the PV module is available only at the reference conditions i.e. an insolation of 1 kw/m² and cell temperature of 27 °C. But in practice, high insolation is always accompanied by high cell temperatures, in which case the MPP voltage of a pv array is found to be the lowest. This fact must be considered before sizing the pv array for the required application. Spice simulation results are used to configure the 500 watt pv array such that MPP operation is possible at an insolation of 1 kw/m² and the cell temperature of 60 °C (Vmp = 12 volt). This results in connecting six pv panels in series. Two such strings are connected in parallel to get the required power and voltage ratings.

3.2 MOSFET BASED POWER CONVERTER

A MOSFET is used as a switching device as it is easy to control and can be operated at higher frequencies as compared to BJTs. For the selected load and pv array configuration, it can be shown that the duty cycle must be varied from 0.33 to 0.90 to achieve MPP operation. The floating gate drive used is shown in Figure 5. The driver transistors (Q1,Q2) are driven out of phase, in alternate cycle. The duty cycle ratio for the individual transistor varies between 0 and 0.5. The two secondaries are ORed so that the resultant duty cycle can be varied from 0 to 1.0. The gate drive circuit greatly affects the efficiency of the converter. A fast turn off circuit is used to minimize the turn off losses. All the gate drive circuit components are optimized using spice simulation to achieve higher efficiency. The switching device must be carefully selected to obtain a high efficiency. The efficiency of 92% (at full load) and 83% (at 30% load) has been achieved during the experimental phase of the project.

3.3 MPPT CONTROLLER

Various schemes have been proposed to implement the maximum power point tracking function [2]. A technique based on the dP/dV method is implemented in this work. The μP based approach used in this project, offers a simpler and a stable solution. It also offers several other useful features like good steady state and transient response, flexibility in the control algorithm which are discussed in this paper.

The system is built around 80C31 micro controller which has a powerful instruction set, with built in multiply function. The controller uses an 8 bit, 8 channel ADC interface for reading the voltage and current of each of the PV array. These values are used for calculating the instantaneous power output of the pv array. DAC interface is used for giving the control signals to the PCUs.

3.4 CONTROL ALGORITHM

A timer interrupt is generated at every 100mS for initiating the control action. Initially on startup, the duty cycle is set to ZERO and is gradually increased. At each interrupt the sign of dP/dV is calculated. It can be seen from figure 2 that dP/dV is positive on the left hand side (short circuit side) of the MPP while it is negative on the right hand side and zero at MPP. Therefore for a buck converter, the pulse width (D)

should be increased for negative dP/dV and D should be reduced for positive dP/dV so as to shift the operating point towards the MPP [it is important to note that a decision based on the sign of dP alone does not result in a stable operating point]. In the steady state, the operating point oscillates about the MPP. The change in the duty cycle directly reflects as a change in the operating point. In the steady state the change in D i.e. step size is kept very small to keep the operating point as close to MPP as possible. A fast response is necessary when the system is powered up or in case of passing clouds, so that the system can quickly lock on to MPP and prevent the loss of energy. The controller stores the sign of dP/dV for the past few cycles to detect whether the system is being operated in the steady state. If the system is not in the steady state, the step size is the suitably modified to lock back on to MPP as fast as possible. This dynamic stepsize change improves the transient response of the system. The same procedure is repeated for all the PCUs connected to the system. The controller maintains a 16 byte data structure for each of the PCU. (figure 6) This data is used for controlling the individual PCU. The flow chart depicting the control sub_routine is given in figure 7.

It may be noted that this technique can be used with other types of dc loads (other than battery) where the resulting load voltage is lower than the MPP voltage, as a buck converter is used here. In the battery charging application the system power supply is derived using a SMPS powered by the battery. In the case of battery_less systems, separate arrangements should be made for powering the control system.

All the protections and the battery status are checked at 1 second interval in the main program. The main program also determines the operating mode of the system and takes care of the status indications. The controller monitors the battery voltage. When the battery is fully charged the controller enters into a Float_charging mode in which a small amount of power is transferred to the battery bank for float charging. The controller also indicates the undercharged state of the battery and provides a signal to disconnect the load from the battery. A low power condition is also indicated on the front panel when the insolation is poor, say,less than 30W/sqm.

4. CONCLUSIONS

Concept of modular power conditioning systems for photovoltaic applications has been dealt with in this paper, with a particular reference to battery as the load. A MOSFET based power conditioning unit of 1KW capacity is discussed in detail along with a control algorithm to track the maximum power point. Maximum power from each PV array is extracted in spite of any mismatch in the array characteristics. One system controller is capable of handling several PCUs, simplifying the design and resulting in a lower cost of the system. It was observed that the MPPT increases the power output by about 10 % over a day as compared to the direct connection.

REFERENCES

[1].Solar cell from basics to advanced systems, by Chenming Hu and R.M. White. McGraw-Hill publication.

[2].Step up maximum power point tracker for photovoltaic arrays, Ziyad Salameh and Daniel Taylor, Solar Energy Vol. 44 No.1, pp 57 - 61, 1990.

[3].Design, construction and field experience of an Indian stand alone rural photovoltaic solar energy centre. A.Saha, P.Basu, C. Bhattacharya. Sixth EC PVSEC 1985 pp 533 - 537.

[4].Mismatch between batteries and two module types pv arrays, Interest of DC-DC converters, by P. Gucher, J. A. Roger, S. Massad, J. Posbic, J. Pivot, Fourth EC PVSEC 1982 ,pp 330-334.

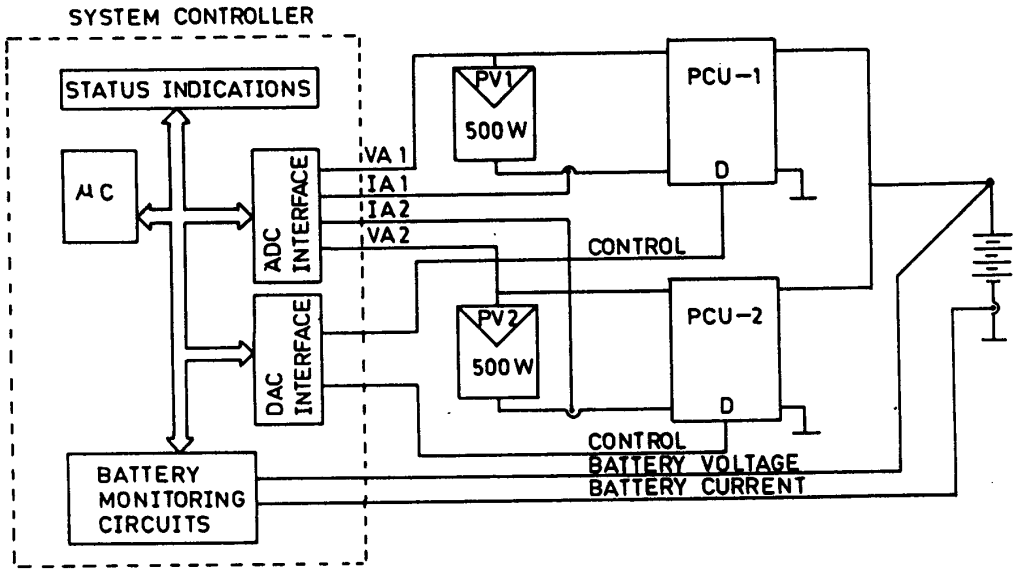

Fig. 1 SYSTEM BLOCK DIAGRAM.

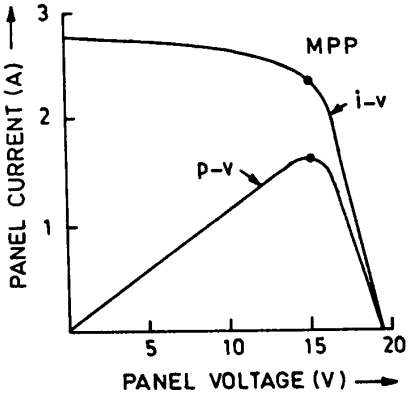

Fig. 2 I-V CHARACTERISTICS OF A PV PANEL.

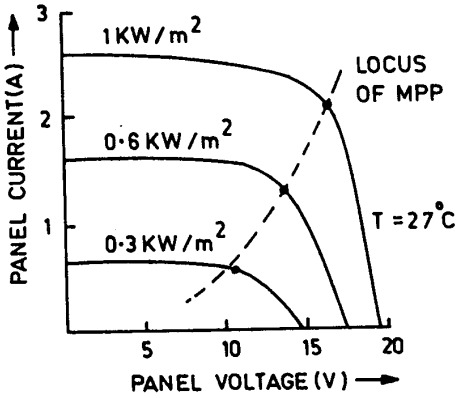

Fig. 3 VARIATION IN MPP WITH INSOLATION.

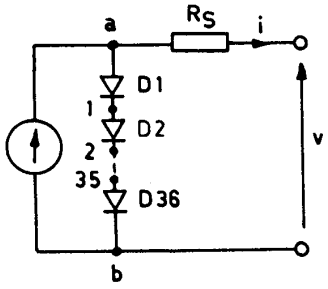

Fig. 4 SPICE MODEL.

```
*.SUBCKT definition of a  solar panel
.SUBCKT xpanel a b
D1 a 1 diode
D2 1 2 diode
D3 2 3 diode
D4 3 4 diode
D5 4 5 diode
      .
      .
      .
D34 33 34 diode
D35 34 35 diode
D36 35 b diode
.model diode D[(is=1.5e-9)]
.ends
```

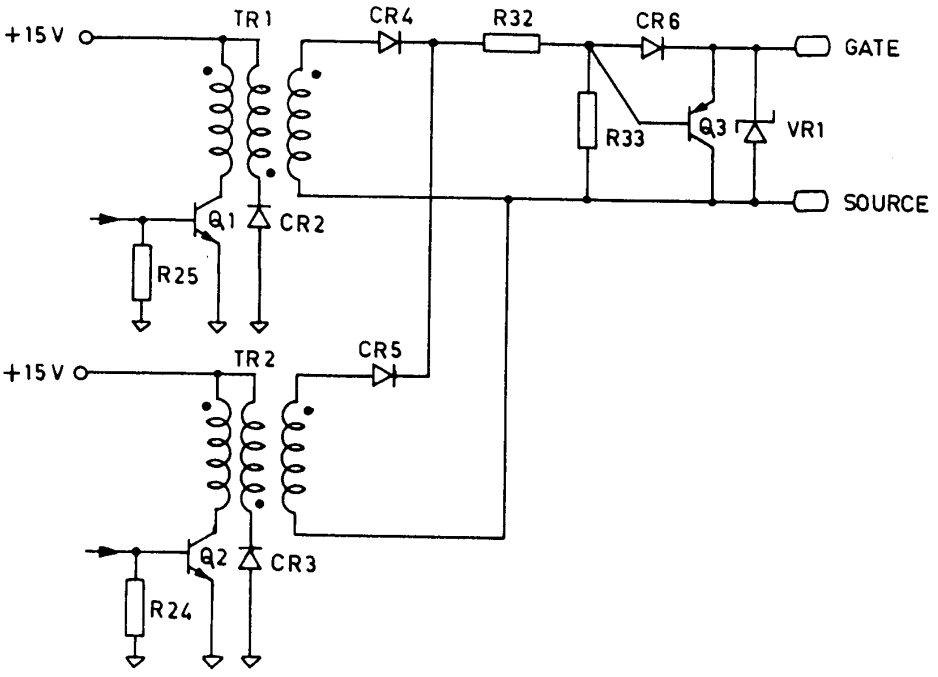

Fig. 5 GATE DRIVE CIRCUIT.

0C-0D	DAC PORT ADDR (CONTROL)
0A-0B	Pnew
08-09	Pold
:	
05	ADC CHANNEL
04	ARRAY VOLTAGE
03	ARRAY CURRENT
02	STEP SIZE
01	INCREASE/DECREASE D
00	CONTROL SIGNAL (D)

Fig.6 : DATA STRUCTURE

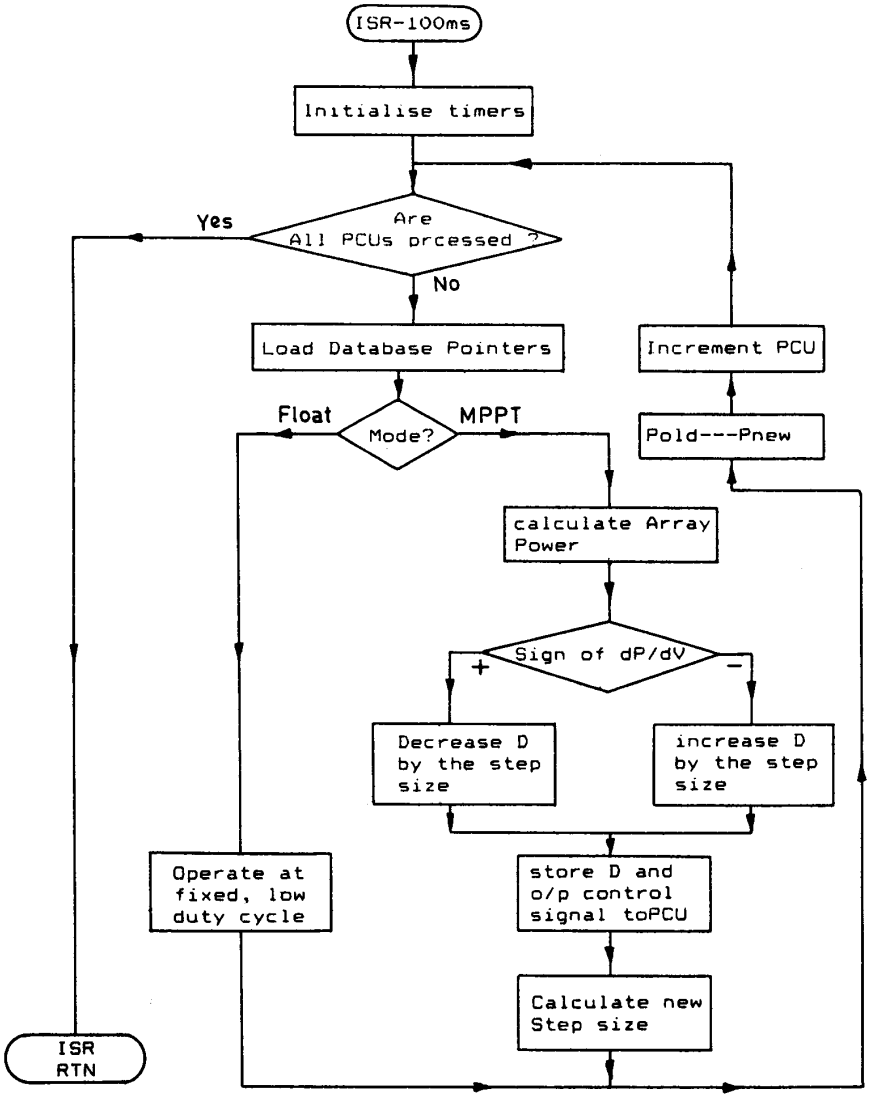

Fig.7 CONTROL ROUTINE FLOW CHART