Int. J. Environ. Sci. Technol. (2015) 12:603–616
DOI 10.1007/s13762-014-0706-9

ORIGINAL PAPER

Photocatalytic degradation of tetracycline using nanosized titanium dioxide in aqueous solution

G. H. Safari · M. Hoseini · M. Seyedsalehi · H. Kamani · J. Jaafari · A. H. Mahvi

Received: 6 January 2014 / Revised: 7 October 2014 / Accepted: 27 October 2014 / Published online: 15 November 2014
© Islamic Azad University (IAU) 2014

Abstract The aim of the study was to investigate the degradation kinetics of tetracycline antibiotic by nanosized titanium dioxide under ultraviolet irradiation. Enhancement of photocatalysis by addition of Hydrogen peroxide was also evaluated. Various experimental parameters such as initial tetracycline concentrations, initial titanium dioxide concentration, initial pH, reaction times, initial Hydrogen peroxide concentrations, as well as water matrix using ultrapure water, drinking water and secondary effluent were investigated. The initial rate of photocatalytic degradation of tetracycline well fitted the Langmuir–Hinshelwood kinetic model ($R^2 = 0.9926$) with a reaction rate constant of 1.4 mg/L min. The degradation rate depended on initial tetracycline concentration and initial pH. The degradation rate also increased with higher titanium dioxide density and reached a plateau at titanium dioxide concentration of 1.0 g/L. The tetracycline degradation rate was higher in drinking water compared to ultrapure water. The addition of Hydrogen peroxide to titanium dioxide suspension significantly enhanced the tetracycline degradation rate and substantially reduced the time required to degrade 100 % of tetracycline. Changes of chemical oxygen demand values during photolysis indicated that tetracycline transformed into intermediate products without complete mineralization. The ultraviolet visible spectra obtained before and after ultraviolet irradiation in the presence of titanium dioxide can indicate the formation of 4a,12a-anhydro-4-oxo-4- dimethylaminotetracycline.

Keywords Advanced oxidation process · Hydrogen peroxide · Kinetics · Photocatalysis · Ultraviolet radiation

G. H. Safari · M. Hoseini · H. Kamani · J. Jaafari · A. H. Mahvi (✉)
School of Public Health, Tehran University of Medical Sciences, Tehran, Iran
e-mail: ahmahvi@yahoo.com

M. Hoseini
Department of Environmental Health Engineering, School of Health, Shiraz University of Medical Sciences, Shiraz, Iran

M. Seyedsalehi
Department of Environmental Engineering, Science and Research Branch, Islamic Azad University, Tehran, Iran

H. Kamani
Health Promotion Research Center and School of Public Health, Zahedan University of Medical Sciences, Zahedan, Iran

A. H. Mahvi
Centers for Solid Waste Research, Institute for Environmental Research, Tehran University of Medical Sciences, Tehran, Iran

A. H. Mahvi
National Institute of Health Research, Tehran University of Medical Sciences, Tehran, Iran

Introduction

Over the past few years, antibiotics and their metabolites have been detected in surface water, ground water, wastewater, and drinking water at levels ranged from ng/L to μg/L (Kim and Tanaka 2009; Lopez-Penalver et al. 2010). For instance, residual concentrations of antibiotics have been detected up to 6,000 ng/L in sewage treatment plant effluent, up to 1900 ng/L in surface water and up to 470 ng/L in ground water. The highest concentration of antibiotics detected in the aquatic environments is 28,000–31,000 μg/L. This was found in the effluent of a wastewater treatment plant that serves 90 pharmaceutical plants (Kummerer 2009). The

introduction of antibiotics residual into environment through various sources can lead to serious environmental problems including ecological and human health damages (Daghrir and Drogui 2013). Tetracyclines (TCs) are a large group of antibiotics with widespread use in human and veterinary medicine and account for approximately 29 % of total antibiotic use (Wammer et al. 2011). After medication, more than 70 % of TC antibiotics were released in active form into the environment (Daghrir and Drogui 2013). In recent years, the presence of TC in surface water and even in ground water has been also reported (Liu et al. 2012). For example, up to 20 mg/L of TC was detected in manure, and half of the 139 rivers surveyed in the USA had detection of antibiotics (Chang et al. 2014). The average concentration of TC, oxytetracycline (OTC), and chlortetracycline (CTC) reported in US surface water were 0.11, 1.34, and 0.15 μg/L, respectively (Lindsey et al. 2011). In addition, they have relatively long half-life, up to 180 days, depending on environmental conditions (Jiang et al. 2014). Most conventional wastewater treatment plants are inefficient in the removal of TC antibiotic (Homem and Santos 2011; Daghrir and Drogui 2013). Therefore, the development of new efficient approaches is required to decrease the TC antibiotic discharge into the environment. In general, advanced oxidation processes (AOPs) are the most efficient technology for degradation of various refractory pollutants in aqueous solutions and, during the last few decades, have been widely applied for removal of many organic pollutants such as ozonation (Khan et al. 2010), Fenton (Zgajnar Gotvajn et al. 2013), photo-Fenton (Liu et al. 2012), ultrasound waves (Mahvi 2009; Mahvi et al. 2009), sonochemical (Ifelebuegu et al. 2014), photosonochemical processes (Mahvi and Maleki 2010; Hoseini et al. 2013b), ultraviolet irradiation (Dobaradaran et al. 2010), and sulfate radical-based oxidation (Tay et al. 2013; Lin et al. 2014; Deng et al. 2014). In recent years, AOPs have been demonstrated to be an effective technology for the removal of pharmaceuticals, including TC antibiotics (Maroga et al. 2012). Among different AOPs, titanium dioxide (TiO_2) photocatalytic process is one of the most promising and emerging technology. TiO_2 photocatalytic process seems to have key advantages, such as operation at ambient conditions and lack of mass transfer limitations. The mechanism of this process includes the activation of a semiconductor (usually an inorganic semiconductor, such as TiO_2) via artificial light or sunlight (Homem and Santos 2011).

The objective of the present study was to evaluate the kinetics of TC degradation by UV irradiation, UV/TiO_2 and UV/TiO_2/H_2O_2 processes. Various experimental parameters such as initial TC concentration, initial TiO_2 concentration, initial pH, reaction time, initial H_2O_2 concentration as well as water matrix using ultrapure water, drinking water and secondary effluent were investigated. This study was performed at Department of Environmental Health Engineering, School of Public Health, Tehran University of Medical Sciences in 2013.

Materials and methods

Chemicals

Tetracycline hydrochloride ($C_{22}H_{24}O_8N_2{\cdot}HCl$) with a purity of over 95 % was purchased from Sigma-Aldrich (Munich, Germany) and was used without further purification. Chemical properties of tetracycline hydrochloride are shown in Table 1. TiO_2 (P25, Degussa AG, Dusseldorf, Germany) with a specific surface area of 50 ± 15 m^2/g, primary particle diameter of 21 nm, and a crystal distribution of 80 % anatase and 20 % rutile was purchased from Degussa (Germany). Hydrogen peroxide (30 % w/w) was purchased from R & M Marketing. All other chemicals used in this study were reagent grade and used without further purification. Analytic reagents were obtained from Merck. Double distilled water was used to prepare the solutions in all experiments. Stock solution of TC and other solutions were prepared in distilled deionized water and diluted as required.

Preparation of the synthetic solution and experimental procedure

TC stock solution (1,000 mg/L) was prepared weekly using distilled deionized water and stored in dark at 4 °C. All experiments were performed in laboratory scale and batch system and at constant temperature (25 °C) with 250 mL of TC solution in a 500-ml reactor. After adjusting the initial pH with 1 mol/L of H_2SO_4 or NaOH, solution was mixed with the required amount of TiO_2 and magnetically stirred for 30 min in the dark to ensure complete equilibration of adsorption/desorption of TC onto the TiO_2 surface (efficiency 8 ± 2 %). After that the UV lamp was turned on. UV irradiation was provided by an 18-W lamp emission at 254 nm (with intensity of 2,500 $\mu W/cm^2$), which was covered with a quartz tube and placed in the middle of the reactor. During photocatalytic experiments, temperature was maintained at 25 °C by using external water cooling around the reactor. Schematic of the experiment used in this study is shown in Fig. 1. At preselected intervals, 2 mL aliquots were taken, filtered through a membrane filter (0.22 μm), and mixed with 2 mL methanol to quench the reaction between $OH^{\cdot}$ radicals and the

Table 1 Chemical properties of tetracycline hydrochloride (Daghrir and Drogui 2013)

Molecule	Formula	Molecular weight (g/mol)	Solubility (mol/L)	pK_{a1}	pK_{a2}	pK_{a3}
TC	$C_{22}H_{24}O_8N_2{\cdot}HCl$	480.9	0.041	3.2 ± 0.3	7.78 ± 0.05	9.6 ± 0.3

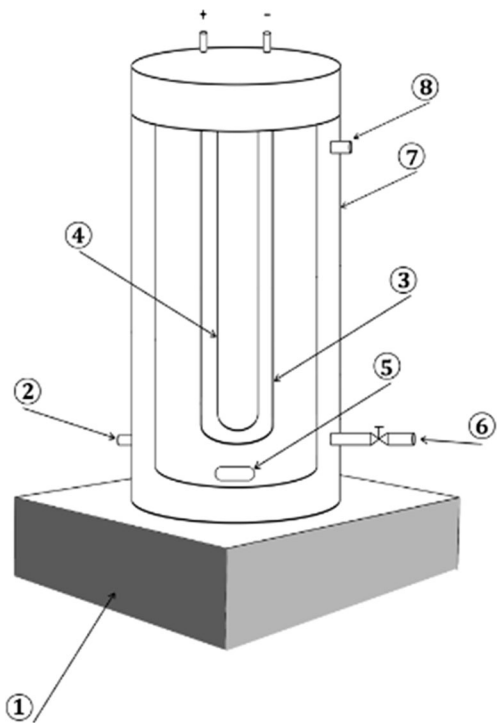

Fig. 1 Schematic of the experiment used in this study; (*1*) magnetic stirrer, (*2*) cooling water inlet, (*3*) quartz tube, (*4*) UV lamp, (*5*) stirrer bar, (*6*) sampling port, (*7*) outer jacket, and(*8*) cooling water outlet

remaining TC before analysis. All experiments were performed in duplicate, and values are represented as results with the standard error not exceeding 5 %. In aliquots containing H_2O_2, aliquot pH increased immediately after sampling above 10, in order for H_2O_2 degradation and minimized interference in the measurement. TC concentration was measured by a high performance liquid chromatography (HPLC) Shimadzu LC-20 AB pump and Shim-Pack VP-ODS-C18 column (250 × 4.6 mm, 5 ml) with a UV detector (Shimadzu UV-1600 spectrophotometer), flow rate of 1.0 mL/min, and injection volume of 20 µL. The mobile-phase acetonitrile/0.01 M oxalic acid solution (31:69, v/v) was used as eluent at the wavelength of 360 nm. Standard calibration showed good linearity ($R^2 > 0.999$) between the concentrations of TC and the peak area responses. The removal efficiency of TC was expressed using following equation:

$$\text{Removal efficiency} = \frac{C_0 - C_t}{C_0} \times 100\,\% \quad (1)$$

where C_0 and C_t are the concentrations of TC before and after photocatalytic reaction.

Results and discussion

Degradation of TC and COD removal under different oxidation systems

The results of TC degradation and COD removal under the optimum conditions by different systems at an initial TC concentration of 55 mg/L are shown in Fig. 2a, b, respectively. After UV irradiation time of 120 min, the degradation of TC reached to 23.8 % with 12.2 % removal of chemical oxygen demand (COD). This could be attributed to this fact that only a limited amount of $HO^{\cdot}$ is formed in the bulk solution in the presence of UV alone, and presumably, the removal efficiency was due to direct photolysis or hydrolysis of antibiotic. This result is similar to the results reported by Kim et al. (2009) and Gao et al. (2012), who studied degradation of amoxicillin, ampicillin, cloxacillin, sulfamethoxazole, and TC antibiotics by UV process. However, in the presence of TiO_2, much faster degradation of TC (83.2 %) and higher mineralization level (50.2 % removal of COD) occurred compared to UV irradiation only. This could be mainly due to the active species produced during the photocatalytic process such as $OH^{\cdot}$ radical, hole and superoxide ion. Some researchers studied the application of UV/TiO_2 for degradation of TC antibiotics and concluded that this process was very efficient. Addamo et al. (2005), who studied the application of this process for TC removal from aqueous solution, reported that TC removal efficiency above 98 % was obtained after 120 min with 100 % removal of total organic carbon. Reyes et al. (2006), who studied TC photodegradation, reported 100 % of TC degradation after 120 min with higher mineralization level (90 %). It has been shown by Bu and Zhuang (2013) that photocatalytic processes could be effective to remove more than 80 % of chlortetracycline. These results are similar with those obtained by Palominos et al. (2009), who studied degradation of TC using photocatalysis process. The degradation rate of TC was high (100 %) with 50 % of mineralization. The addition of H_2O_2 to TiO_2 suspensions leads to 100 % of TC degradation and 73.7 % of COD removal after 30 and 120 min, respectively. It practices as an electron acceptor from conduction band of semiconductor (TiO_2) to

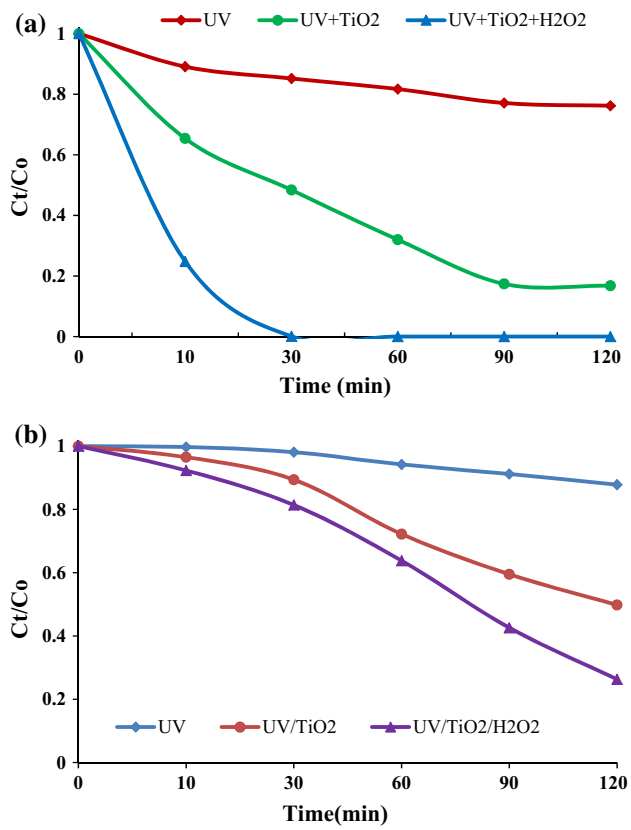

Fig. 2 **a** Degradation of TC **b** removal of COD under different oxidation systems ([TC] = 55 mg/L; [TiO_2] = 1 g/L; [H_2O_2] = 100 mg/L; [COD] = 90 mg/L; pH 5; lamp power: 18 W)

produce additional $OH^{\cdot}$ radicals (Elmolla and Chaudhuri 2010b). However, the results of COD removal efficiency suggested that complete mineralization of TC did not occur in the processes but transformed to byproducts, and TC was not completely decomposed to harmless inorganic ions. Therefore, a subsequent treatment is required for complete removal of the TC byproducts. However, there are distinct differences in the COD removal efficiencies of antibiotics using photocatalysis processes. This difference can be partly due to the molecular structure properties of antibiotics. In addition, the different experimental conditions may also lead to the different COD removal efficiencies of antibiotics using photocatalysis processes. It was clear that UV/TiO_2/H_2O_2 process was the best and efficient treatment method for 100 % removal of TC with high mineralization level.

Kinetic study of TC degradation by UV/TiO_2 process

Kinetic study could be useful to investigate and understand the mechanisms of pollutant degradation. Several recent researches have reported that kinetics of the photocatalytic degradation of aqueous pollutants by TiO_2 follows the Langmuir–Hinshelwood (L–H) kinetic model (Lazar et al. 2012; Daghrir and Drogui 2013; Subramonian and Wu 2014). The kinetic model data were evaluated by regression analysis method using Excel software. The L–H kinetic model is expressed as the following equation:

$$r = -\frac{\mathrm{d}c}{\mathrm{d}t} k_{\mathrm{r}}\theta = \frac{k_r KC}{1 + KC} \tag{2}$$

where r is the reaction rate, k_r is the reaction rate constant, K is the reactant adsorption constant, θ is the fraction of the surface of TiO_2 covered by TC, and C is the concentration of TC at any time t. At low concentrations of TC and weak adsorption (KC $\ll$ 1), Eq. (2) can be simplified to a pseudo-first-order kinetic model as following equation:

$$r = -\frac{\mathrm{d}c}{\mathrm{d}t} k_{\mathrm{r}} KC = k_0 t \tag{3}$$

where $k_0 = k_r\ K$.

The integration of Eq. (3) gives:

$$\ln \frac{C_0}{C_{\mathrm{t}}} = k_0 t \tag{4}$$

where C_0 is the initial concentration of TC, C_{t} is the concentration of TC at time t, k_0 is the pseudo-first-order reaction rate constant (min^{-1}), and t is the reaction time (min). The reaction rate constant (k) could be calculated from the slope of a plot of ln (C_0/C_{t}) versus (t). The influence of various parameters such as initial TC concentration, initial TiO_2 concentration, initial pH, and water matrix on the kinetic of TC degradation was investigated. The values of kinetic rate constants (k_0) related to the various parameters along with their regression coefficients R^2 are presented in Table 2. Higher correlation coefficients R^2 were acquired from the pseudo-first-order kinetic model at various initial TC concentrations. Therefore, the pseudo-first-order kinetic model well described the TC degradation using UV/TiO_2 process. In addition, the higher concentrations of pollutant influence the kinetic degradation (Wang et al. 2009). The photocatalytic degradation rate of TC could be expressed as a function of concentration as the following equation:

$$r_0 = \frac{k_{\mathrm{r}} - KC_0}{1 + KC_0} \tag{5}$$

where r_0 is the initial rate of photocatalytic degradation of TC and C_0 is the initial concentration of TC. With increasing TC initial concentration from 27 to 103 mg/L,

Table 2 Influence of various parameters on the kinetic of TC degradation

Parameter	Value	Equation	k_0 (min^{-1})	R^2	$t_{1/2}$ (min)*
TC concentration	27	y = 0.0249x + 0.1790	2.49×10^{-2}	0.9962	27.8
	55	y = 0.0163x + 0.2339	1.63×10^{-2}	0.9915	42.5
	74	y = 0.0133x + 0.2159	1.33×10^{-2}	0.9951	52.1
	103	y = 0.0110x + 0.1761	1.10×10^{-2}	0.9963	63.0
TiO_2 concentration	0.25	y = 0.0038x + 0.1653	0.38×10^{-2}	0.9501	182.4
	0.5	y = 0.0083x + 0.2028	0.83×10^{-2}	0.9856	83.5
	1	y = 0.0163x + 0.2339	1.63×10^{-2}	0.991	42.5
	1.5	y = 0.0153x + 0.2086	1.53×10^{-2}	0.9956	45.3
	2	y = 0.0156x + 0.2104	1.56×10^{-2}	0.9938	44.4
	5	y = 0.0163x + 0.2339	1.63×10^{-2}	0.9915	42.5
Initial pH	7	y = 0.0084x + 0.2297	0.87×10^{-2}	0.9953	82.5
	9	y = 0.0073x + 0.1910	0.83×10^{-2}	0.9906	94.9
	11	y = 0.0132x + 0.2534	1.34×10^{-2}	0.9926	52.5
Water matrix	UW	y = 0.0163x + 0.2339	1.63×10^{-3}	0.9915	42.5
	DW	y = 0.0227x + 0.2211	2.27×10^{-3}	0.9935	30.5
	SE	y = 0.0127x + 0.1822	1.27×10^{-3}	0.9971	54.5
H_2O_2 concentration	50	y = 0.0303x + 0.426	3.03×10^{-2}	0.9966	22.7
	75	y = 0.05x + 0.6444	5.0×10^{-2}	0.9993	13.8
	100	y = 0.0725x + 1.0217	7.25×10^{-2}	0.9994	9.5
	150	y = 0.0661x + 0.9232	6.66×10^{-2}	0.9905	10.5
	200	y = 0.0442x + 0.614	4.42×10^{-2}	0.9996	15.6

* $t_{1/2} = 0.693/k_0$

the degradation rate of TC increased from 0.6723 to 1.1227 mg/L min.

Influence of TiO_2 concentrations on TC degradation

Figure 3a shows the removal of TC at different concentrations of TiO_2 at pH 5 and TC concentration of 55 mg/L. It can be seen that the degradation rate constants increased with increasing TiO_2 density at range of 0.25–1 g/L and reached a plateau at TiO_2 concentration of 1.0 g/L. The increase of TC degradation with increasing the density of nanosized TiO_2 can be due to increased number of active sites, higher formation of $OH^{\cdot}$, and more effective interaction with the TC molecules. However, the degradation rate constants declined slightly at a very high concentration of 1.0 g/L. This can be due to reductive influence of light, enhancing dispersion of light or sedimentation and agglomeration of TiO_2 under larger catalyst loadings (Nosrati et al. 2012; Lazar et al. 2012). Furthermore, at a higher catalyst loading, most of the originally activated TiO_2 may be deactivated through collision with ground-state catalysts according to the following equation:

$$TiO_2 + TiO_2^{\#} \rightarrow TiO_2^{\#} + TiO_2 \quad (6)$$

where TiO_2 has active species adsorbed on its surface and $TiO_2^{\#}$ is the deactivated form of TiO_2 (Yang et al. 2008). In addition, accumulation and precipitation of TiO_2 under higher catalyst loadings lead to decreasing available catalyst surface for photon absorption and consequently degradation rate decreased. These results are in accordance with the results reported by other researchers who studied the effect of TiO_2 nanoparticles on the degradation of other organic pollutants in various AOPs (Mahvi et al. 2009; Dobaradaran et al. 2010; Elmolla and Chaudhuri 2010a; Hoseini et al. 2013a). In another study performed by Rizzo et al. (2009), amoxicillin was completely removed from urban wastewater treatment plant effluent using TiO_2 dosage of 0.8 g/L after 120 min of contact time. In another study performed by Michael et al. (2010), the researchers reported 60 % ofloxacin removal from wastewater samples using TiO_2 dosage of 3 g/L. Photoelectrocatalytic process has been applied by Palominos et al. (2009) to oxidize the antibiotic TC in aqueous suspension containing TiO_2 or ZnO under simulated solar light. In this study, the optimal oxidation conditions were 1.5 g/L for TiO_2 and 1.0 g/L for ZnO. In another study conducted by Yang et al. (2008), on

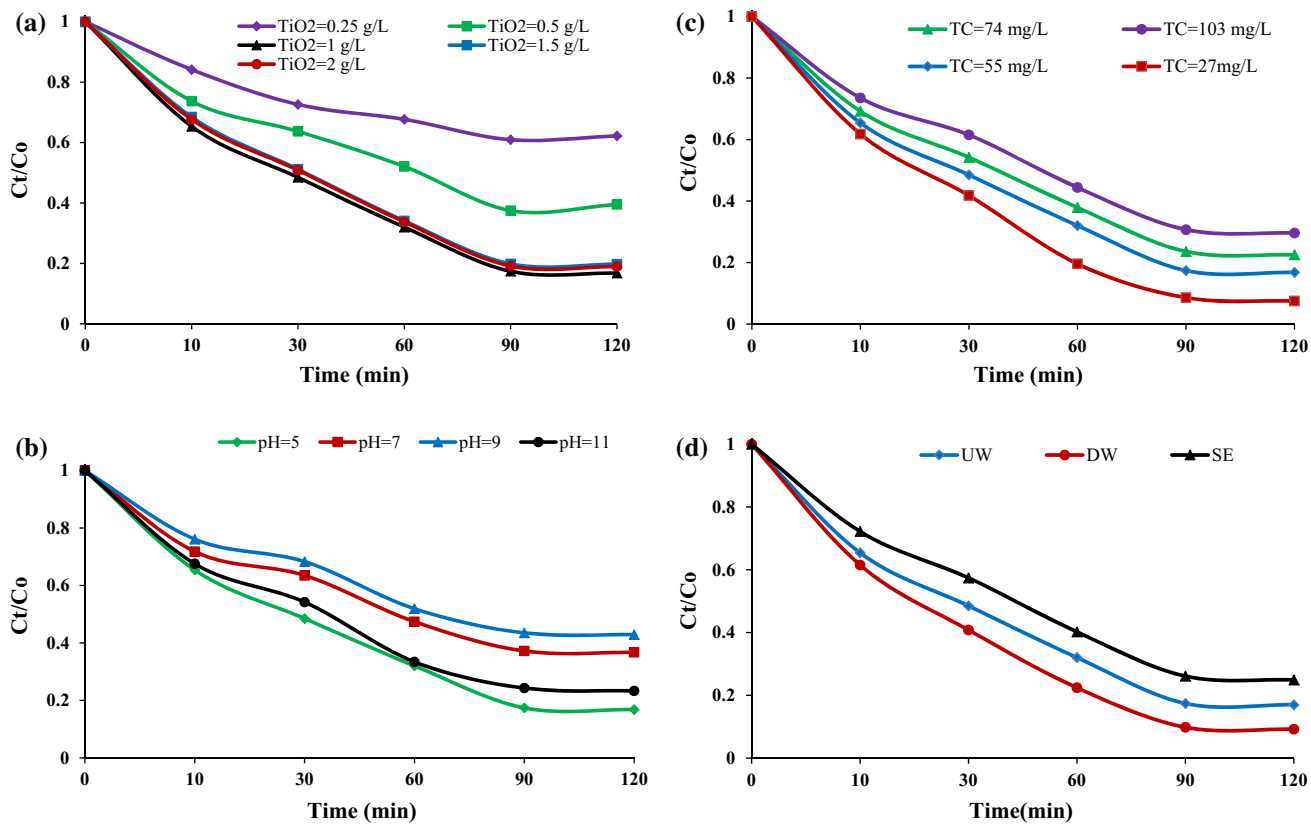

Fig. 3 Influence of **a** various concentrations of TiO_2 **b** initial pH **c** initial TC concentration **d** water matrix on TC degradation **a**: ([TC] = 55 mg/L; pH 5; lamp power: 18 W); **b**: ([TC] = 55 mg/L; [TiO_2] = 1 g/L; lamp power: 18 W); **c**: ([TiO_2] = 1 g/L; pH 5; lamp power: 18 W); **d**: ([TC] = 55 mg/L; [TiO_2] = 1 g/L; pH 5; lamp power: 18 W)

degradation of paracetamol in aqueous solutions by TiO_2 photocatalysis, the optimal TiO_2 loading was 0.8 g/L. So as the results showed, the optimum concentration of TiO_2 catalyst was 1 g/L.

Influence of initial pH on TC degradation

The initial pH is one of the most effective parameters in photocatalytic processes which influences on the degradation and adsorption capacity of the target organic compounds by influencing on the surface electrical charge characteristics of photocatalyst and dictates the ionization state of the catalyst surface. In order to evaluate the influence of initial pH on the removal efficiency, experiments were conducted in various concentrations of TC and pH in the range of 5–11. As shown in Fig. 3b, the removal efficiencies after 120-min irradiation were 83.4, 63.3, 57.1, and 76.7 % at pH 5, 7, 9, and 11, respectively. The results are in accordance with the results reported by Elmolla and Chaudhur (2010a), who studied photocatalytic degradation of amoxicillin, ampicillin, and cloxacillin antibiotics by UV/TiO_2 and UV/H_2O_2/TiO_2 processes. However, it is difficult to interpret the influence of pH value on photodegradation process due to its multiple roles. The pH value influences on the adsorption and dissociation capacity of compounds, the charge distribution on the catalyst surface, and the oxidation potential of the valence band of catalyst. Firstly, pH changes can influence the adsorption of TC molecules onto the TiO_2 surfaces. The pH point of zero charge (Pzc) of the TiO_2 (Degussa P25) is widely reported at pH $\sim$ 6.25. Thus, under pH $<$ Pzc, the positive charge of the TiO_2 surface increases with decreasing pH, and in pH $<$ Pzc, the negative charge of the TiO_2 surface increases with increasing pH (Ahmed et al. 2010). Secondly, $HO^{\cdot}$ radicals can be formed by the reaction between hydroxide ions and positive holes. The positive holes are as the main oxidation species at acidic pH, whereas $OH^{\cdot}$ radicals are as the major species at neutral or alkaline pH (Liu et al. 2006). Third, the TiO_2 particles in the aqueous solutions tend to agglomerate under acidic condition. Therefore, the surface available area of catalyst decreased for TC and photon adsorption (Zhu et al. 2013). On the other hand, it has been found that TC predominantly existed as positively charged molecule at acidic pH (Wang et al. 2011a, b, c). In acidic pH, both the TiO_2 surface and TC molecule are positively charged, and so, the adsorption

of TC on the surface of TiO_2 decreased at acidic pH. The high removal of antibiotics at acidic pH compared to that at neutral pH can be due to hydrolysis of antibiotics (Elmolla and Chaudhuri 2010a). In alkaline, pH both the TiO_2 surface and TC molecule are negatively charged, and thus, repulsive forces between the TiO_2 and TC are developed. Higher removal of TC in alkaline condition may be due to this fact that at alkaline pH and $OH^{\cdot}$ radicals were easier to be formed by oxidizing more hydroxide ions available on TiO_2 surface (Yang et al. 2008).

Influence of initial TC concentration on TC degradation

Figure 3c shows the influence of initial TC concentration on the removal efficiency of tetracycline. The results showed that the removal efficiency decreased with the increasing initial TC concentration. Irradiation of TC solution with the initial concentrations of 27, 55, 74, and 103 mg/L for 90 min leads to degradation of 91.4, 82.6, 76.4, and 69.3 % of TC, reflecting the low removal efficiency at higher TC concentrations. In order to quantitatively investigate the degradation rate of TC, the experimental data fitted by pseudo-first-order kinetics and the fitting results showed (Table 2) that TC degradation rate constants (k) were calculated to be 2.49×10^{-2}, 1.63×10^{-2}, 1.33×10^{-2}, and 1.1×10^{-2} min^{-1} at initial TC concentration of 27, 55, 74, and 103 mg/L, respectively. Increase of initial TC concentration leads to the decrease of the TC degradation rate constants. This could be due to the transition from the kinetic control regime at low concentrations to mass transfer limitations at high concentrations. Also at higher concentrations, because of increasing concentrations of intermediate products, hydroxyl radicals become the limiting reactant and so degradation rate constants decreased (Dimitrakopoulou et al. 2012). Moreover, with increasing the initial TC concentration, more TC molecules are adsorbed on the surface of TiO_2 nanoparticles. The high amount of adsorbed TC leads to an inhibitive influence on the reaction of TC molecules with photogenerated holes or hydroxyl radicals, due to the lack of any direct contact between them. This could be due to increase of internal optical density, which resulting the solution becomes impervious to UV light (Sin et al. 2011). Furthermore, increasing TC concentration leads to the absorption of light by the TC molecules, and thereby, the photons never reached the photocatalyst surface, and the photocatalytic removal efficiency decreased (Mohammadi et al. 2012). In addition, the reduction in removal efficiency with increasing initial TC concentration could be due to this fact that under the same conditions, the amount of reactive radicals formed was equal in all solutions; therfore, the reaction of TC molecules with radicals becomes more likely at lower TC concentrations. This can lead to a decrease in the degradation efficiency of TC molecules (Nosrati et al. 2012). These results are similar with results obtained by Gomez-Pacheco et al. (2012) and Jiao et al. (2008b), who studied the degradation of TC using UV irradiation concluded that the TC photolysis rate constants decreased with increase of the initial concentration of TC. In another study, Klauson et al. (2010), who studied amoxicillin (AMX) degradation in the range 10–100 mg/L with 1 g/L Degussa P25 under UV-A, reported that with increasing AMX concentration, degradation rate decreased from 90 to 30 % at 10 and 100 mg/L, respectively.

Influence of water matrix on TC degradation

In order to evaluate the influence of the water matrix on TC degradation, experiments were conducted with ultrapure water (UW), drinking water (DW), and secondary effluent (SE). Chemical characteristics of the water used in this study are listed in Table 3. The influence of water matrix on the removal efficiency of tetracycline is shown in Fig. 3d. The experimental data was fitted by pseudo-first-order kinetics, with a k value of 1.63×10^{-3}, 2.27×10^{-3}, and 1.27×10^{-3} min^{-1} in UW, DW, and SE, respectively (Table 2). The enhancement of removal efficiency of tetracycline in drinking water may be due to the presence of dissolved organic matter, which acts as photosensitizer and can induce either direct degradation of organic compounds via energy transferring or the formation of the reactive species such as radical. This result is similar to the results reported by Lopez-Penalver et al. (2010), and Gomez-Pacheco et al. (2012), who studied the degradation of tetracycline in aqueous solution by ultraviolet irradiation. They concluded that the photodegradation rate was higher in real water (surface and ground water) and lower in wastewater compared to ultrapure water. In another study, Jiao et al. (2008a, b), who studied the influence of humic acid (HA) on photocatalysis of TC and OTC, concluded that the removal efficiency of TC and OTC increased in the presence of HA with the concentration ranging from 0 to 7.5 mg/L. Also, the addition of dissolved organic carbon (DOC) leads to a higher degradation rate of atrazine compared to the experiment in deionized water (Ziegmann et al. 2006). The lower k value obtained for SE compared to UW may be due to high amount of organic matter, that act as radiation filter, prevent the production of $OH^{\cdot}$ radicals, and so decreased the degradation rate constant (Vione et al. 2006). This was verified by the lower detected transmittance ($T = 61.6$ %) in SE, and this absorption of UV irradiation substantially decrease the number of photons contacting the TC. In this case, the organic matter present in SE acts as a filter for UV irradiation, decreasing the removal

efficiency of TC. In addition, hydroxyl radicals can be scavenged by high concentrations of bicarbonates and chlorides present in SE to form the respective radicals, which are lower than the oxidation potential of hydroxyl radicals (Sirtori et al. 2010; Zacharakis et al. 2013). These results are similar with those obtained by Dimitrakopoulou et al. (2012), who studied degradation of amoxicillin by UV-A/TiO_2 photocatalysis. They concluded that degradation rate of amoxicillin in secondary effluent (contains about 8 mg/L of organic matter, 180 mg/L bicarbonates and 220 mg/L chlorides) was lower than ultrapure water (Fig. 4).

Changes of ultraviolet visible (UV–Vis) spectra in the UV/TiO_2 process

In order to investigate the structural changes of TC, the UV–Vis spectra obtained before and after UV irradiation are shown in Fig. 4. The UV–Vis spectra obtained before irradiation of TC show two major absorption bands at 275 and 360 nm. The absorption of TC in 360 nm was originated from aromatic rings B–D, including the developed chromophores (Wang et al. 2011b, c). This absorption band slowly reduced with the irradiation time, which indicated that the fragmentation of phenolic groups attached to aromatic ring B (Wang et al. 2011c; Zhu et al. 2013). The decay of absorbance at 270 nm band was ascribed to the production of acylamino and hydroxyl groups (Zhu et al. 2013). Furthermore, the reduction of absorption at 360 nm band associated with a very small absorption in the visible region that can be attributed to the forming of 4a,12a-anhydro-4-oxo-4-dedimethylaminotetracycline according to Fig. 5 (Addamo et al. 2005):

Photodegradation of TC occurs easily and is transformed to many degradation compounds. Side-chain degradation by deamination, desulfurization and dealkylation is typical of most photolysis processes. Photodeamination occurs after the TC exposure to UV irradiation. The removal of volatile dimethylamine needs the loss of only 2 carbon atoms according to the 22 atoms of tetracycline (Addamo et al. 2005). Addamo et al. (2005) reported 4a,12a-anhydro-4-oxo-4-dedimethylaminotetracycline as a major degradation product of TC photolysis by UV, whereas Jeong et al. (2010) proposed products resulting from the loss of $-NH_2$ from the 2-carboxamide group and demethylation from the dimethylamine group at C-4, followed by loss of –OH at C-3.

Influence of H_2O_2 addition to TiO_2 suspensions

The addition of H_2O_2 to TiO_2 suspensions lead to increase the degradation rate of TC, substantially decreasing the time required to 100 % degradation of the TC. It appears that H_2O_2 play a dual role in the photocatalytic degradation process. It practices as an electron acceptor from conduction band of semiconductor (TiO_2) to produce additional $OH^{\cdot}$ radicals according to the following equation:

$$H_2O_2 + e^- \rightarrow OH^{\cdot} + OH^- \quad (7)$$

Moreover, it produces hydroxyl radicals according to the following equation (Elmolla and Chaudhuri 2010b):

$$H_2O_2 + O_2^{\cdot -} \rightarrow OH^{\cdot} + OH^- + O_2 \quad (8)$$

The results presented in Table 2 show that by increasing H_2O_2 concentration in the range of 50–100 mg/L, degradation rate constants (k_0) increased. This is due to this fact that H_2O_2 acts as the limiting reactant at relatively low concentrations. The 100 % degradation of all initial TC concentrations was obtained at H_2O_2 concentration of 100 mg/L after 30 min. With increasing H_2O_2 concentration above 100 mg/L, degradation rate constants (k_0) decreased. This could be due to the recombination of $OH^{\cdot}$ radicals and the reaction between them and excess H_2O_2 for H_2O formation according to the following equations (Lopez-Penalver et al. 2010). The influence of various concentrations of H_2O_2 on the TC degradation is shown in Fig. 6.

$$OH^{\cdot} + OH^{\cdot} \rightarrow H_2O_2 \quad (9)$$

$$OH^{\cdot} + HO_2^{\cdot} \rightarrow H_2O + O_2 \quad (10)$$

$$OH^{\cdot} + H_2O_2 \rightarrow H_2O + HO_2^{\cdot} \quad (11)$$

$$H_2O_2 + h^+ \rightarrow H^+ + HO_2^{\cdot}. \quad (12)$$

Table 3 Chemical characteristics of the waters used in this study

Parameters	Drinking water (DW)	Secondary effluent (SE)	Ultrapure water (UW)
pH	7.8	8	6.6
Conductivity (μS/cm)	334	855	0.067
COD (mg/L)	ND	24	0
HCO_3^- (mg/L)	63	156	0
Cl^- (mg/L)	5.8	92	0
SO_4^{2-} (mg/L)	47	74	0
NO_3^- (mg/L)	<5	23	0
NO_2^- (mg/L)	<0.1	48	0
Ca^{2+}	68	88	0
Mg^{2+}	11.5	54	0
T* (%)	97.6	61.6	100

* Transmittance (%) at 254 nm

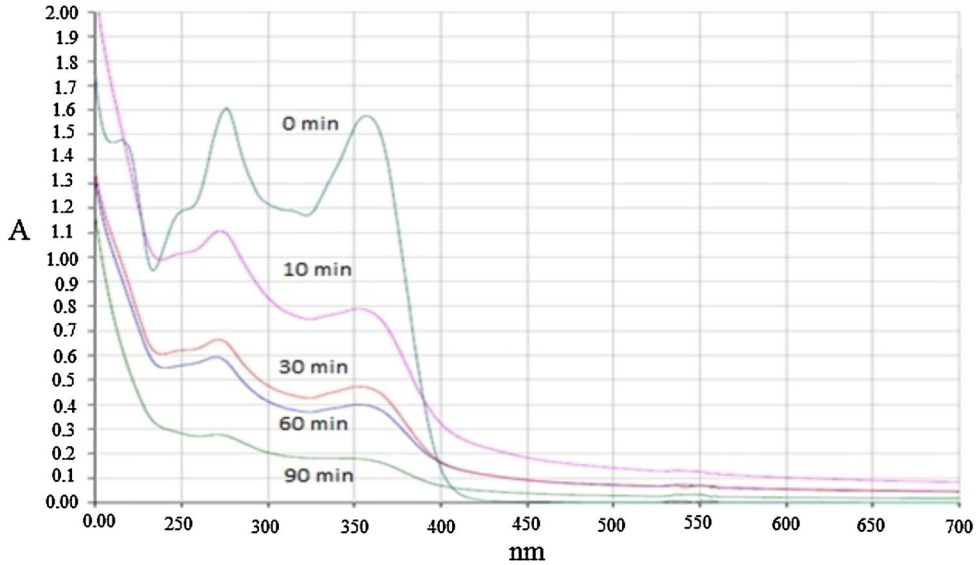

Fig. 4 Changes of UV–Vis spectra of 55 mg/L aqueous solution of tetracycline during photocatalytic process of UV/TiO_2 with irradiation time 0, 10, 30, 60, and 90 min, respectively

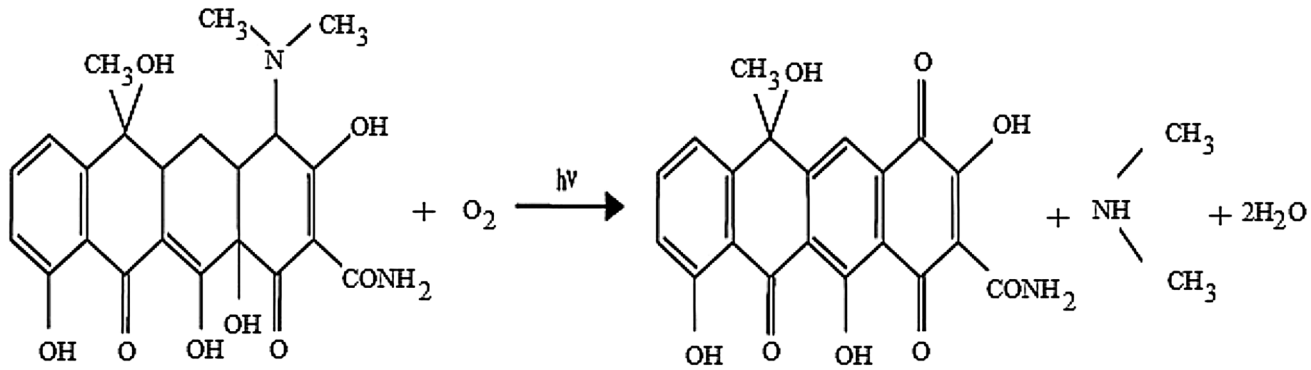

Fig. 5 Photodegradation of TC into 4a, 12a-anhydro-4-oxo-4-dedimethylaminotetracycline

The comparison between current and earlier research on TC photocatalytic degradation using TiO_2, the future trends and perspectives

An overview of the works published on TC degradation by photocatalysis processes along with present work is presented in Table 4. As clearly seen in Table 4, UV/TiO_2 process has a good ability for efficient TC degradation but this is not necessarily accompanied with total mineralization. Therefore, a subsequent treatment is required for complete removal of the TC byproducts. However, there are distinct differences in the performance of photocatalysis processes presented in Table 4. The effectiveness of photocatalytic processes using TiO_2 depends on TiO_2 concentration, light wavelength and intensity, the initial pH, reaction time, and initial TC concentration. These differences can be partly due to the various operational parameters in each study. Therefore, the different experimental conditions can lead to the different removal efficiencies of antibiotics using photocatalysis processes. It is obvious from Table 4 that among these processes, UV/TiO_2/H_2O_2 process is the best and efficient treatment method for 100 % removal of TC with 74 % chemical oxygen demand removal. By reviewing recent advances in this area and to improve the TC degradation using photocatalysist, it is suggested that future studies should focus on the following topics:

1. Promotion of the photocatalytic activity of TiO_2 including the synthesis of mesoporous TiO_2 (Joo et al. 2012; Nakata and Fujishima 2012), the use of various TiO_2 morphologies (nanowires, nanotubes, and nanospheres; Sun et al. 2012), reduction of the agglomeration in TiO_2 powders (Li et al. 2010; Farbod and Khademalrasool 2011) and surface treatments of TiO_2 (Monllor-Satoca et al. 2011). Various TiO_2 morphologies or surface treatments on TiO_2 can be increased the photocatalytic degradation efficiency.

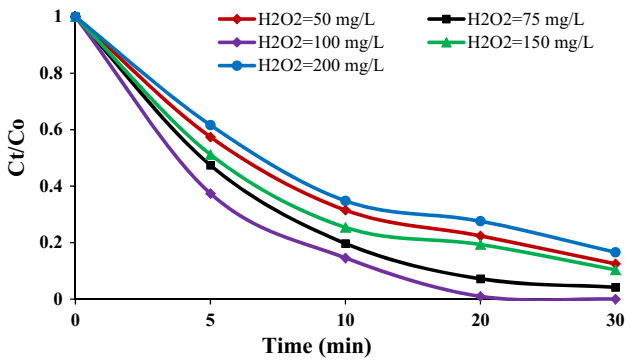

Fig. 6 Influence of various concentrations of H_2O_2 on the TC degradation ([TC] = 55 mg/L; [TiO_2] = 1 g/L; pH = 5; lamp power: 18 W)

2. Immobilization of TiO_2 on suitable support matrices (powder/pellet substrates, soft/thin materials or on rigid/thick substrates) to prevent the post-separation and recovery of the catalyst particles from the reaction mixture in aqueous slurry systems (Shan et al. 2010). However, there are several other advantages including higher surface area, excellent adsorption features and increasing surface hydroxyl groups or decreasing charge recombination in immobilized systems (Esparza et al. 2010; Jin and Dai 2012).
3. Recent innovations in the design of photocalatytic reactors in lab-scale including the use of energy-efficient UV/Vis light emitting diodes (LEDs) as light sources (Natarajan et al. 2011) the design of rotating disc-type reactor models (Chang and Wu 2010), the construction of TiO_2-immobilized catalytic beds and post-separation/reuse of TiO_2 powder catalysts (Rao et al. 2012). Reasonable designed photocatalytic reactors can reduce energy consumption or can prevent post-separation stages in photocatalytic processes.
4. Doping TiO_2 with metals or non-metals can decrease the band gap of the doped catalyst and makes possible the light absorption in the visible region. The improved catalysts seem to be photo-stable in aqueous solution and can be used in photocatalytic water purification (Kuvarega et al. 2011; Barolo et al. 2012).
5. Coupling TiO_2 photocatalysis with other treatment process such as electrocatalysis (Daghrir et al. 2012), sonocatalysis/Fenton process (Torres-Palma et al. 2010), biodegradation (Yahiat et al. 2011) and wetland technology (Chen et al. 2011) can be more advantageous; particularly in large-scale treatments. The combination of TiO_2 photocatalysis with any of these processes can not only improve the total performance of the degradation but also has the ability of treating great amounts of wastewater in real systems. Also, the

Table 4 Removal of tetracycline using different photocatalysis processes

TC concentration (mg/L)	Matrix	Photocatalysis process	Recommended operating conditions	Summary of results	Type of Tio_2	References
10–50	Distilled water	UV/TiO_2	0.4 and 1.0 g/L TiO_2; pH 6.0	More than 98 % degradation, 100 % of TOC removal after 120 min	TiO_2 Degussa P25 (BET specific surface area = 50 m^2/g, 80 % anatase, 20 % rutile) TiO_2 Merck (BET specific surface area = 10 m^2/g, 100 % anatase)	Addamo et al. (2005)
40	Distilled water	UV/TiO_2	0.5 g/L TiO_2; pH 6.0	100 % degradation and 90 % TOC removal using UV 254 nm; 50 % degradation and 10 % TOC removal using UV 365 nm after 120 min	TiO_2 Degussa P25 (BET specific surface area of 50 m^2/g, 80 % anatase and 20 % rutile)	Reyes et al. (2006)
20	Distilled water	UV/TiO_2	1.5 g/L TiO_2; pH 8.7	100 % degradation and 50 % TOC removal after 75 min	TiO_2 Degussa P25 (BET specific surface area of 52 m^2/g, 80 % anatase and 20 % rutile)	Palominos et al. (2009)
27–103	Distilled water	UV/TiO_2	1.0 g/L TiO_2; pH 5	More than 91.4 % of degradation after 90 min and 50 % COD removal after 120 min	TiO_2 Degussa P25 (BET specific surface area of 50 m^2/g, 80 % anatase and 20 % rutile)	Present work
		UV/TiO_2/H_2O_2	1.0 g/L TiO_2; pH 5; 100 mg/L H_2O_2	100 % degradation after 30 min and 74 % COD removal after 120 min		

coupling TiO_2 photocatalysis as a pre-treatment stage to enhance biodegradability and reduced toxicity with biological post-treatment can be more beneficial.

Conclusion

Photocatalytic degradation of tetracycline in aqueous solutions was investigated using TiO_2 as catalyst to determination of the optimal operation parameters. A slow reduction in tetracycline concentration was observed during the irradiation with UV alone after 120 min irradiation, indicating the influences of directs photolysis or hydrolysis. A more quickly degradation and efficient of tetracycline degradation occurred under UV irradiation in the presence of TiO_2. The initial rate of photocatalytic degradation of TC can be well explained by the L–H kinetic model ($R^2 = 0.9996$) with a reaction rate constant of 1.4 mg/L min. UV/TiO_2 process was effective for photodegradation of tetracycline in aqueous phase, especially at low tetracycline concentrations. The obtained degradation rate constants showed that the photodegradation process was pH-dependent. The degradation rate decreased between pH 5 and 9, but markedly increased with increasing pH between 9 and 11. The degradation rate constants also increased with higher TiO_2 density and reached a plateau at TiO_2 concentration of 1.0 g/L and declined slightly at a very much concentration of 1.0 g/L. The addition of H_2O_2 to TiO_2 suspension dramatically increased the tetracycline degradation rate and markedly decreased the time required to 100 % degradation of the initial tetracycline concentration. The degradation rate constants also increased with larger H_2O_2 concentration and reached a plateau at H_2O_2 concentration of 100 mg/L and decreased at concentrations above 100 mg/L. The tetracycline degradation rate was higher in drinking water than in ultrapure water, which could be due to the presence of dissolved organic matter, which acted as photosensitizer, hence improved indirect degradation of tetracycline through the radical species formation such as $OH^{\cdot}$. The lower rate constant (k_0) value obtained for secondary effluent compared to ultrapure water may be due to much value of organic matter, that act as irradiation filter, inhibit the generation of $OH^{\cdot}$ radicals, and so declined the degradation of tetracycline. Chemical oxygen demand values obtained at the end of the treatment indicated that complete mineralization of tetracycline did not occur but transformed to intermediate products and tetracycline was not completely degraded to harmless mineral ions. Hence, a subsequent treatment is necessary to complete degradation of the tetracycline byproducts. The UV–Vis spectra obtained before and after UV irradiation in the presence of TiO_2 indicated the reduction of absorption at 360 nm band related to a very small absorption in the visible region that can be attributed to the formation of 4a,12a-anhydro-4-oxo-4-dedimethylaminotetracycline.

Acknowledgments The financial and technical support of this research provided by Department of Environmental Health Engineering, School of Public Health, Tehran University of Medical Sciences under Grant No. 20501, gratefully acknowledged.

References

Addamo M, Augugliaro V, Di Paola A, Garcia-Lopez E, Loddo V, Marci G, Palmisano L (2005) Removal of drugs in aqueous systems by photoassisted degradation. J Appl Electrochem 35(7–8):765–774

Ahmed S, Rasul MG, Martens WN, Brown RJ, Hashib MA (2010) Heterogeneous photocatalytic degradation of phenols in wastewater: a review on current status and developments. Desalination 261(1–2):3–18

Barolo G, Livraghi S, Chiesa M, Paganini MC, Giamello E (2012) Mechanism of the photoactivity under visible light of N-doped titanium dioxide. Charge carriers migration in irradiated N-TiO_2 investigated by electron paramagnetic resonance. J Phys Chem C 116(39):20887–20894

Bu D, Zhuang H (2013) Biotemplated synthesis of high specific surface area copper-doped hollow spherical titania and its photocatalytic research for degradating chlorotetracycline. Appl Surf Sci 265(1):677–685

Chang CY, Wu NL (2010) Process analysis on photocatalyzed dye decomposition for water treatment with TiO2-coated rotating disk reactor. Ind Eng Chem Res 49(23):12173–12179

Chang PH, Li Z, Jean JS, Jiang WT, Wu Q, Kuo CY, Kraus J (2014) Desorption of tetracycline from montmorillonite by aluminum, calcium, and sodium: an indication of intercalation stability. Int J Environ Sci Technol 11:633–644

Chen KC, Wang YH, Lu YC (2011) Treatment of polluted water for reclamation using photocatalysis and constructed wetlands. Catal Today 175(1):276–282

Daghrir R, Drogui P (2013) Tetracycline antibiotics in the environment: a review. Environ Chem Lett 11(3):209–227

Daghrir R, Drogui P, Ka I, Khakani MA (2012) Photoelectrocatalytic degradation of chlortetracycline using Ti/TiO_2 nanostructured

electrodes deposited by means of a pulsed laser deposition process. J Hazard Mater 199(1):15–24

Deng J, Shao Y, Gao N, Deng Y, Tan C, Zhou S (2014) Zero-valent iron/persulfate(Fe_0/PS) oxidation acetaminophen in water. Int J Environ Sci Technol 11:881–890

Dimitrakopoulou D, Rethemiotaki I, Frontistis Z, Xekoukoulotakis NP, Venieri D, Mantzavinos D (2012) Degradation, mineralization and antibiotic inactivation of amoxicillin by UV-A/TiO_2 photocatalysis. J Environ Manag 98(1):168–174

Dobaradaran S, Nabizadeh R, Mahvi A, Mesdaghinia A, Naddafi K, Yunesian M, Rastkari N, Nazmara S (2010) Survey on degradation rates of trichloroethylene in aqueous solutions by ultrasound. Iran J Environ Health Sci Eng 7(4):307–312

Elmolla ES, Chaudhuri M (2010a) Comparison of different advanced oxidation processes for treatment of antibiotic aqueous solution. Desalination 256(1):43–47

Elmolla ES, Chaudhuri M (2010b) Photocatalytic degradation of amoxicillin, ampicillin and cloxacillin antibiotics in aqueous solution using UV/TiO_2 and UV/H_2O_2/TiO_2 photocatalysis. Desalination 252(1):46–52

Esparza P, Borges ME, Diaz L, Alvarez-Galvan MC, Fierro JLG (2010) Photodegradation of dye pollutants using new nanostructured titania supported on volcanic ashes. Appl Catal A 388(1):7–14

Farbod M, Khademalrasool M (2011) Synthesis of TiO_2 nanoparticles by a combined sol-gel ball milling method and investigation of nanoparticle size influence on their photocatalytic activities. Powder Technol 214(3):344–348

Gao YQ, Gao NY, Deng Y, Yang YQ, Ma Y (2012) Ultraviolet (UV) light-activated persulfate oxidation of sulfamethazine in water. Chem Eng J 195(1):248–253

Gomez-Pacheco C, Sanchez-Polo M, Rivera-Utrilla J, Lopez-Penalver J (2012) Tetracycline degradation in aqueous phase by ultraviolet radiation. Chem Eng J 187(1):89–95

Homem V, Santos L (2011) Degradation and removal methods of antibiotics from aqueous matrices—a review. J Environ Manag 92(10):2304–2347

Hoseini M, nabizadeh R, nazmara SH, Safari GH (2013a) Influence of under pressure dissolved oxygen on trichloroethylene degradation by the H_2O_2/TiO_2 process. J Environ Health Sci Eng 11(38):2–6

Hoseini M, Safari GH, Kamani H, Jaafari J, Ghanbarain M, Mhvi AH (2013b) Sonocatalytic degradation of tetracycline antibiotic in aqueous solution by sonocatalysis. Toxicol Environ Chem 95(10):1680–1689

Ifelebuegu AO, Onubogu J, Joyce E, Mason T (2014) Sonochemical degradation of endocrine disrupting chemicals 17b-estradiol and 17a-ethinylestradiol in water and wastewater. Int J Environ Sci Technol 11:1–8

Jeong J, Song W, Cooper WJ, Jung J, Greaves J (2010) Degradation of tetracycline antibiotics: mechanisms and kinetic studies for advanced oxidation/reduction processes. Chemosphere 78(5):533–540

Jiang WT, Chang PH, Wang YS, Tsai Y, Jean JS, Li Z (2014) Sorption and desorption of tetracycline on layered manganese dioxide birnessite. Int J Environ Sci Technol. doi:10.1007/s13762-014-0547-6

Jiao S, Zheng S, Yin D, Wang L, Chen L (2008a) Aqueous oxytetracycline degradation and the toxicity change of degradation compounds in photoirradiation process. J Environ Sci 20(7):806–813

Jiao S, Zheng S, Yin D, Wang L, Chen L (2008b) Aqueous photolysis of tetracycline and toxicity of photolytic products to luminescent bacteria. Chemosphere 73(3):377–382

Jin L, Dai B (2012) TiO_2 activation using acid-treated vermiculite as a support: characteristics and photoreactivity. Appl Surf Sci 258(8):3386–3392

Joo JB, Zhang Q, Dahl M, Lee I, Goebl J, Zaera F, Yin YD (2012) Control of the nanoscale crystallinity in mesoporous TiO_2 shells for enhanced photocatalytic activity. Energy Environ Sci 5(4):6321–6327

Khan MH, Bae H, Jung JY (2010) Tetracycline degradation by ozonation in the aqueous phase: proposed degradation intermediates and pathway. J Hazard Mater 181(1):659–665

Kim I, Tanaka H (2009) Photodegradation characteristics of PPCPS in water with UV treatment. Environ Int 35(1):793–802

Kim I, Yamashita N, Tanaka H (2009) Performance of UV and UV/H_2O_2 processes for the removal of pharmaceuticals detected in secondary effluent of a sewage treatment plant in Japan. J Hazard Mater 166(2):1134–1140

Klauson D, Babkina J, Stepanova K, Krichevskaya M, Preis S (2010) Aqueous photocatalytic oxidation of amoxicillin. Catal Today 151(1):39–45

Kummerer K (2009) Antibiotics in the aquatic environment—a review—part I. Chemosphere 75(4):417–434

Kuvarega AT, Krause RWM, Mamba BB (2011) Nitrogen/palladium-codoped TiO_2 for efficient visible light photocatalytic dye degradation. J Phys Chem C 115(45):22110–22120

Lazar MA, Varghese S, Nair SS (2012) Photocatalytic water treatment by titanium dioxide: recent updates. Catalysts 2(4):572–601

Li G, Lv L, Fan HT, Ma JY, Li YQ, Wan Y, Zhao XS (2010) Influence of the agglomeration of TiO_2 nanoparticles on their photocatalytic performance in the aqueous phase. J Colloid Interface Sci 348(2):342–347

Lin CC, Lee LT, Hsu LJ (2014) Degradation of polyvinyl alcohol in aqueous solutions using UV-365 nm/$S_2O_8^{-2}$ process. Int J Environ Sci Technol 11:831–838

Lindsey ME, Meyer M, Thurman E (2011) Analysis of trace levels of sulfonamide and tetracycline antimicrobials in groundwater and surface water using solid-phase extraction and liquid chromatography/mass spectrometry. Anal Chem 73(19):4640–4646

Liu CC, Hsieh YH, Lai PF, Li CH, Kao CL (2006) Photodegradation treatment of azo dye wastewater by UV/TiO_2 process. Dyes Pigments 68(2):191–195

Liu H, Yang Y, Kang J, Fan M, Qu J (2012) Removal of tetracycline from water by Fe-Mn binary oxide. J Environ Sci 24(2):242–247

Lopez-Penalver J, Sanchez-Polo JM, Gómez-Pacheco CV, Rivera-Utrilla J (2010) Photodegradation of tetracyclines in aqueous solution by using UV and UV/H_2O_2 oxidation processes. J Chem Technol Biotechnol 85(10):1325–1333

Mahvi AH (2009) Application of ultrasonic technology for water and wastewater treatment. Iran J Public Health 38(2):1–17

Mahvi AH, Maleki A (2010) Photosonochemical degradation of phenol in water. Desalin Water Treat 20(1–3):197–202

Mahvi AH, Maleki A, Rezaee R, Safari M (2009) Reduction of humic substances in water by application of ultrasound waves and ultraviolet irradiation. Iran J Environ Health Sci Eng 6(4):233–240

Maroga Mboula V, Hequet V, Gru Y, Colin R, Andres Y (2012) Assessment of the efficiency of photocatalysis on tetracycline biodegradation. J Hazard Mater 209(1):355–364

Michael I, Hapeshi E, Michael C, Fatta-Kassinos D (2010) Solar Fenton and solar TiO_2 catalytic treatment of ofloxacin in secondary treated effluents: evaluation of operational and kinetic parameters. Water Res 44(18):5450–5462

Mohammadi R, Massoumi B, Rabani M (2012) Photocatalytic decomposition of amoxicillin trihydrate antibiotic in aqueous solutions under UV irradiation using Sn/TiO_2 nanoparticles. Int J Photoenergy 2012 1:1–11

Monllor-Satoca D, Lana-Villarreal T, Gomez R (2011) Influence of surface fluorination on the electrochemical and photoelectrocatalytic properties of nanoporous titanium dioxide electrodes. Langmuir 27(24):15312–15321

Nakata K, Fujishima A (2012) TiO_2 photocatalysis: design and applications. J Photochem Photobiol C 13(3):169–189

Natarajan TS, Thomas M, Natarajan K, Bajaj HC, Tayade RJ (2011) Study on UV-LED/TiO2 process for degradation of rhodamine B dye. Chem Eng J 169(1–3):126–134

Nosrati R, Olad A, Maramifar R (2012) Degradation of ampicillin antibiotic in aqueous solution by ZnO/polyaniline nanocomposite as photocatalyst under sunlight irradiation. Environ Sci Pollut R 19(6):2291–2299

Palominos RA, Mondaca MA, Giraldo A, Penuela G, Perez-Moya M, Mansilla HD (2009) Photocatalytic oxidation of the antibiotic tetracycline on TiO_2 and ZnO suspensions. Catal Today 144(1):100–105

Rao NN, Chaturvedi V, Puma GL (2012) Novel pebble bed photocatalytic reactor for solar treatment of textile wastewater. Chem Eng J 184(1):90–97

Reyes C, Fernandez J, Freer J, Mondaca MA, Zaror C, Malato S, Mansilla H (2006) Degradation and inactivation of tetracycline by TIO_2 photocatalysis. J Photochem Photobiol A 184(1):141–146

Rizzo L, Meric S, Guida M, Kassinos D, Belgiorno V (2009) Heterogenous photocatalytic degradation kinetics and detoxification of an urban wastewater treatment plant effluent contaminated with pharmaceuticals. Water Res 43(16):4070–4078

Shan AY, Ghazi TIM, Rashid SA (2010) Immobilisation of titanium dioxide onto supporting materials in heterogeneous photocatalysis: a review. Appl Catal A 389(1–2):1–8

Sin JC, Lam SM, Mohamed AR, Lee KT (2011) Degrading endocrine disrupting chemicals from wastewater by TiO_2. Int J Photoenergy 2012 1:1–23

Sirtori C, Agüera A, Gernjak W, Malato S (2010) Influence of water-matrix composition on Trimethoprim solar photodegradation kinetics and pathways. Water Res 44(9):2735–2744

Subramonian W, Wu TY (2014) Effect of enhancers and inhibitors on photocatalytic sunlight treatment of methylene blue. Water Air Soil Pollut 225:1922

Sun X, Zhang J, Zhang G, Pan X, Huang T (2012) Preparation and characteristics of TiO2 nanotube catalysts used in hybrid photocatalysis/membrane process. Catal Commun 18(1):76–80

Tay KS, Rahman NA, Bin Abas MR (2013) Chemical oxidation of N, N-diethyl-m-toluamide by sulfate radical-based oxidation: kinetics and mechanism of degradation. Int J Environ Sci Technol 10:103–112

Torres-Palma RA, Nieto JI, Combet E, Petrier C, Pulgarin C (2010) An innovative ultrasound, Fe^{2+} and TiO_2 photoassisted process for bisphenol A mineralization. Water Res 44(7):2245–2252

Vione D, Falletti G, Maurino V, Minero C, Pelizzetti E, Malandrino M, Ajassa R, Olariu RI, Arsene C (2006) Sources and sinks of hydroxyl radicals upon irradiation of natural water samples. Environ Sci Technol 40(12):3775–3781

Wammer KH, Slattery MT, Stemig AM, Ditty JL (2011) Tetracycline photolysis in natural waters: loss of antibacterial activity. Chemosphere 85(9):1505–1510

Wang N, Li X, Wang Y, Quan X, Chen G (2009) Evaluation of bias potential enhanced photocatalytic degradation of 4-chlorophenol with TiO_2 nanotube fabricated by anodic oxidation method. Chem Eng J 146(1):30–35

Wang P, Yap PS, Lim TT (2011a) C–N–S tridoped TiO2 for photocatalytic degradation of tetracycline under visible-light irradiation. Appl Catal A 399(1):252–261

Wang Y, Zhang H, Chen L (2011b) Ultrasound enhanced catalytic ozonation of tetracycline in a rectangular air-lift reactor. Catal Today 175(1):283–292

Wang Y, Zhang H, Zhang J, Lu C, Huang Q, Wu J, Liu F (2011c) Degradation of tetracycline in aqueous media by ozonation in an internal loop-lift reactor. J Hazard Mater 192(1):35–43

Yahiat S, Fourcade F, Brosillon S, Amrane A (2011) Removal of antibiotics by an integrated process coupling photocatalysis and biological treatment—case of tetracycline and tylosin. Int Biodeterior Biodegrad 65(7):997–1003

Yang L, Yu LE, Ray MB (2008) Degradation of paracetamol in aqueous solutions by TiO_2 photocatalysis. Water Res 42(13):3480–3488

Zacharakis A, Chatzisymeon E, Binas V, Frontistis Z, Venieri D, Mantzavinos D (2013) Solar photocatalytic degradation of bisphenol A on immobilized ZnO or TiO_2. Int J Photoenergy 1:1–9

Zgajnar Gotvajn A, Bistan M, Tisler T, Englande AJ, Zagorc-Koncan J (2013) The relevance of bisphenol A adsorption during Fenton's oxidation. Int J Environ Sci Technol 10:1141–1148

Zhu XD, Wang YJ, Sun RJ, Zhou DM (2013) Photocatalytic degradation of tetracycline in aqueous solution by nanosized TiO_2. Chemosphere 92(8):925–932

Ziegmann M, Doll T, Frimmel FH (2006) Matrix influences on the photocatalytical degradation of dichloroacetic acid and atrazine in water. Acta Hydrochim Hydrobiol 34(1–2):146–154