NASA TM-85687

# NASA Technical Memorandum 85687

NASA-TM-85687 19840002470

PORTABLE DYNAMIC PRESSURE GENERATOR FOR STATIC AND DYNAMIC CALIBRATION OF IN SITU PRESSURE TRANSDUCERS

Pamela A. Bolt, Robert W. Hess, and William T. Davis

AUGUST 1983



National Aeronautics and
Space Administration

**Langley Research Center**
Hampton, Virginia 23665

# PORTABLE DYNAMIC PRESSURE GENERATOR FOR STATIC AND DYNAMIC CALIBRATION OF IN SITU PRESSURE TRANSDUCERS

Pamela A. Bolt, Robert W. Hess, William T. Davis
NASA Langley Research Center

## SUMMARY

A portable dynamic pressure generator was developed to meet the requirements of determining the dynamic sensitivities of in situ pressure transducers at low frequencies. The device is designed to operate in a frequency range of 0 to 100 Hz, although it was only tested up to 30 Hz, and to generate dynamic pressures up to 13.8 kPa (2 psi). A description of the operating characteristics and instrumentation used for pressure, frequency, and displacement measurements is given. The pressure generator was used to statically and dynamically calibrate transducers. Test results demonstrated that a difference can exist between the static and dynamic sensitivity of a transducer, confirming the need for dynamic calibrations of in situ pressure transducers.

## INTRODUCTION

It is difficult to dynamically calibrate pressure transducers which are permanently mounted in an airfoil. Historically, in situ static calibrations were performed to determine the static sensitivity while dynamic calibrations were limited to using a high frequency acoustic oscillator at pressure amplitudes of approximately 70 Pa (0.01 psi) or less. These frequencies and pressure amplitudes are too high and too low, respectively, for most pressure transducers. The requirement was established to develop a device and technique for measuring in situ transducers at higher pressure amplitudes and lower frequencies (ref. 1). This technique would have to establish that both static and dynamic sensitivities are the same for a particular transducer and determine if the mounting configuration of a transducer affects the phase response and pressure amplitudes. A portable dynamic pressure generator with a mass of 9 kgs was designed for this application. The major components of the system are a linear variable differential transformer (LVDT), hydraulic actuator, bellows, servo valve, servo control electronics, and calibration head (fig. 1). Both static and dynamic tests were performed to ensure that the device was capable of operating in a frequency range of 0 to 30 Hz at dynamic pressure amplitudes up to 13.8 kPa (2 psi).

## DESCRIPTION OF PORTABLE DYNAMIC PRESSURE GENERATOR

The control system consists of a servo amplifier which feeds a signal to the servo valve to control the displacement of the hydraulic actuator (fig. 2). When a dc signal is input to the servo valve, the hydraulic actuator is statically deflected a predetermined distance. An ac signal input causes the actuator to

oscillate which in turn oscillates the bellows to produce a dynamic pressure. Both pressure and displacement feedback are available as the primary feedback sensors to the servo amplifier regulating the system at a desired frequency without damaging the bellows or hydraulic actuator.

The LVDT is held to the support plate by a two-piece stainless steel fixture and contains a phosphorous bronze bushing cap for alinement of the rod. Two 3.1 cm (1.22 in.) diameter stainless steel end caps were brazed to the ends of the 2.08 cm (0.82 in.) I.D. bellows with a maximum stroke of 1.96 cm (0.77 in.). The 0.64 cm (0.25 in.) hydraulic actuator rod is connected to the moving end of the bellows as is a 1.8 cm (0.72 in.) diameter teflon plug. The plug reduces the bellows volume to maximize percent change in volume as well as prevents sagging of the bellows. The cap on the stationary end of the bellows contains an opening for a copper-constantan thermocouple inside the bellows and the two holes for (1) a transducer and (2) a fitting with 0.64 cm (0.25 in.) I.D. plastic tubing to the calibration head. The calibration head contains two ports for reference transducers and a larger 0.64 cm (0.25 in.) O-ring port which is securely held over the *in situ* pressure transducer or orifice. The 18.9 lpm (5 gpm) servo valve is mounted on a manifold where the hydraulic input/output lines are connected. The aluminum support plate for the oscillating pressure device includes keyways and platforms for precise alinement of the LVDT, hydraulic actuator, and bellows.

## CALIBRATION OF PRESSURE GENERATOR

A block diagram of the instrumentation used to calibrate the system and test transducers is shown in figure 3. The portable calibrator was first used to statically calibrate a ±13.8 kPa (±2 psid) pressure transducer selected as the reference transducer. A digital manometer, used for static testing only, having an uncertainty of 0.02% of f.s. was used as the pressure standard in this test. Both transducers were mounted in the stationary end plate of the bellows. The reference transducer was excited by a 10-volt power supply and its output measured with a digital voltmeter. The reference transducer was calibrated from 0 to ±13.8 kPa (±2 psi) in increments of 1.4 kPa (0.2 psi). The sensitivity of the reference transducer was 20.17 mV/kPa (139.05 mV/psi). The plot of the reference transducer calibration data was linear (fig. 4) and repeatable within 1%. The temperature inside the bellows was measured by a copper-constantan thermocouple. During the 20-minute test, the temperature gradually increased by 2 degrees kelvin which was negligible.

A static test provided data to establish the linear distance the LVDT sensor could move and not exceed preselected system peak-to-peak pressure limits while not overdriving the bellows assembly. A relationship between the LVDT deflection and the bellows pressure was developed using the servo control to adjust the LVDT deflection in increments of 0.05 cm (0.021 in.), which is equivalent to 1.4 kPa (0.2 psi), from 0 to 0.5 cm (0.2 in.) (fig. 5). The digital manometer was replaced by a plug in the end plate of the bellows and only the reference transducer was used. LVDT output as a function of pressure (kPa) is 0.29 mV/kPa (2 mV/psi). The bellows was oscillated at the minimum amount of compression stress. The pressure remained constant at approximately 3.8 kPa (0.55 psi) when the bellows was oscillated between 0.75 Hz and 25 Hz.

Both static and dynamic tests were performed to verify that the calibration head was a good location for the reference transducer in actual testing of *in situ*

pressure transducers. In order to simulate an *in situ* pressure transducer, a flat 8.5 cm (3.35 in.) square stainless steel plate was machined and a ±13.8 kPa (±2 psid) pressure transducer was flush mounted as the test transducer. The reference transducer was flush mounted in the 0.64 cm (0.25 in.) calibration head cavity. A short length of 0.64 cm (0.25 in.) I.D. tubing from the base of the calibration head provided a seal around the test transducer. Flexible tubing of length 76.2 cm (30 in.) and 0.64 cm (0.25 in.) I.D. was used to connect the calibration head to the bellows. Static tests were conducted over a pressure range up to ±10.3 kPa (±1.5 psi) in increments of 1.4 kPa (0.2 psi). For the dynamic testing, the bellows was oscillated over a frequency range of 4 to 30 Hz for 0 to ±6.9 kPa (0 to ±1 psi). The reference and test transducers' output were measured on a true RMS meter. Figure 6 is a plot of dynamic pressure vs. frequency for the reference and test transducers. The dynamic to static sensitivity ratio for the reference transducer was 1.000 and 0.996 for the test transducer. This verified that the pressures at the side and the base of the calibration head cavity were equal within experimental tolerances.

## CALIBRATION OF *IN SITU* PRESSURE TRANSDUCERS

Fifty-six permanently mounted pressure transducers on the top surface of a delta wing model (fig. 7) tested in the transonic dynamic tunnel were dynamically calibrated. The transducers were mounted under the wing surface with RTV. An aluminum cover plate with 0.132 cm (0.052 in.) diameter orifice was placed on the wing surface over each transducer (fig. 8). The reference pressure and corresponding *in situ* transducer outputs were measured on a true RMS meter. The pressure range was 0 to 4.1 kPa (0.6 psi) at 4 to 22 Hz. The results indicated that the transducers' installation did not affect the frequency response in a systematic manner. A distribution of the ratio of dynamic to static sensitivity for 56 pressure transducers is given in figure 9. The distribution indicates a ±5% difference between the static and dynamic sensitivities. These data show that, even for a small cavity as in this test, a static calibration is not always sufficient to provide accurate dynamic pressure measurements.

## CONCLUDING REMARKS

A portable dynamic pressure generator capable of producing pressures up to 13.8 kPa (2 psi) over a frequency range of 0 to 30 Hz has been developed. The components of the device are an LVDT, hydraulic actuator, bellows, servo valve, servo control, and calibration head. This device is designed to be used as a portable calibrator to determine the dynamic and static sensitivities of pressure transducers mounted in a model. The reference pressure transducer mounted in the calibration head provided accurate measurements when calibrating *in situ* pressure transducers. The accuracy of the system is equal to the accuracy of the reference transducer mounted in the calibration head. The capability of this portable pressure generator to dynamically and statically calibrate permanently mounted pressure transducers over a low frequency range at realistic pressure amplitudes has been demonstrated.

## REFERENCES

1. Hess, R. W.; Wynne, E. C.; and Cazier, F. W., Jr.: Static and Unsteady Pressure Measurements on a 50 Degree Clipped Delta Wing at M = 0.9. NASA TM 83297, 1982.

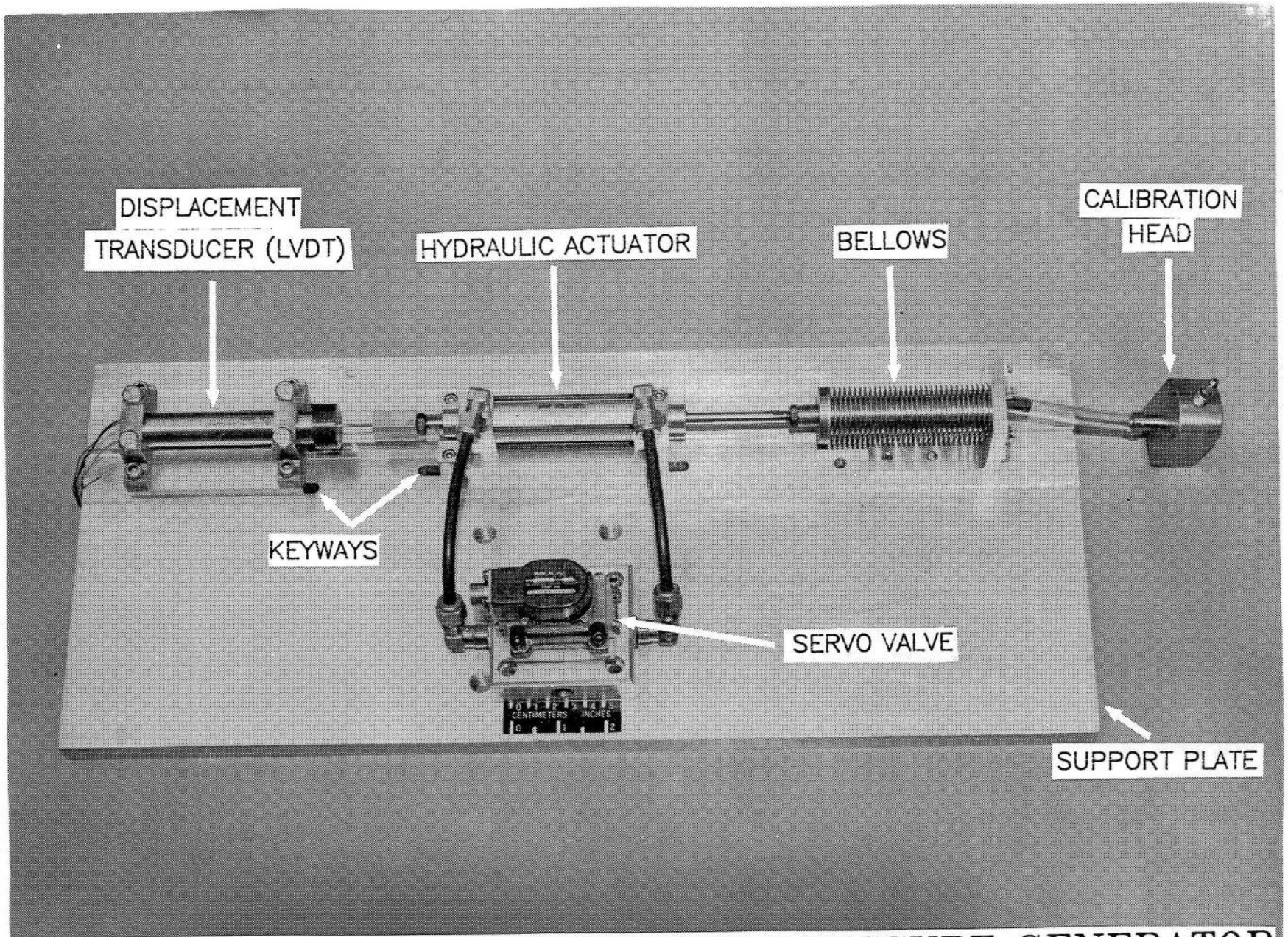


FIGURE 1 – PORTABLE DYNAMIC PRESSURE GENERATOR

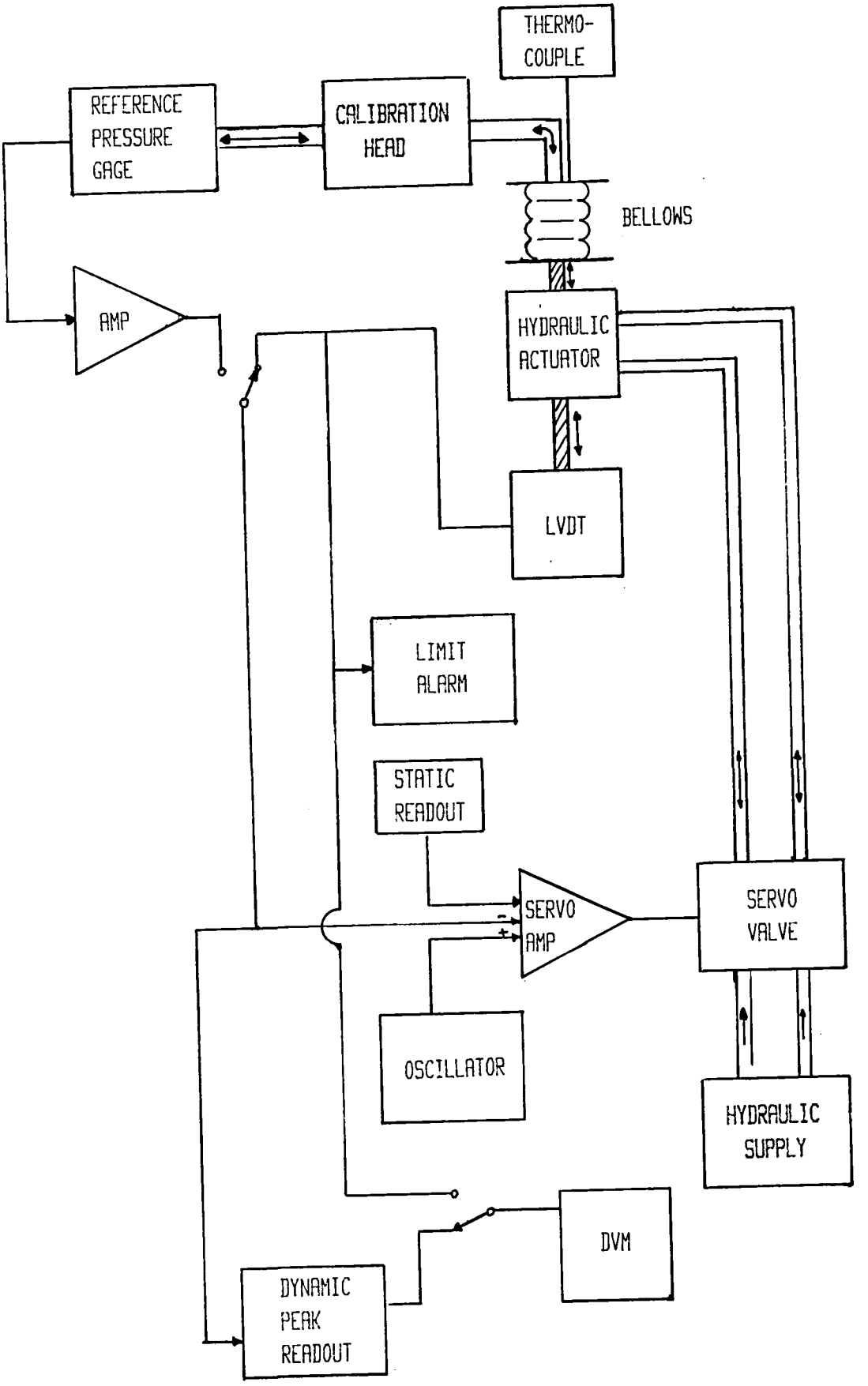


FIGURE 2 – PORTABLE DYNAMIC PRESSURE GENERATOR DIAGRAM

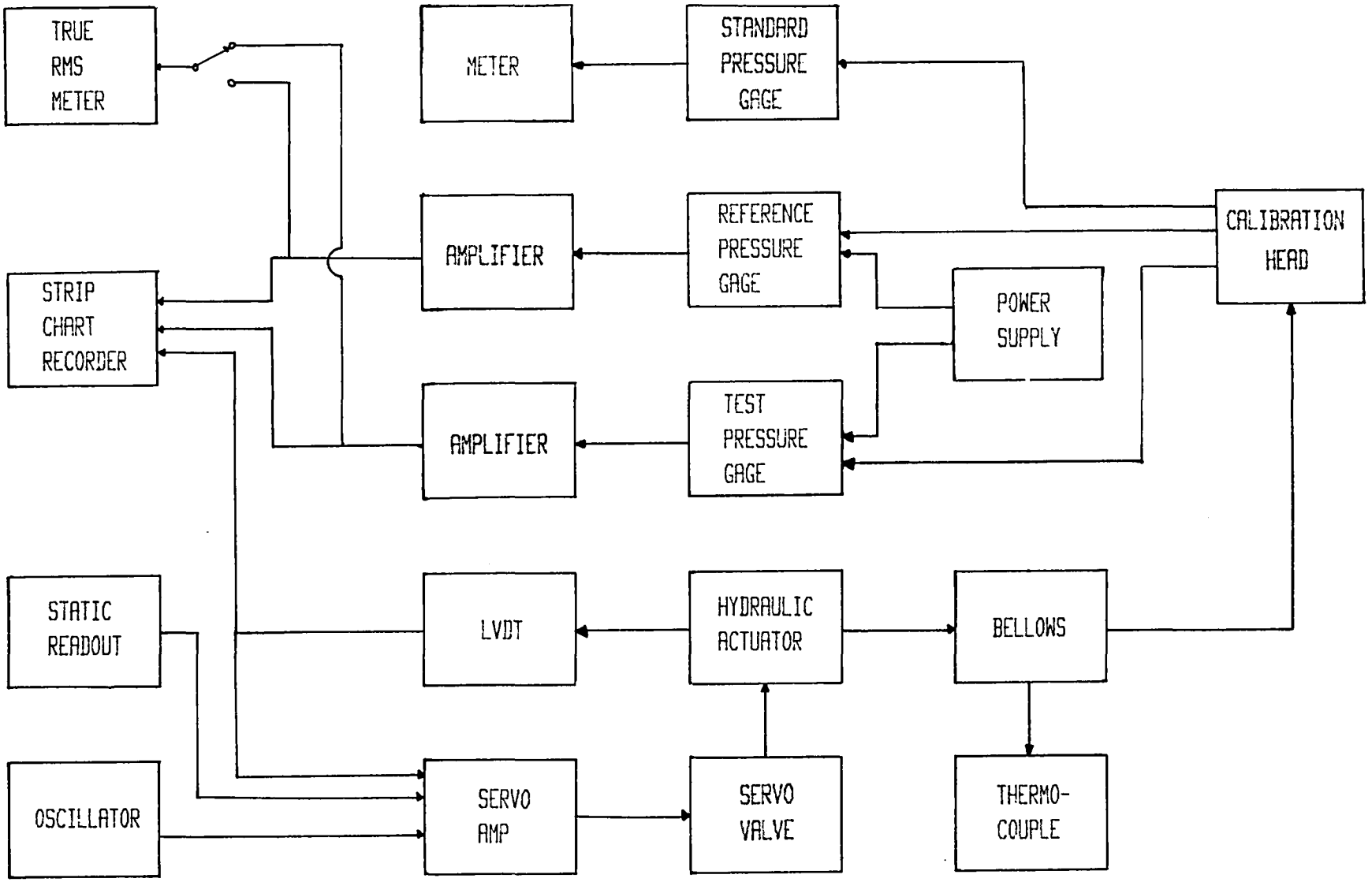


FIGURE 3 – INSTRUMENTATION SCHEMATIC

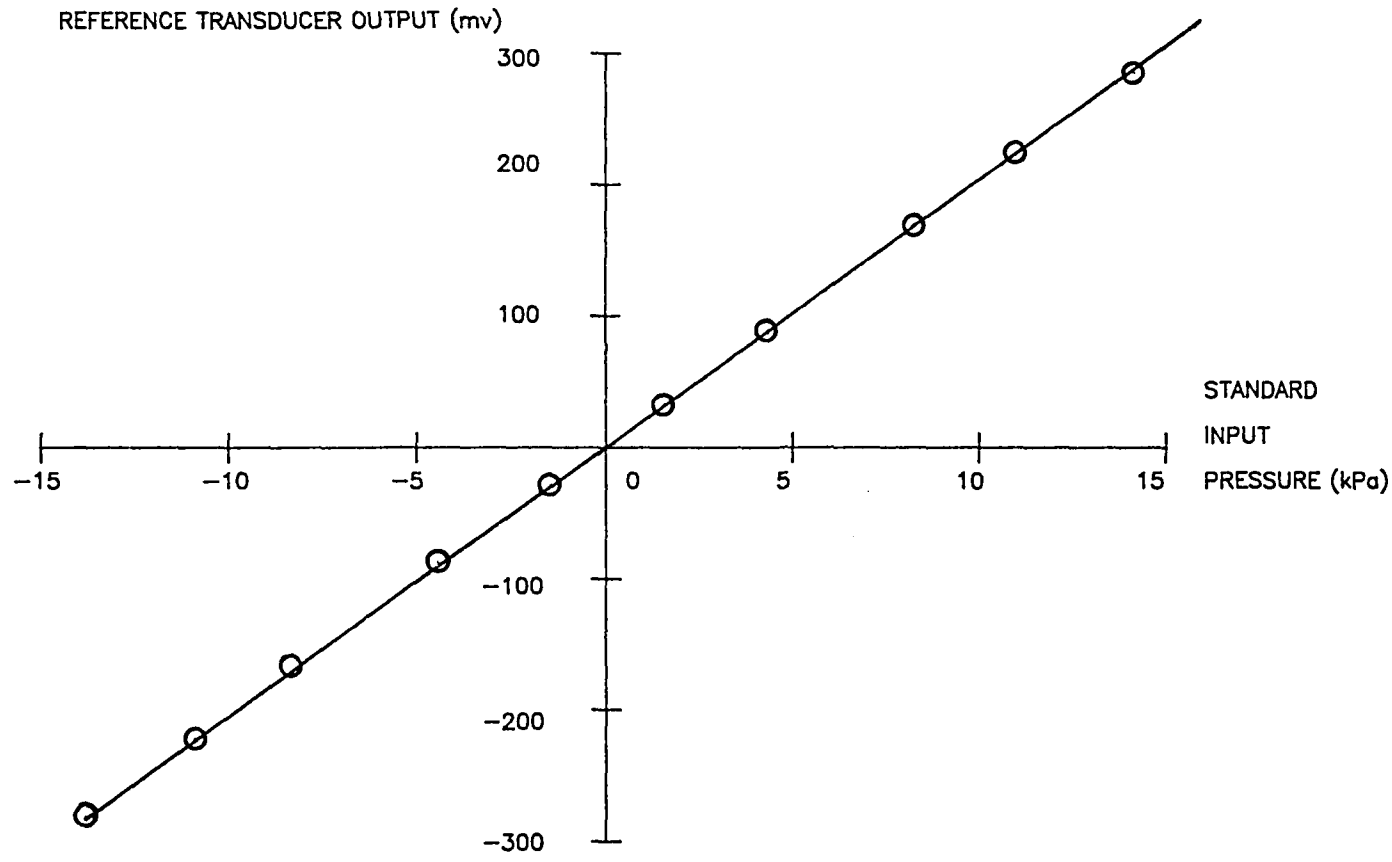


FIGURE 4 – STATIC CALIBRATION OF REF. TRANSDUCER

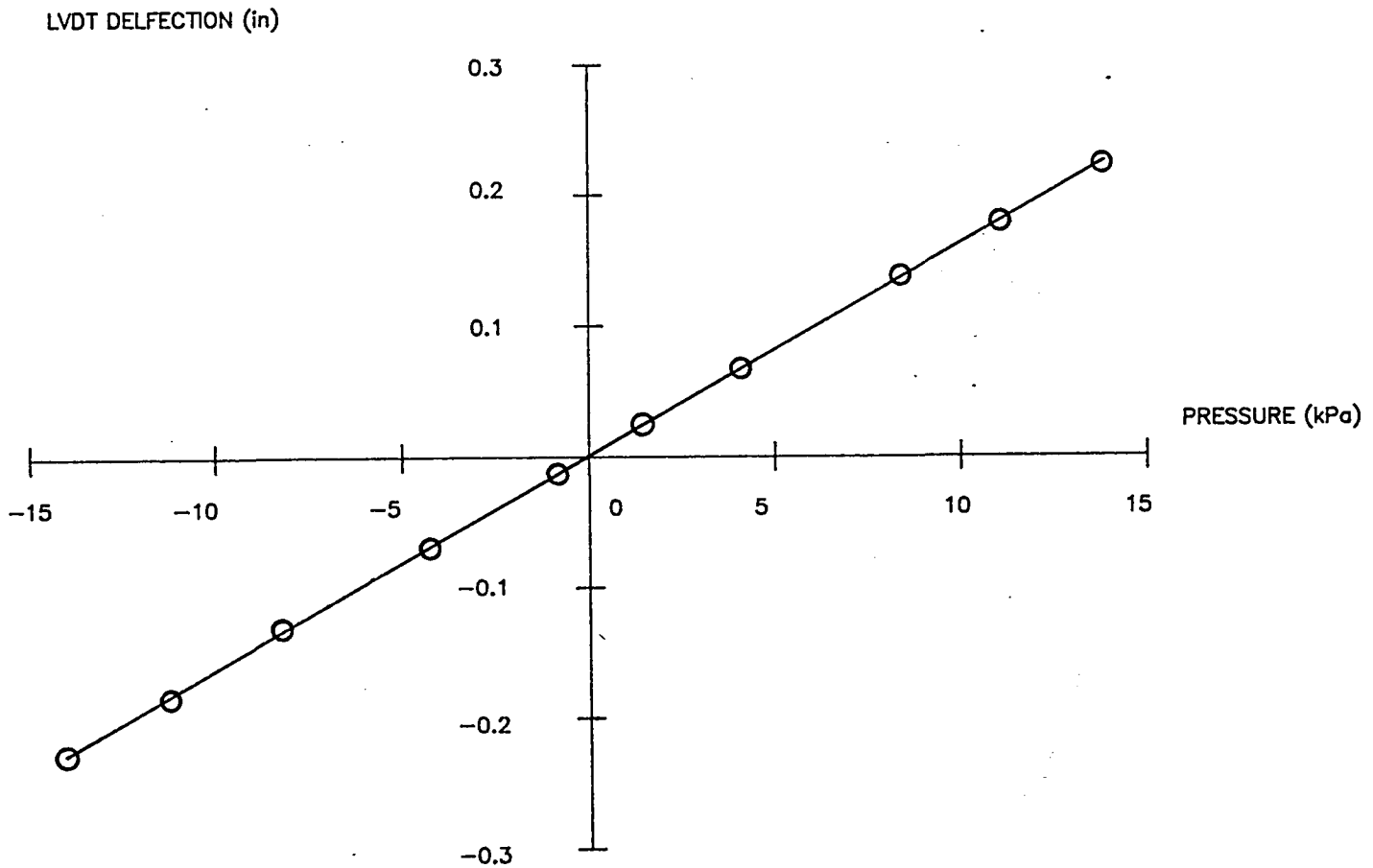


FIGURE 5 – LVDT DEFLECTION AS A FUNCTION OF PRESSURE

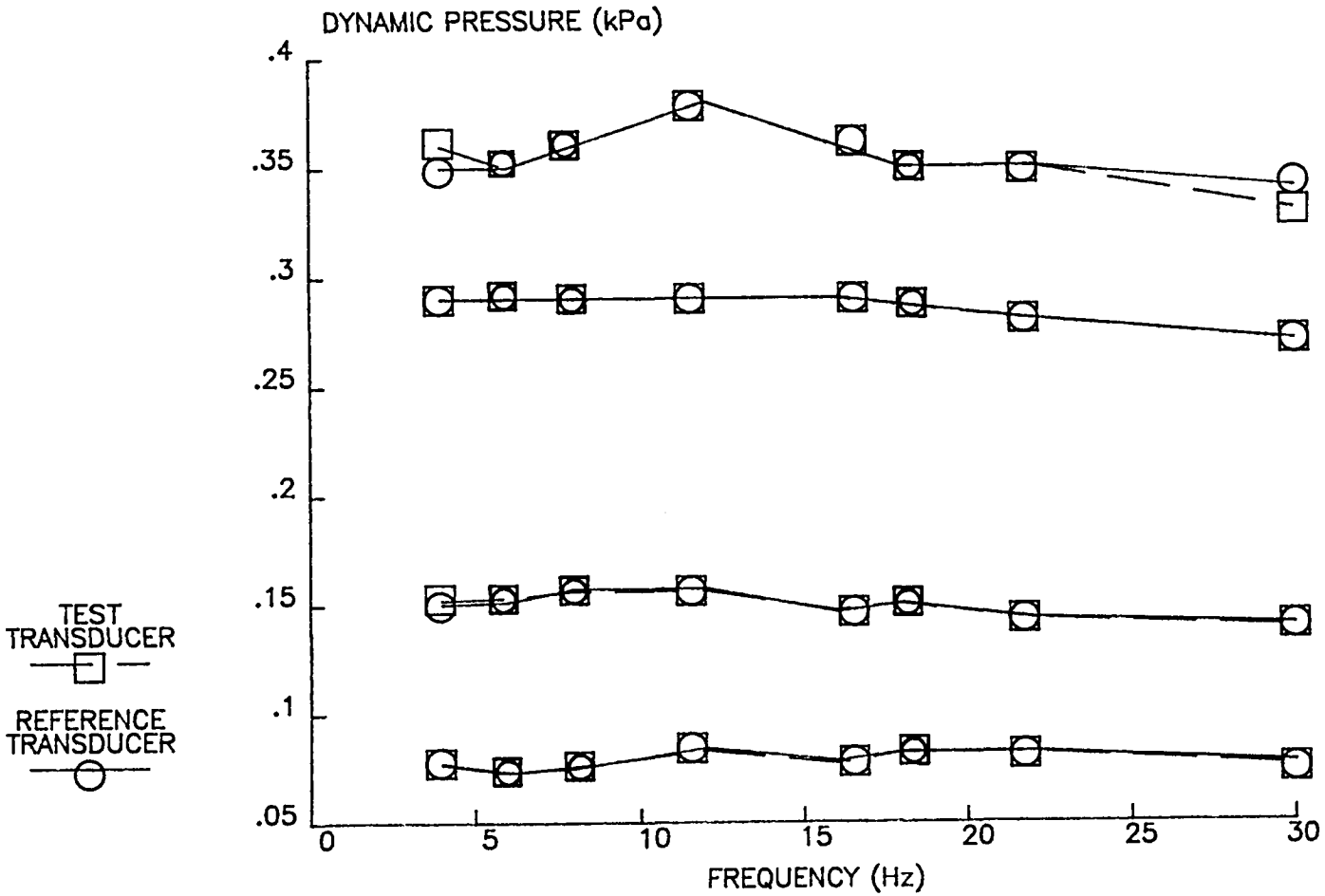


FIGURE 6 – DYNAMIC PRESSURE VS. FREQUENCY FOR THE REFERENCE AND TEST TRANSDUCERS

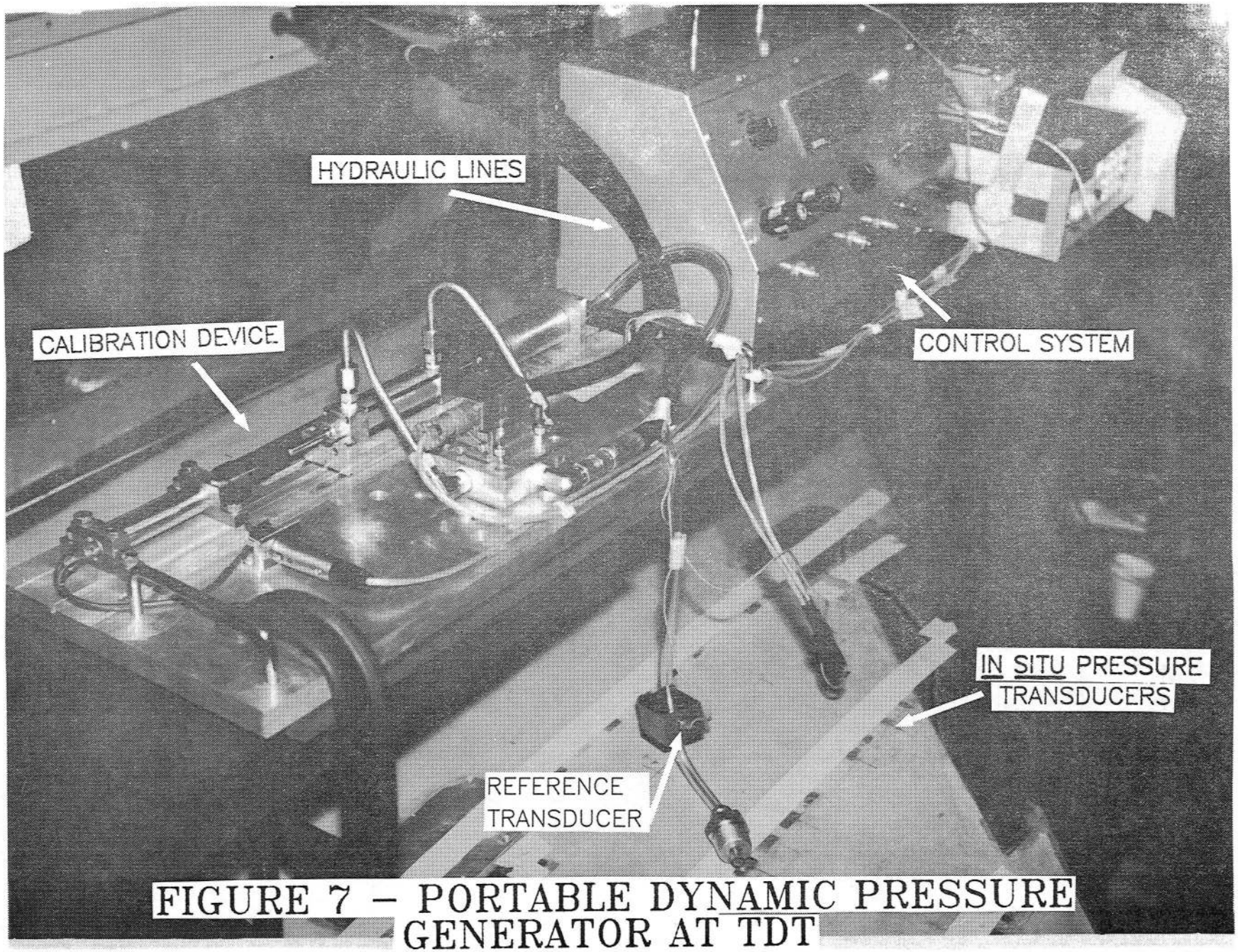


FIGURE 7 – PORTABLE DYNAMIC PRESSURE GENERATOR AT TDT

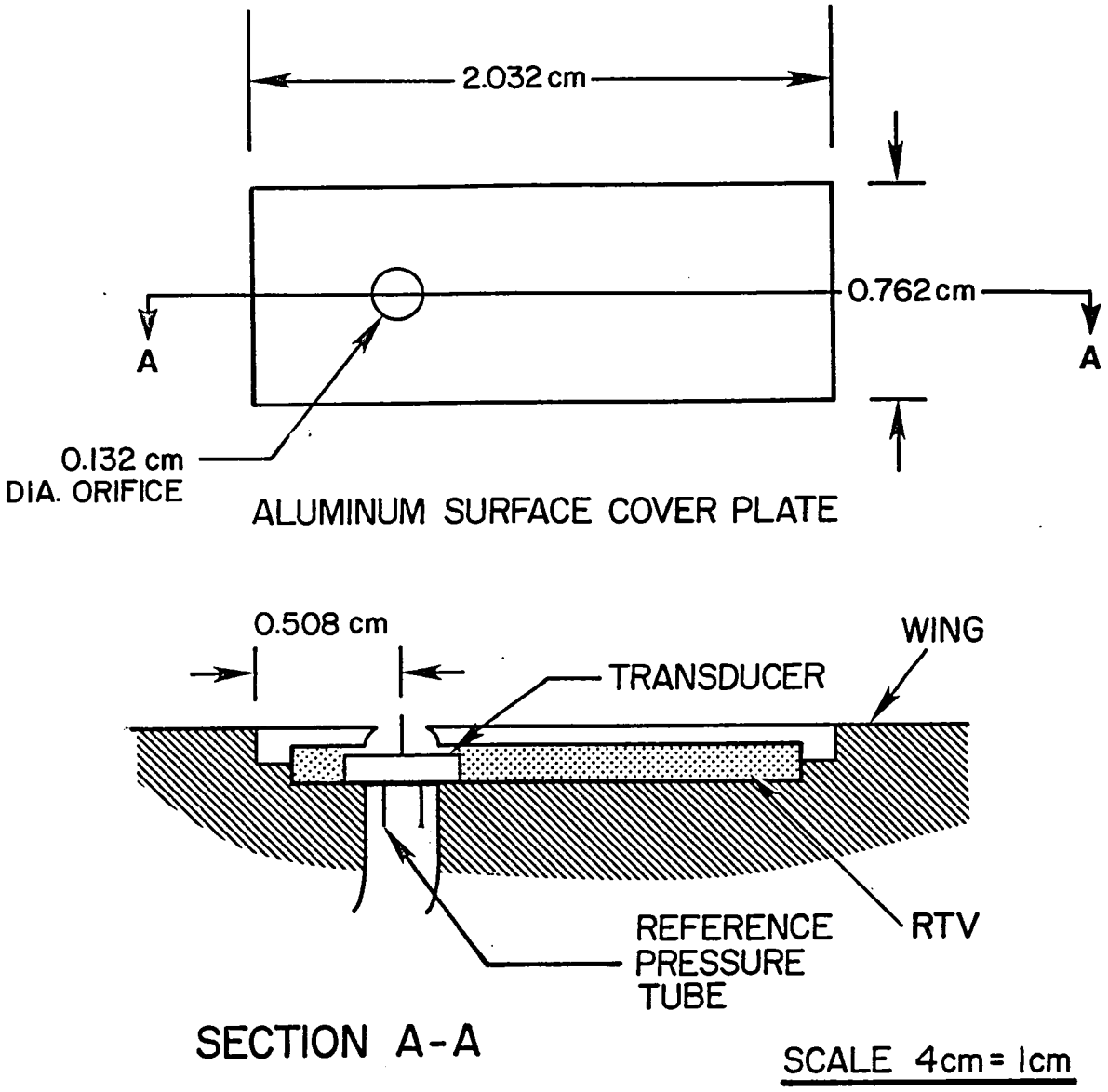


FIGURE 8 – MOUNTING CONFIGURATION OF IN SITU TRANSDUCER IN DELTA WING MODEL

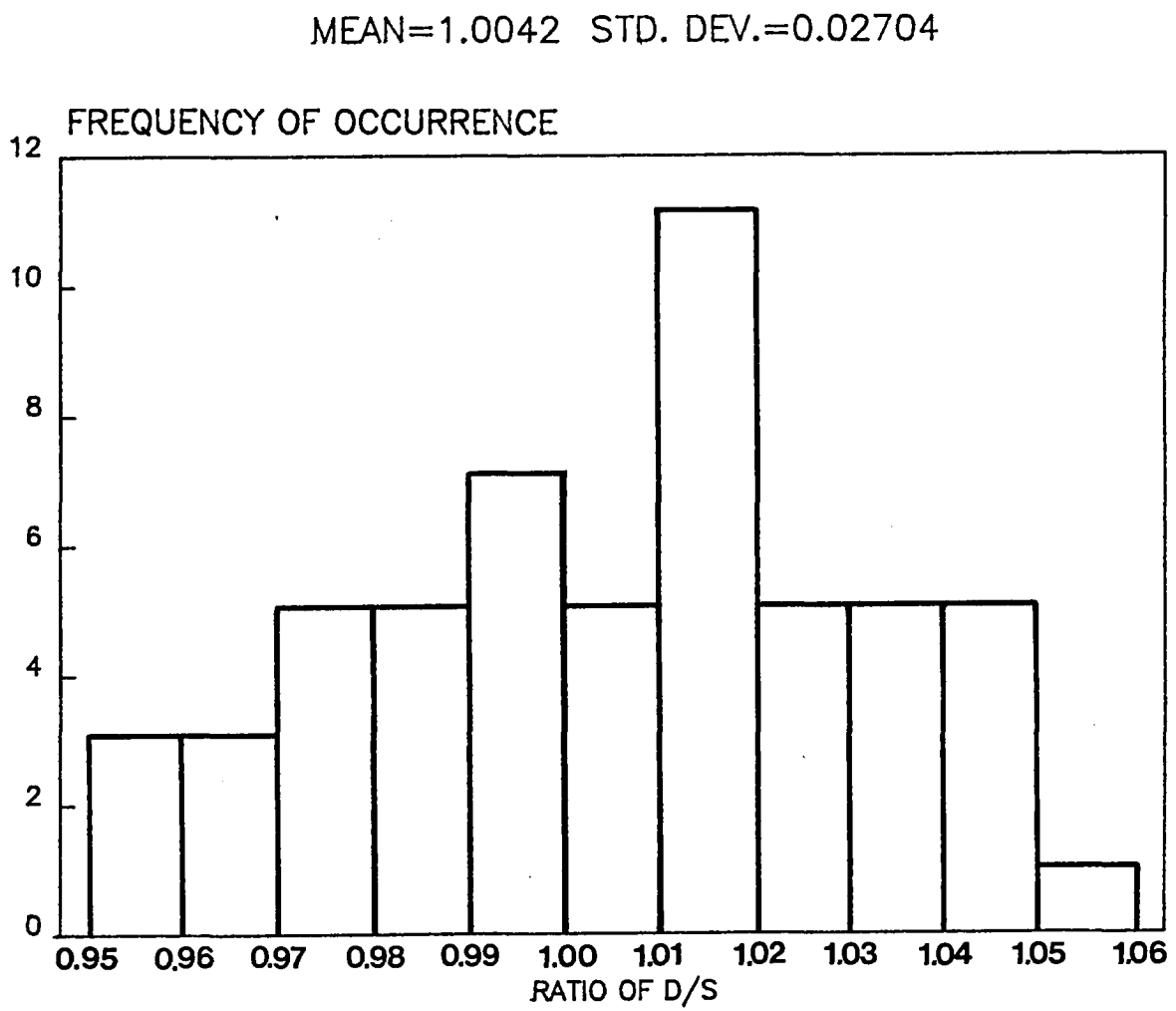


FIGURE 9 – STATIC AND DYNAMIC DATA DISTRIBUTION

| 1. Report No. | 2. Government Accession No. | 3. Recipient's Catalog No. |
|---|---|---|
| NASA TM-85687 | | |

| 4. Title and Subtitle | 5. Report Date |
|---|---|
| Portable Dynamic Pressure Generator for Static and Dynamic Calibration of In Situ Pressure Transducers | August 1983 |
| | 6. Performing Organization Code: 505-33-43-09 |
| 7. Author(s): Pamela A. Bolt, Robert W. Hess, and William T. Davis | 8. Performing Organization Report No. |
| | 10. Work Unit No. |
| 9. Performing Organization Name and Address: Langley Research Center, Hampton, VA 23665 | 11. Contract or Grant No. |
| | 13. Type of Report and Period Covered: Technical Memorandum |
| 12. Sponsoring Agency Name and Address: National Aeronautics and Space Administration, Washington, DC 20546 | 14. Army Project No. |

15. Supplementary Notes

16. Abstract

A portable dynamic pressure generator was developed to meet the requirements of determining the dynamic sensitivities of in situ pressure transducers at low frequencies. The device is designed to operate in a frequency range of 0 to 100 Hz, although it was only tested up to 30 Hz, and to generate dynamic pressures up to 13.8 kPa (2 psi). A description of the operating characteristics and instrumentation used for pressure, frequency, and displacement measurements is given. The pressure generator was used to statically and dynamically calibrate transducers. Test results demonstrated that a difference can exist between the static and dynamic sensitivity of a transducer, confirming the need for dynamic calibrations of in situ pressure transducers.

| 17. Key Words (Suggested by Author(s)) | 18. Distribution Statement |
|---|---|
| Dynamic Pressure<br>Calibrator<br>Transducer Calibration | Unclassified - Unlimited<br>Subject Category 35 |

| 19. Security Classif. (of this report) | 20. Security Classif. (of this page) | 21. No. of Pages | 22. Price* |
|---|---|---|---|
| Unclassified | Unclassified | 14 | A02 |

*For sale by the National Technical Information Service, Springfield, Virginia 22161