United States Patent [19]

Burton et al.

[11] **Patent Number: 4,821,509**

[45] **Date of Patent: Apr. 18, 1989**

[54] **PULSED ELECTROTHERMAL THRUSTER**

[75] Inventors: **Rodney L. Burton**, Fairfax Station, Va.; **Yeshayahu S. A. Goldstein**, Gaithersburg; **Derek A. Tidman**, Silver Spring, both of Md.; **Niels K. Winsor**, Alexandria, Va.

[73] Assignee: **GT-Devices**, Alexandria, Va.

[21] Appl. No.: **133,154**

[22] Filed: **Dec. 7, 1987**

Related U.S. Application Data

[62] Division of Ser. No. 743,150, Jun. 10, 1985.

[51] **Int. Cl.**[4] **F03H 1/00**

[52] **U.S. Cl.** **60/203.1**; 60/204

[58] **Field of Search** ..... 60/202, 203.1, 265, 60/204; 313/231.41, 231.31, 362.1; 219/121 PN, 121 PQ, 121 PR, 121 PU

[56] **References Cited**

U.S. PATENT DOCUMENTS

3,020,431	2/1962	Martina	60/202
3,221,212	11/1965	Gorowitz et al.	60/202
3,233,404	2/1966	Huber et al.	60/202
3,239,130	3/1966	Naundorf, Jr.	60/202
3,353,061	11/1967	Davis	60/202
3,360,682	12/1967	Moore	60/202
3,545,208	12/1970	Stark et al.	60/202
3,603,089	9/1971	Esker	60/203.1
4,577,461	3/1986	Cann	60/203.1

OTHER PUBLICATIONS

Barrere et al., *Rocket Propulsion,* Elsevier Pub., Co., 3/1960, p. 462.

Primary Examiner—Donald E. Stout

Attorney, Agent, or Firm—Lowe, Price, Leblanc, Becker & Shur

[57] **ABSTRACT**

A plasma electrothermal thruster includes a capillary passage in which a plasma discharge is formed and directed out of an open end of the passage into a supersonic nozzle. Liquid supplied to the capillary passage becomes partially atomized to cool a confining surface of the passage. The plasma discharge is formed as the atomized liquid flows out of the open end into a supersonic equilibrium nozzle. The discharge can have a duration greater than the two way travel time of acoustic energy in the capillary to cause the plasma to flow continuously through the nozzle during the time of the discharge pulse.

9 Claims, 5 Drawing Sheets

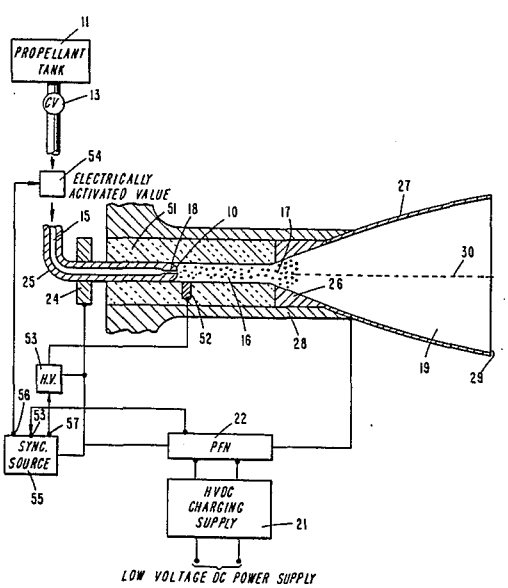

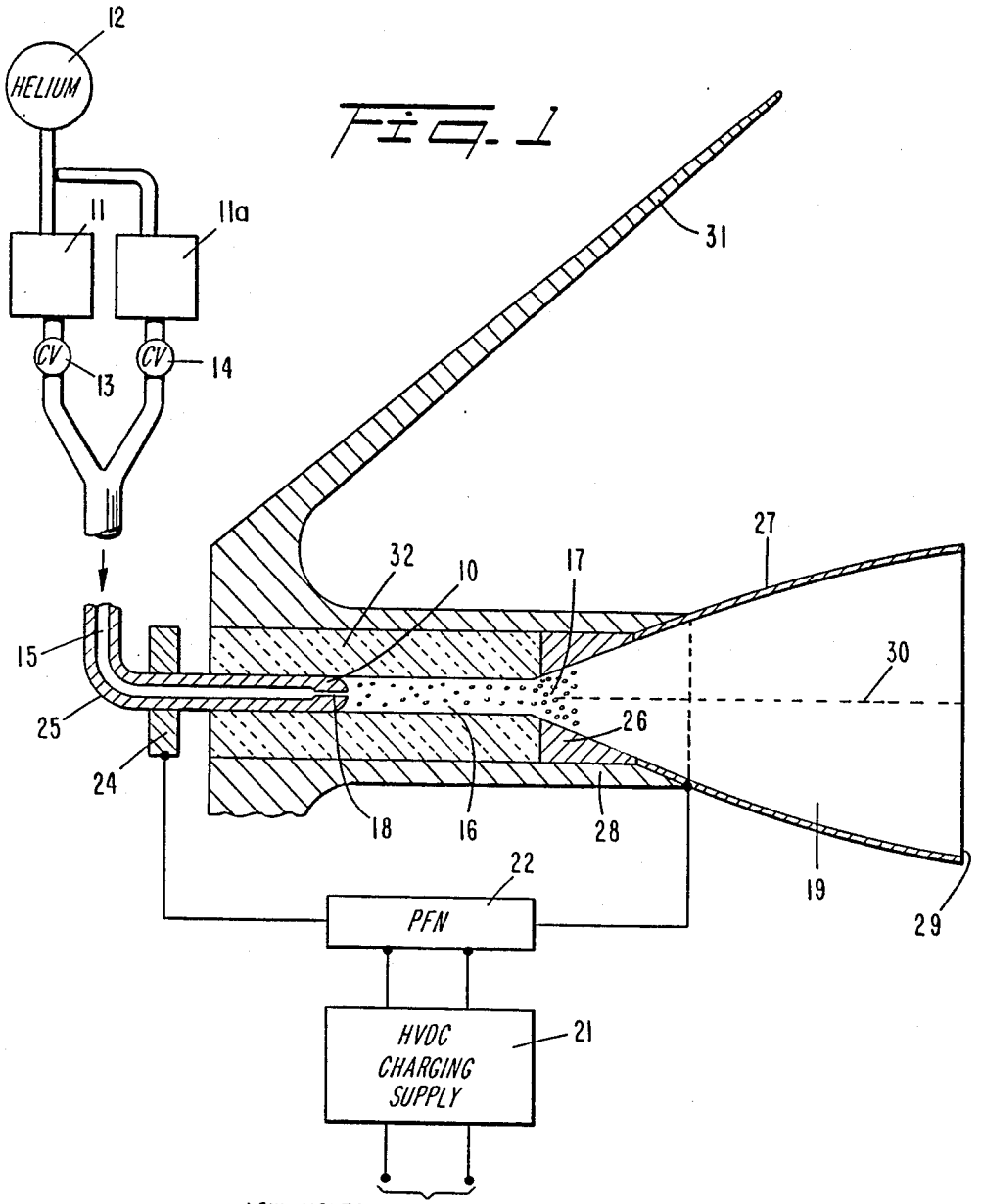
12
HELIUM
11
11a
CV
13
CV
14
31
27
32
10
17
15
30
25
26
24
18
16
28
19
29
22
PFN
HVDC
CHARGING
SUPPLY
21
LOW VOLTAGE DC POWER SUPPLY

FIG. 1

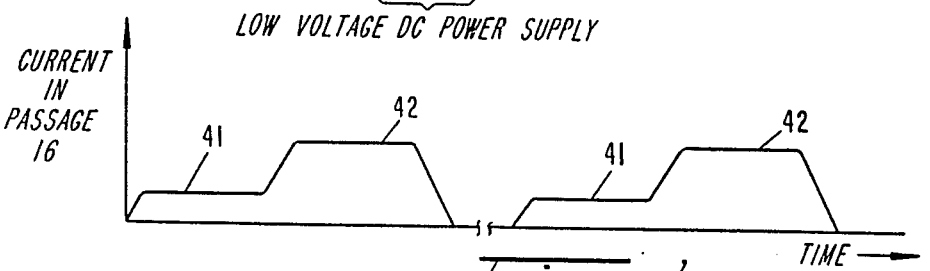
CURRENT
IN
PASSAGE
16
41
42
41
42
TIME

FIG. 1a

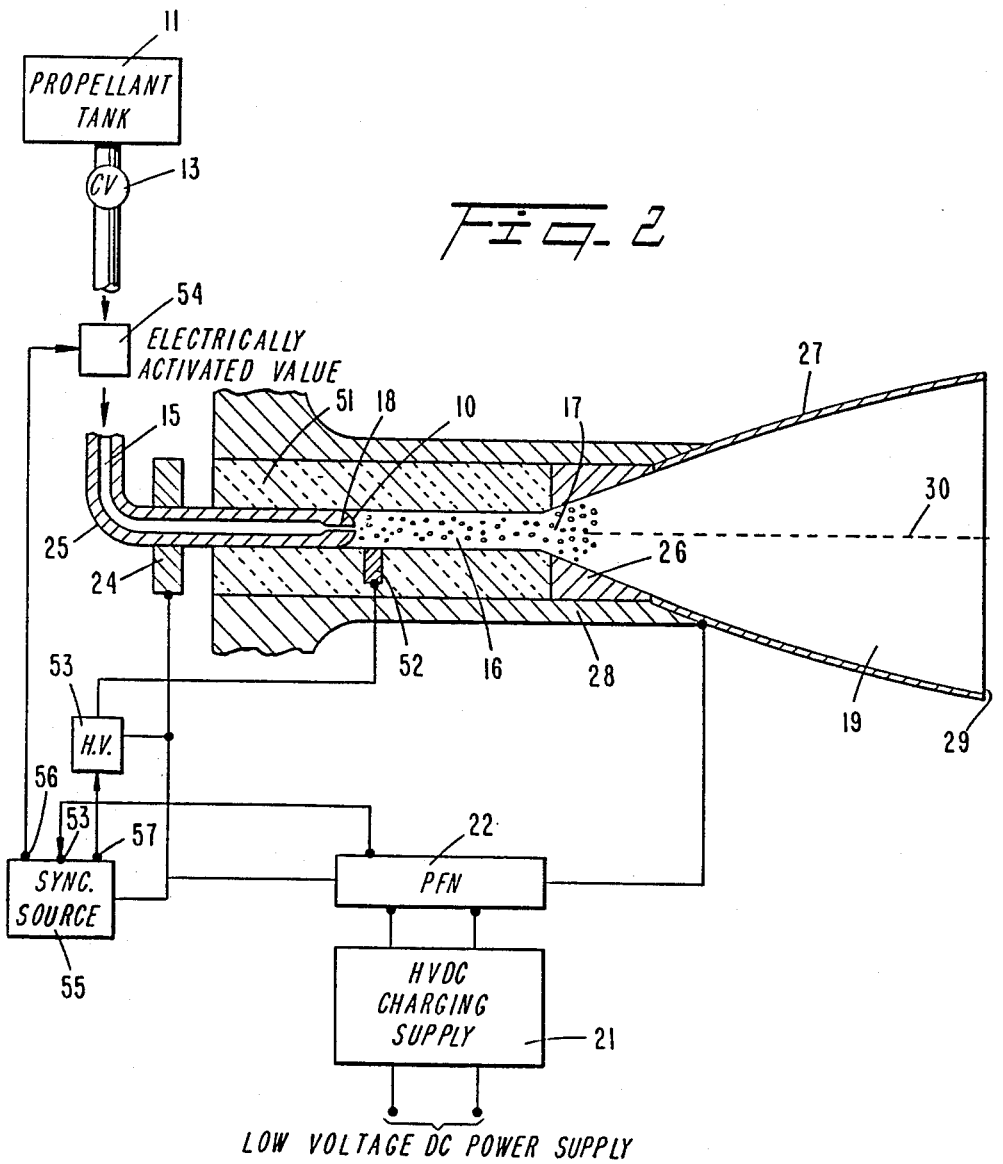
11
PROPELLANT TANK
13
CV
54
ELECTRICALLY ACTIVATED VALUE
15
51
18
10
17
27
30
25
24
26
52
16
28
19
29
53
H.V.
56
53
57
22
SYNC. SOURCE
PFN
55
HVDC CHARGING SUPPLY
21
LOW VOLTAGE DC POWER SUPPLY

FIG. 2

Fig. 3

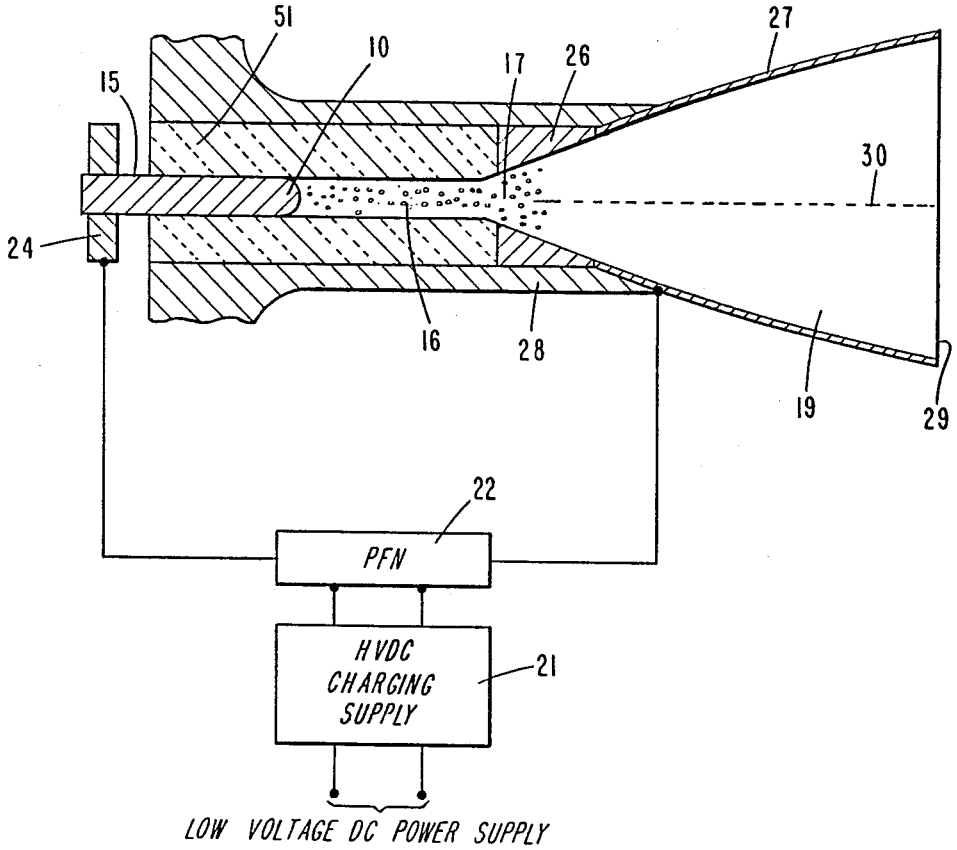
51
10
17
26
27
15
30
24
16
28
19
29
22
PFN
HVDC
CHARGING
SUPPLY
21
LOW VOLTAGE DC POWER SUPPLY

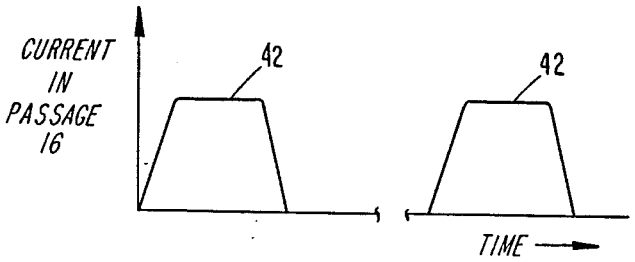
CURRENT
IN
PASSAGE
16
42
42
TIME

Fig. 3a

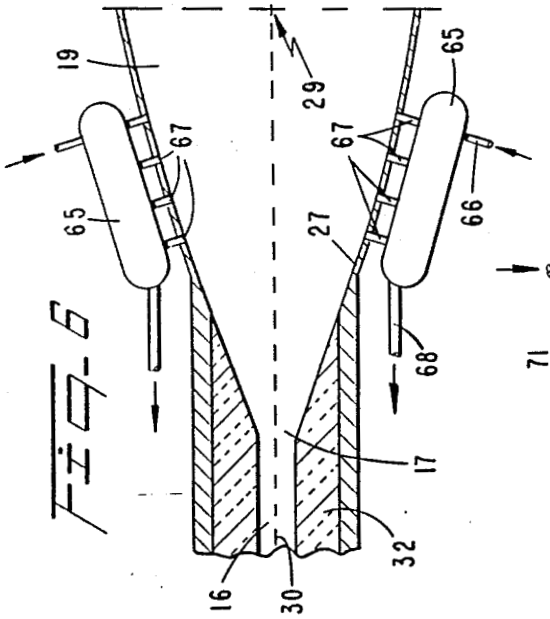

FIG. 6

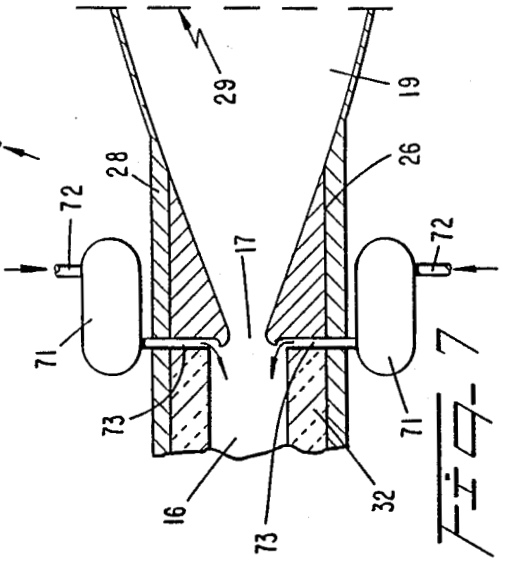

FIG. 7

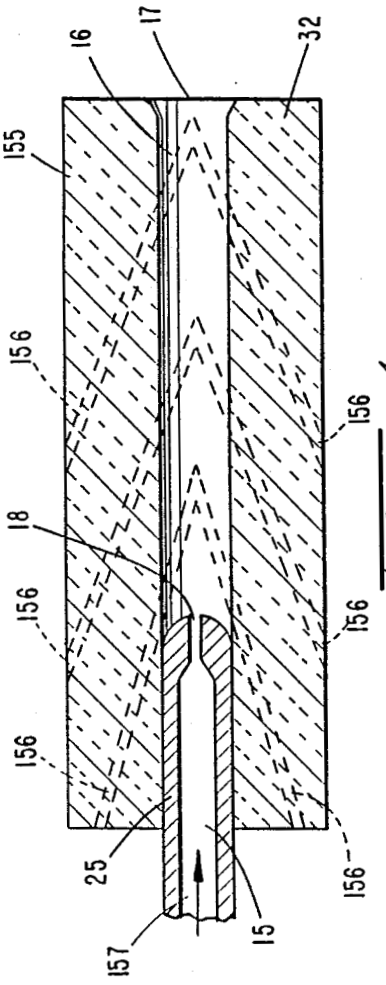

FIG. 4

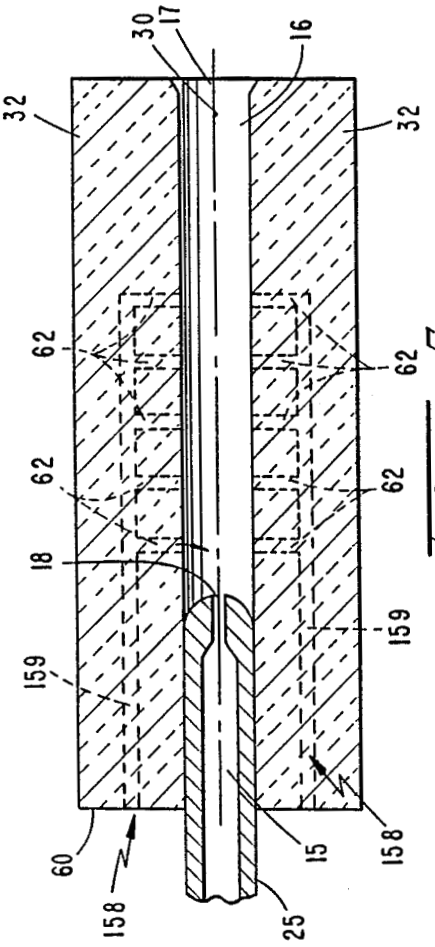

FIG. 5

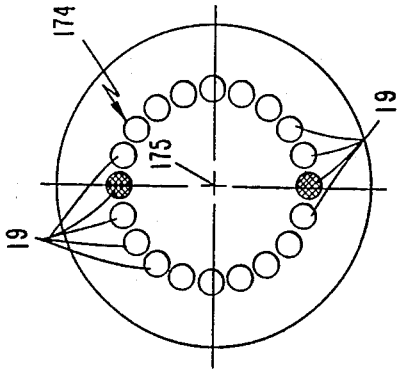
174
19
175
19

FIG. 9

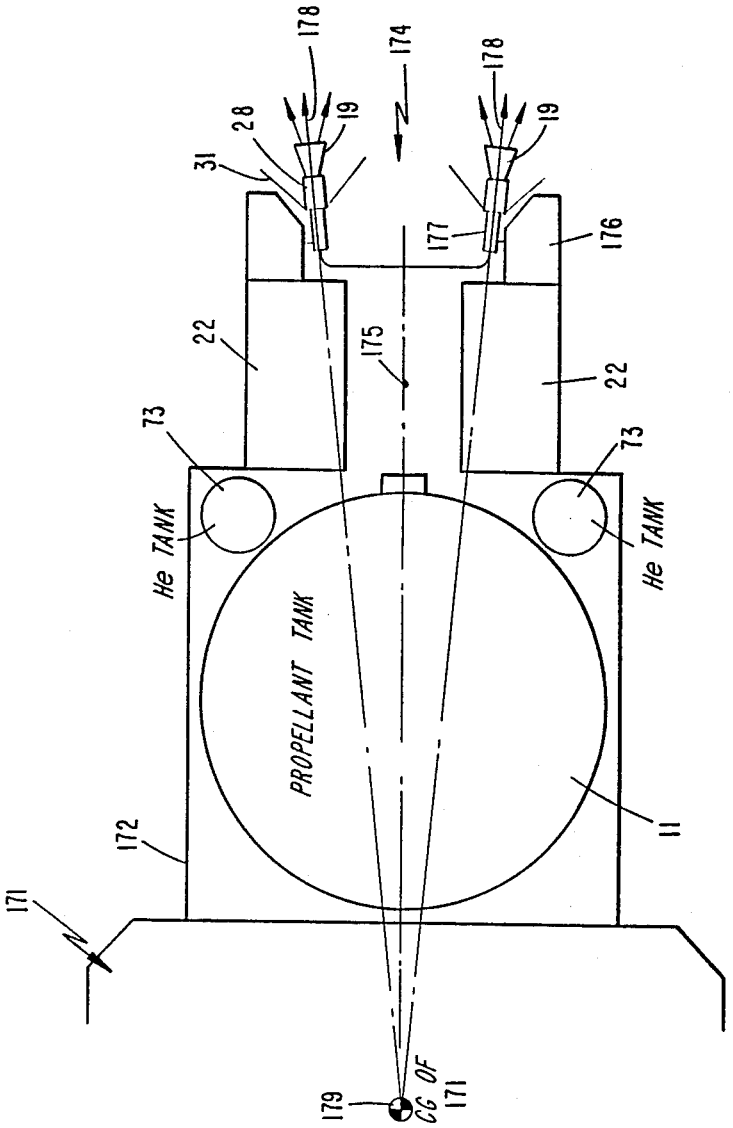
178
174
178
28
19
19
31
177
176
22
175
22
73
73
He TANK
He TANK
PROPELLANT TANK
172
11
171
179
CG OF
171

FIG. 8

PULSED ELECTROTHERMAL THRUSTER

The invention was made with Government support under contract NAS3-23779 awarded by NASA. The Government has certain rights in this invention.

This is a division of application Ser. No. 743,150, filed June 10, 1985.

TECHNICAL FIELD

The present invention relates generally to plasma thrusters and more particularly to a plasma electrothermal thruster including a capillary passage from which a high velocity, high pressure plasma is emitted to propel a mass.

BACKGROUND ART

The use of directed plasmas as a thruster for accelerating a mass on which the plasma source is located has been previously suggested. In Mastrup, U.S. Pat. No. 3,447,322, is disclosed a pulsed ablating thruster apparatus wherein an electric discharge is established in a passageway having one end terminated in a nozzle. The passageway is a bore of an ablating thruster body formed of material such as Plexiglass, nylon and Teflon. In response to a discharge voltage being established between opposite ends of the passage, material is ablated from a confining wall of the passage. The ablated material flows out of the nozzle to provide an accelerating force for the mass on which the thruster is located. Mastrup indicates that the pressure in the passage is to be maintained below 200 atmospheres.

There are numerous problems associated with the thruster disclosed in the Mastrup patent. In particular, ablating the types of materials specifically mentioned in the patent results in a relatively low thrust efficiency of about 20%. This is because of the low pressure of less than 200 atmospheres, which causes the gaseous materials which are formed by the ablation process in response to the discharge voltage to be emitted in a highly ionized and dissociated state. In addition, the confining surface, i.e., wall, of the ablated passage becomes excessively hot if attempts are made to activate the thruster repetitively to generate high thrust, i.e., the product of mass flow rate and velocity. Also, the maximum pressure of 200 atmospheres is insufficient to obtain high thrust in a small, compact device.

A further electric thruster, disclosed in LaRocca, U.S. Pat. No. 3,575,003, includes a wax-like working substance for electrically powering thrust engines by prolonged heating in a vacuum of liquid or soft grease made of fluorocarbon polymers. The resulting material flows under surface tension through tapered passages, moving slowly in a wax-like condition. When heated, the substance moves more rapidly and becomes more fluid. The substance ablates in response to the electric energy and flows out of a central cylindrical or conical aperture to provide propulsive forces to a mass on which the thruster is located. The thrust and efficiency which can be achieved with the structure of the LaRocca device are insufficient for many purposes to achieve any substantial payload velocity.

In the copending, commonly assigned applications of Goldstein et al, Ser. No. 471,215, filed Mar. 1, 1983, and Goldstein et al, Ser. No. 657,888, filed Oct. 5, 1984, are disclosed plasma propulsive systems wherein a projectile is accelerated in response to a plasma discharge established in a capillary passage. A discharge voltage is

established between opposite ends of the passage to cause a plasma to be directed out of one end of the passage. The plasma acts on a projectile, to accelerate the projectile in the direction of plasma flow. In the invention of Ser. No. 471,215, the plasma is directed into a barrel through which the projectile is accelerated by a number of capillaries that are offset with respect to the barrel. In the invention of Ser. No. 657,888, the capillary passage and barrel are aligned. To reduce heating of the barrel, a fluent material, such as water, is located immediately downstream of the capillary passage. The fluent material mixes with the plasma ejected from the capillary passage to reduce the plasma temperature and prevent substantial ablation of the barrel.

The apparatus and method disclosed in the inventions of Ser. Nos. 471,215 and 657,888 are particularly advantageous because of the high plasma momentmm obtained each time a plasma jet is derived from the capillary passage. The high momentum occurs because of the very efficient transfer of energy from an electric power supply to the low molecular weight material used to form the plasma.

In one preferred embodiment in the inventions of Ser. Nos. 471,215 and 657,888, the plasma is formed by ablating hydrogen and carbon atoms from a wall of a polyethylene sleeve having an interior bore that forms the capillary passage. The low atomic weight of the carbon and hydrogen, as well as the electrical characteristics of the capillary passage and the flow characteristics of the passage, provides a highly efficient transfer of electrical energy into plasma kinetic energy.

We have found through experimentation that with appropriate modification structures of the type disclosed in the inventions of Ser. Nos. 471,215 and 657,888 can provide highly efficient thrusters capable of producing substantial thrust impulse. Modification of the structures disclosed in the Goldstein et al inventions for the thruster application is necessary because the capillary passages would become excessively hot if they were activated with the relatively high frequency required to provide the necessary thrust. In addition, there are other aspects of thruster operation, associated with efficient transfer of electric energy to plasma kinetic energy, which have no analogous counterparts in the use of plasmas to propel projectiles.

It is, accordingly, an object of the present invention to provide a new and improved plasma thruster.

Another object of the invention is to provide a new and improved highly efficient electrothermal thruster employing a capillary passage in which a plasma discharge is established.

Still another object of the invention is to provide an electrothermal thruster employing a capillary in which a plasma discharge is established and wherein the plasma discharge provides a relatively high thrust by virtue of relatively high repetition rate plasma discharges.

Still another object of the invention is to provide a new and improved plasma thruster employing a capillary passage in which plasmas are repeatedly developed at a high repetition rate and wherein a confining surface of the capillary passage is cooled.

Still another object of the invention is to provide a thruster employing a capillary passage in which a plasma discharge is repeatedly established at a high repetition rate and wherein a confining surface of the passage is cooled by a substance which adds to the momentum provided by the discharge.

A further object of the invention is to provide an electrothermal thruster employing a capillary in which a plasma discharge is established and wherein the plasma discharge provides a relatively high momentum by virtue of relatively high repetition rate plasma discharges that are converted into a quasi-continuous stream of directed mass from one end of the capillary.

DISCLOSURE OF INVENTION

In accordance with one aspect of the present invention, the thruster mounted on a mass to be propelled includes means for forming a capillary passage having a plasma confining surface. A plasma discharge is formed in the capillary passage, which is initially in either a vacuum or non-vacuum condition. The plasma discharges are either non-ablative or ablative; i.e., for an ablative discharge, material is ablated from the confining surface of the capillary passage into the capillary passage; for a non-ablative discharge, the plasma is derived from a source external to the capillary passage. The apparatus is arranged so the discharge is directed out of only one end of the capillary passage, that is open.

A supersonic equilibrium flow nozzle downstream of the open end of the passage converts high pressure plasma (typically about 1000 atmospheres) in the capillary passage into high velocity plasma having high momentum. The nozzle has a high outlet to inlet area ratio (about 100) and a Reynolds number in excess of 10, and typically about 10^7. Without an equilibrium flow nozzle having the stated characteristics, the plasma exhaust flowing out of the open end of the capillary would be highly ionized, resulting in so-called frozen flow losses in the nozzle. The high pressure allows the ionization energy to be recovered as a directed high velocity plasma flow having a large momentum by virtue of three-body recombination collisions in the nozzle. Thus, the plasma flowing into the supersonic flow nozzle is converted by the nozzle into directed kinetic energy and relatively low ionization, dissociation and thermal energies.

Thrusters of the present invention have a very high efficiency in transferring electric energy to plasma enthalpy and in transferring plasma enthalpy to streaming velocity in the nozzle. The electric energy is transferred with high efficiency because the geometry of the capillary passage (the large length to diameter ratio of approximately 10:1) provides a relatively large ohmic resistance to an electrical pulse forming network or other source of electrical energy for supplying the plasma discharge energy; the material in the capillary passage has a resistance considerably greater than any other resistive component connected between output terminals of the pulse forming network or other electrical source. The plasma enthalpy is transferred with high efficiency to streaming velocity because the nozzle has a high area ratio and operates at high pressure and high Reynolds number to achieve nearly equilibrium, adiabatic flow. Versions of the device can operate over a very wide range of power levels, from a few watts for satellite station-keeping, or at power levels of thousands of megawatts for the launch of heavy payloads.

We have also found that a desirable quasi-steady flow of plasma from the capillary is attained by arranging the length of a discharge pulse for the plasma to be longer (preferably about ten times) than the two-way longitudinal travel time of acoustic energy in the capillary filled with the plasma. If the pulse length equals or is less than the two way longitudinal travel time, plasma is ejected in an unsteady manner from the capillary open end, reducing the velocity of fluid flowing from the capillary and inducing frozen flow losses. (A quasi-steady plasma flow has a steady flow while the pulse producing the plasma is derived; between pulse intervals the plasma flow out of the capillary drops substantially to zero.)

Liquid supplied to the capillary passage cools the passage confining surface, to prevent substantial damage thereto. The liquid is formed of a material having low atomic weight components, such as liquid hydrogen, hydrazine, or water; the liquid is divided into its atomic constituents by heat from the plasma discharge, to provide materials that flow out of the open end of the capillary passage. For the ablative structure, the atoms constituting the liquid are added to the gases ablated from the capillary passage confining surface. For the non-ablative situation, the atoms from the liquid constitute the sole source of plasma that is ejected from the open end of the passage. The injected liquid propellant is partially atomized into droplets in the capillary to assist in establishing the plasma more readily and provide greater heat transfer. Droplets of the cooling liquid are in a cooling heat exchange relation with walls of the capillary by convective heat transfer.

The propelling liquid is supplied either continuously or intermittently, at a predetermined frequency, to the capillary passage. In either case, the discharge in the capillary occurs at a time when the leading edge of the injected and partially atomized fluid is leaving the open end of the passage and entering the supersonic nozzle, immediately downstream of the open passage end. It is preferable to match the mass flow rate of the liquid to the repetition rate and energy of the plasma discharge to achieve optimum operation. If the liquid mass flow rate is too high, all of the liquid mass is not converted to heated plasma, in which case the non-heated liquid may cause the device to run at an excessively low temperature. This would reduce the velocity of gaseous atoms flowing out of the apparatus and thereby decrease the specific momentum of the structure. If the liquid mass flow rate is excessively low relative to the discharge repetition rate and energy, the opposite results are likely to occur; i.e., the capillary passage confining surface becomes excessively hot, causing a high rate of erosion therefrom and considerable erosion of an electrode at the open end of the capillary to which a high voltage is applied to establish the plasma discharge.

The above and still further objects, features and advantages of the present invention will become apparent upon consideration of the following detailed description of several specific embodiments thereof, especially when taken in conjunction with the accompanying drawings.

BRIEF DESCRIPTION OF THE DRAWINGS

FIG. **1** is a schematic view of a single liquid propellant thruster adapted to be operated under vacuum conditions, in accordance with a first embodiment of the invention;

FIG. **1***a* is a waveform preferably applied by the pulse forming network of FIG. **1** to electrodes longitudinally spaced from each other along the length of a capillary in the FIG. **1** thruster;

FIG. **2** is a schematic diagram of a single liquid propellant thruster adapted to be operated in non-vacuum

conditions in accordance with a second embodiment of the invention;

FIG. 3 is a schematic diagram of a single solid propellant thruster adapted to be operated under vacuum or non-vacuum conditions in accordance with a third embodiment of the invention;

FIG. 3*a* is a waveform preferably applied by the pulse forming network of FIG. 3 to electrodes in the capillary passage of the thruster of FIG. 3;

FIG. 4 is a schematic diagram of a modified version of a ceramic insulator adapted to be used in the thruster of FIG. 1;

FIG. 5 is a schematic diagram of a further modification of a portion of the thruster of FIG. 1;

FIG. 6 is a further modification of the thruster of FIGS. 1 and 2 wherein there is transpiration cooling of a supersonic nozzle downstream of a capillary;

FIG. 7 is a schematic diagram of another modification of the invention wherein water is injected into the capillary immediately upstream of an open end thereof which enters into the nozzle;

FIG. 8 is a side schematic view of an array of plural thrusters of the type illustrated in FIG. 1; and

FIG. 9 is an end view of the thruster array illustrated in FIG. 8.

BEST MODE FOR CARRYING OUT THE INVENTION

Reference is now made to FIG. 1 of the drawing wherein there is schematically illustrated a single thruster in accordance with one aspect of the invention. The thruster of FIG. 1 is particularly adapted to be operated in vacuum conditions, as exist in outer space. In the thruster of FIG. 1, a low atomic weight liquid propellant, such as water or monopropellant hydrazine (N_2H_4) or a mixture of two liquids such as water and hydrazine, or a mixture of two combustible liquids such as liquid hydrogen and liquid oxygen, is stored in tank **11**, and flows via a suitable check valve **13** into conduit **15**. The propellant in tank **11** is pressurized by high pressure helium in tank **12**, in a manner well-known to those of ordinary skill in the art of liquid monopropellant systems.

The liquid propellant in conduit **15** flows via opening **18** in electrode **10** into capillary passage **16**, preferably having a diameter to length ratio of about 1:10. Opening **18** has a relatively small diameter to provide the correct flow velocity for the liquid propellant and to reduce the back flow into passage **15** so that there is relatively low back pressure from capillary passage **16** into tank **11**, whereby the flow of liquid from the tank is not impeded by the pressure in capillary **16**. In capillary passage **16**, the liquid propellant is partially or fully atomized and partially evaporated, so that there is a two-phase flow of liquid and gas through the capillary. The liquid propellant is dissociated into the low atomic weight elemental constituents thereof by an electric discharge that forms a plasma. In certain circumstances in which two liquids are used which do not mix in tank **11**, a second tank **11***a* with valve **14** pressurized by helium in tank **12** is used, in which case the two liquids are discharged through valves **13** and **14** and mixed in conduit **15**. The plasma has a very high pressure, typically about 1000 atmospheres, in capillary **16** and flows out of open end **17** of capillary **16**, opposite from entry end opening **18** in electrode **10**.

The liquid, gas and plasma flow from open end **17** of capillary passage **16** into supersonic equilibrium flow nozzle **19**, shaped as a cone or bell having a curved confining surface, to provide high efficiency in converting the very high pressure plasma into a directed supersonic flow having high momentum. Capillary passage **16** and nozzle **19** are aligned so they have a common longitudinal axis **30**.

Ejection of low temperature plasma in thermodynamic equilibrium from nozzle **19** must occur to avoid "frozen flow" in the nozzle. Such a result is achieved by proper design of the geometry of supersonic nozzle **19** between throat region **17** and end region **29**, and of the high density of the plasma. The areas of throat region **17** and exit area **29** are appropriately selected so the area ratio of region **29** to region **17** is at least 100. If the ratio is less than 100, the ejected plasma flows out of nozzle exit area **29** at high enthalpy, and an appreciable amount of the ejected plasma flows sideways out of nozzle exit area **29**, so that the efficiency is decreased materially. The shape of the interior wall of flared tube **27** is displaced by 10° to 25° from the nozzle axis to achieve maximum efficiency. If the nozzle wall is displaced by more than 25° at region **29** the plasma flowing out of region **29** spreads excessively and is not adequately directed. If the angle of tube **27** is less than about 10°, there is excess length of nozzle **29** and consequently excess friction between the plasma and wall. The voltage at electrode **26** is applied as close as possible to nozzle throat **17** to provide maximum expansion of the plasma in nozzle **19**. Electrode **26** is as close as possible to opening **17** so that, after electrical heating of the plasma has been completed between electrodes **26** and **10**, a large area ratio exists between region **29** and electrode **26** to convert the thermal energy of the plasma into a directed momentum.

The plasma discharge is established by high voltage DC power supply **21**, pulse forming network or other source **22** and electrodes **10** and **26** connected to the pulse forming network. One terminal of pulse forming network **22** is connected to an electrode assembly including metal ring **24** having an inner diameter electrically and mechanically connected to the exterior of metal tube **25** in which passage **15** is formed. Metal tube **25** extends to electrode **10** containing opening **18** through which the liquid propellant flows into capillary **16**. The other terminal of pulse forming network **22** is connected to metal flared tube **27** that forms the end of nozzle **19**, i.e., the portion of the nozzle extending between throat region **17** and the nozzle end **29**. Flared tube **27** is connected to electrode **26** and to metal compression jacket **28**, preferably formed of high temperature stainless steel which contains and compresses insulator **32**. The interior of flared tube **27** and of jacket **28** between opening **17** and exit region **29** forms a continuous bell-shaped or conical surface of revolution about longitudinal axis **30** of passage **16**. The portion of passage **15** that exits into opening **18** has a longitudinal axis coincident with axis **30**. Opening **18** may also be formed of a number of small holes arranged symmetrically around axis **30**.

Jacket **28** surrounds and squeezes high temperature ceramic dielectric tube **32** having a central longitudinal bore into which tube **25** is fitted and which defines passage **16**. Jacket **28** squeezes tube **32** so the tube is always in compression under all operating conditions of the thruster, to prevent cracking of tube **32**. The central bore at the end of tube **32**, where opening **17** is located, is slightly flared outwardly to match the continuous shape of the nozzle formed by flared tube segment **27**

and electrode **26**. The material chosen for ceramic tube **32** must have a relatively high thermal conductivity to provide heat conduction from capillary passage **16** to compression jacket **28**, to enable passage **16** to remain relatively cool during operation. In other words, tube **32** must be capable of transferring the heat supplied to the walls of passage **16** by the plasma in the passage to jacket **28**, for removal to the outer space environment in which the thruster is operating.

The heat transferred by high temperature ceramic insulator **32** to compression jacket **28** is transferred to the environment surrounding the thruster by providing the portion of the jacket remote from nozzle **19** with an elongated metal fin **31** that extends radially from the remainder of the thruster, in a direction toward nozzle **19**. Metal fin **31** is an integral portion of jacket **28** to transfer heat conducted to it through ceramic insulator tube **32** to space. Fin **31** is oriented so as to radiate a minimum amount of energy back to the spacecraft to which the thruster is attached.

Tube **32** is formed of any well-known high temperature ceramic, such as various forms of silicon nitride, alumina, and silicon carbide. A high temperature ceramic insulator is preferably employed for tube **32** for non-ablative uses of the thruster. For some applications, insulator **32** is preferably an ablative material, as described infra in connection with FIG. **3**.

In operation, liquid from tank **11** or tanks **11** and **11***a* continuously flows into passage **15** and the high voltage DC charging supply **21** is activated to charge pulse forming network **22** at a predetermined frequency, such as 200 pulses per second. The charging voltage of 2000 V to 8000 V supplied by network **22** causes a discharge to be established in capillary passage **16** between electrodes **10** and **26** at a time when partially atomized fluid is entering supersonic nozzle **19** through opening **17**. The velocity and mass flow rate of liquid flowing through passage **16** and the repetition rate and energy of the plasma discharge between electrodes **10** and **26** are matched to achieve optimum operation. If the liquid velocity and mass flow rate were excessively low with regard to the rate at which pulses are applied between electrodes **10** and **26** and with regard to the energy of the pulses, the liquid mass would be heated to excessively high temperatures in passage **16**, resulting in ablation of electrodes **10** and **26** and of insulator **32**. Alternatively, if the liquid mass flow rate and velocity were excessively high relative to the rate and energy of pulses which are applied between electrodes **10** and **26** the vapor flowing out of opening **17** into nozzle **19** would be excessively cool and have a relatively low velocity, which decreases the efficiency of the thruster.

In operation, propellant from tank **11** or tanks **11** and **11***a* flows continuously through needle check valve **13** or valves **13** and **14** into passage **15**. Typically opening **18** at the end of passage **15** has an inner diameter of approximately 0.3 millimeters and is 1 centimeter long. Propellant flowing out of opening **18** partially atomizes into drops. The propellant flows through opening **18** into capillary passage **16**, typically having a length of about 5 centimeters and a diameter of about half a centimeter. The water in passage **16** cools the passage, as well as a portion of the walls of nozzle **19**.

In the preferred embodiment, pulse forming network **22**, which can be of conventional design, initially applies a relatively low energy pulse between electrodes **10** and **26**, as indicated by waveform portion **41**, FIG. **1***a*. The current flowing in passage **16** during waveform portion **41** causes all of the propellant in the capillary passage to be evaporated, producing a quasi-uniform temperature of the propellant in capillary passage **16**. Current flows uniformly through capillary passage **16** between electrodes **10** and **26**. The duration of waveform portion **41** is kept short to minimize propellant flow out of the capillary while portion **41** is derived.

When waveform portion **41** has been completed, the current supplied by pulse forming network **22** between electrodes **10** and **26** increases to approximately 10–30 kiloamperes, as indicated by waveform portion **42** which is continuous with and follows immediately after waveform portion **41**. The increased current in capillary passage **16** between electrodes **10** and **26** causes the propellant in the capillary to be converted into an ionized, high pressure plasma. The plasma flows through opening **17** into supersonic nozzle **19**. Nozzle **19** converts the high pressure of the plasma flowing in capillary **16** through opening **17** into a high velocity, high momentum flow having a directed velocity along axis **30** away from nozzle end **29**.

While the plasma is established in passage **16** during wave portions **41** and **42**, the resistance between electrodes **10** and **26** drops rapidly from virtually an open circuit condition along the length of dielectric tube **32** to about 100 milliohms, roughly matching the characteristic impedance of pulse forming network **22** to provide maximum power transfer between the pulse forming network and the discharge in capillary passage **16**. Propellant droplets in passage **16** are evaporated by radiation from the plasma and by convective heat transfer from the plasma, a condition which establishes the energy requirement for pulse waveform portion **41**. Waveform portion **42** typically has a duration of a few tens of microseconds, while waveform portion **41** typically has a length anywhere between one-third that of waveform portion **42** and three times the length of waveform portion **42**. The length of waveform portion **41** is determined by the flow velocity of the liquid in passage **16**, the time required to convert virtually all of the water droplets in passage **16** into a vapor state, and the length of passage **16**. The length of waveform portion **42**, i.e., the duration of the high current portion of the plasma discharge, is greater than the two way travel time of acoustic energy in the plasma in capillary passage **16** between ends **17** and **18** of the passage to provide for the quasi-steady flow of the plasma from end **29** of nozzle **19**.

It is not necessary, in a vacuum atmosphere, to provide a trigger circuit to initiate the discharge in capillary passage **16**. Instead, Paschen breakdown occurs through the vapor surrounding the injected liquid propellant in passage **16** at the initiation of pulse **41** to cause the propellant to be converted into a plasma. The propellant must therefore possess a sufficiently high vapor pressure to permit Paschen breakdown in this mode of operation.

In accordance with a second embodiment of the invention, as illustrated in FIG. **2**, the thruster is designed to be operated under non-vacuum conditions. With a non-vacuum system, it is necessary to provide an auxiliary source for establishing the discharge in capillary passage **16**. In the illustrated embodiment, the auxiliary discharge is provided by spark plug **52**, mounted in the wall of passage **16**, immediately downstream of opening **18**. Spark plug **52** is connected to a high voltage source **53** which initiates an electric discharge between an electrode (not shown) in spark plug **52** and electrode **10**.

The electrode of spark plug **52** is exposed to the gases in capillary passage **16** to enable the discharge to be established between the electrode of plug **52** and electrode **10**.

It is also frequently desired for non-vacuum environments, as well as in some outer space situations, to supply liquid to passage **15** on a pulsed, rather than continuous basis. To this end, electrically operated valve **54** is connected between passage **15** and check valve **13** to control the flow of propellant from source **11** into passage **15**.

To control the relative timing of the opening of valve **54**, the initiation of a discharge in capillary passage **16** between electrode **10** and spark plug **52**, and the application of a power pulse from network **22** to the capillary passage between openings **17** and **18**, synchronizing source **55** is provided. Synchronizing source **55** includes two output terminals **56** and **57** respectively connected to valve **54** and high voltage source **53** and one input terminal connected to pulse forming network **22**. Source **55**, when triggered by a signal supplied by network **22** to input terminal **58**, supplies pulses to each of terminals **56** and **57** at the same frequency, but with different phases to provide proper operation of the thruster, in a manner similar to that described supra in connection with FIG. **1**.

When the voltage in network **22** has reached a predetermined level, a trigger pulse is sent to terminal **58** to trigger source **55**. The pulse supplied by source **55** to terminal **56** causes valve **54** to open, causing propellant to be supplied from source **11** to passage **15**. Source **55** also supplies a pulse to terminal **57** at the time propellant droplets flowing from passage **15** into capillary **16** have filled capillary **16**, causing high voltage source **53** to apply a voltage between the electrode of plug **52** and electrode **10**, creating an electrically conducting plasma. The availability of a conducting plasma in passage **16** causes pulse forming network **22** to derive a current having the shape indicated by the waveform of FIG. **1***a*. Alternatively, pulse forming network **22** is designed so the low current portion of the waveform **41** is not included in the pulse supplied between electrodes **10** and **26**, so that only high current pulse portion **42** is generated by pulse forming network **22** in capillary passage **16**. In either case, the water droplets in passage **16** are vaporized and heated to high pressure and temperature when high current portion **42** begins to flow in passage **16** between electrodes **10** and **26**.

In a vacuum environment where Paschen breakdown through the propellant vapor can occur between electrodes **10** and **26**, spark plug **52** and high voltage source **53** can be eliminated, and synchronizing source **55** derives a signal to command opening of valve **54** upon receiving a trigger signal from network **22**.

In accordance with a third embodiment of the invention, as illustrated in FIG. **3**, the thruster is designed to be operated with a solid propellant. In this situation, non-ablative ceramic insulator **32** is replaced with ablative insulator tube **51** made of materials which, when ablated to form a plasma by a discharge in passage **16**, have low atomic weight. In one preferred embodiment, insulator tube **51** is made of polyethylene that is ablated into the low atomic weight gases of hydrogen and carbon. In such an instance, the need for a propellant supply tank and associated check valve is obviated. Ablative tube **51** can also be used in space applications, but has no means of replacing the propellant consumed by the structure as is done with the structure of FIGS. **1** and **2**.

In the embodiment of FIG. **3**, high voltage DC charging supply **21** raises the voltage of network **22** until an electrical breakdown occurs in a thin carbon layer (not shown) on the inner wall of tube **51**, between electrodes **10** and **26**. Initially, prior to the first discharge the carbon layer is provided by graphite particles lying on the inner wall of the capillary passage. In response to each discharge between electrodes **10** and **16**, carbon particles from the polyethylene in tube **51** forms a carbon layer on the inner wall of the tube. The carbon layer provides a relatively low impedance path between electrodes **10** and **16** to enable the discharge to be initiated between the electrodes. Network **22** generates a high current pulse **42** as shown in the waveform of FIG. **3***a*. The low current portion (**41** in FIG. **1**) is not used with ablative wall systems, as illustrated in FIG. **3**.

In response to the high voltage discharge established in capillary **16** during the high current portion of the pulse **42** derived by network **22**, hydrogen and carbon are ablated from the wall of tube **51** that forms passage **16**. The ablated material in passage **16** forms a plasma that is ejected through opening **17** into nozzle **19**. The resulting plasma flows out of nozzle **19** as directed momentum that applies a thrust to a vehicle on which the thruster is located.

If desired, a spark plug **52**, high voltage source **53** and sync source with terminals **57** and **58** as shown in FIG. **2** can be used to provide precise timing, if the trigger signal supplied to terminal **58** is provided by a precision timing clock circuit (not shown).

In the embodiments of FIGS. **1** and **2**, the walls of passage **16** are cooled by injecting water droplets axially of the passage **15** and opening **18**. Other structures can be provided for water to cool the wall of passage **16**, e.g., as illustrated in FIGS. **4** and **5**. In the embodiment of FIG. **4**, the solid ceramic insulator tube **32** of FIG. **1** is replaced with a ceramic insulator tube **155** having passages **156** which are longitudinally and radially directed so they have spaced openings at different longitudinal and radial positions into passage **16** between openings **17** and **18**. The ends of passages **156** along the exterior walls and face of tube **32** are connected to a pressurized propellant supply (not shown in FIG. **4**) which supplies propellant droplets to passages **156**; the droplets flow out of passages **156** to form a liquid film on passage **16**. The liquid film on passage **16** is vaporized in the manner discussed supra with regard to vaporization of propellant from source **11** in passage **16**.

As indicated by arrow **157**, tube **25** can be inserted by differing amounts into passage **16**. Thereby, as the tip of tube **25** adjacent opening **18** erodes in response to the discharge between opening **17** and **18**, tube **25** is inserted into passage **16** by differing amounts, to maintain the separation between openings **17** and **18** constant.

In another embodiment, illustrated in FIG. **5**, the propellant film on the wall of passage **16** is provided by water flowing through a series of passages **158**. Each of passages **158** includes a longitudinal portion **159** that terminates in end face **60** of tube **32** opposite from the end face containing opening **17**. Propellant is supplied under pressure from a suitable source (not shown in FIG. **5**) to passage portions **159**. Each of passages **158** includes plural radially extending portions **62** leading from longitudinal passage portions **159** into the wall of capillary passage **16**, at spaced longitudinal positions

along the capillary passage. Propellant flowing from passage portions **159** into passage portions **62** forms a film on the inner wall of capillary passage **16**. Alternatively, propellant droplets from passage portions **62** flow radially in capillary passage **16** toward axis **30** to encircle the propellant supplied to passage **16** via passage **15** and opening **18**. In either event, the propellant in passage **16** encircles the propellant flowing through opening **18** into capillary passage **16** to cool ceramic insulator tube **32**.

Cooling can also be provided to nozzle **19** downstream of opening **17**, between opening **17** and end region **29**, by a mechanism similar to transpiration cooling, as illustrated in FIG. **6**. In the embodiment of FIG. **6**, the pressurized liquid propellant supplied to opening **18** (FIG. **1**) serves as a cooling medium for flared tube **27** downstream of opening **17**. The liquid propellant from tank **12**, prior to flowing through opening **18**, is heated by contact with flared tube **27**, which is heated by the plasma ejected from opening **17**. The heat exchange between the plasma in nozzle **19** and the propellant raises the temperature of the propellant entering passage **15** and opening **18**. This provides higher efficiency because the liquid propellant is regeneratively heated by the discharge of the plasma which it forms.

In the nozzle cooling structure illustrated in FIG. **6**, plural manifolds **65** are located adjacent flared tube **27** between opening **17** and end region **29**. While only two such manifolds **65** are illustrated in FIG. **6**, it is to be understood that more than two equally spaced manifolds are provided at different angular positions relative to axis **30**, when looking through a cross-section of jacket **29** transverse to axis **30**. Manifold **65** is connected to inlet passage **66**, in turn connected to pressurized liquid propellant source **12** (not shown in FIG. **6**). The pressurized liquid propellant flowing from passage **66** into manifold **65** flows radially through passages **67**, between manifold **65** and the wall of tube **27** between opening **17** and end region **29**. The pressurized liquid propellant thus cools the portion of the wall of tube **27** exposed to the hot plasma flowing out of opening **17**, between opening **17** and end region **29**. Because of the heat transfer between the plasma and the pressurized propellant liquid in manifold **65**, the pressurized propellant liquid is heated. The pressurized liquid propellant flows out of manifold **65** into passage **68**, thence to passage **15** in tube **25**. The thus heated pressurized liquid propellant flows from passage **15** through opening **18** and is converted into a plasma by the discharge established between openings **17** and **18** by the high voltage from pulse forming network **22**. High temperature ceramic insulator **32** is cooled in the manner described supra in connection with any of FIGS. **1**, **2**, **4** or **5**.

An alternative structure for cooling the wall portion of nozzle **19** between opening **18** and end region **29** is illustrated in FIG. **7** wherein high pressure propellant is injected into smoothing tank **71** by way of passage **72**. From smoothing tank **71**, the propellant flows through passage **73** into the end of capillary passage **16** in the vicinity of opening **17**, i.e., at the end of passage **16** where nozzle **19** begins. Passage **73** has an opening facing away from opening **17**, toward opening **18**. Propellant flowing from passage **73** has a tendency to flow axially into capillary passage **16** against the direction of plasma flow through passage **16** into nozzle **19**. However the high pressure, about 1000 atmospheres, plasma in capillary **16** sweeps the propellant into nozzle **19** to cool the portion of the nozzle wall between opening **17** and end region **29**. Smoothing tank **71**, as well as passages **72** and **73**, are formed in compression jacket **28** adjacent opening **17**. Passage **73** is formed as a space between the end face of tube **32** and jacket **28**. Alternatively, passage **73** can be formed exclusively in jacket **28** and electrode **26** with an axially directed opening.

Reference is now made to FIGS. **8** and **9** where spacecraft **171** is illustrated as including an array of thrusters of the type described supra in connection with FIGS. **1** or **2**. Space craft **171** includes an aft end housing **172** where propellant tank **11** and tank **11***a* (not shown in FIGS. **8** and **9**) are located.

Mounted on aft end housing **172**, remote from the remainder of space craft **171**, is thruster array **174**; each thruster in array **174** is of the type described in connection with FIGS. **1–7**. The thrusters of array **174** are symmetrically arranged in a circle about space craft axis **175** so that each of the thrusters is equi-spaced in a radial direction from axis **175**; adjacent thrusters are spaced from each other by equal angles. Each thruster has a longitudinal axis **178** tilted with respect to axis **175** so as to pass through the spacecraft center of gravity **179**. In the embodiments illustrated in FIGS. **8** and **9**, twenty such thrusters are provided. The thrusters of array **174** are mechanically connected by suitable conduits (not shown) to tanks **11** and **11***a* and are electrically connected to pulse forming networks **22**, mounted in housing **172**. One pulse forming network is provided for all of the thrusters in array **174**. Suitable switching circuits are provided between the pulse forming network and the thrusters of array **174** so diametrically opposed thrusters are simultaneously activated in pairs.

The thrusters of array **174** are mechanically connected to housing **176** that carries switches which connect each thruster to pulse forming network **22**. High voltage insulating sleeve **177** extends from fin **31** and jacket **28** of each of the thrusters in array **174**. Suitable electric and liquid lines extending through insulator jackets **177** provide the necessary fluid and electric connections to capillary passage **16**. Insulator jackets **177** are suitably mounted by struts (not shown) on housing **176** for the switches in the housing.

While there have been described and illustrated several specific embodiments of the invention, it will be clear that variations in the details of the embodiments specifically illustrated and described may be made without departing from the true spirit and scope of the invention as defined in the appended claims.

We claim:

1. An electrothermal thruster adapted to be mounted on a mass to be propelled comprising means for forming a capillary passage having an elongated plasma confining surface that is an outer boundary for plasma in the passage, the passage having an open end, electric means for forming a plasma discharge in the capillary passage, the capillary passage being arranged so that the plasma is ejected from the capillary passage only out of the open end, the ejected plasma being a thrust source for the mass, the plasma in the capillary passage having a very high pressure on the order of 1000 atmospheres, the capillary being constructed so plasma flowing out of the open end has a tendency to be highly ionized and dissociated, and a supersonic, equilibrium flow nozzle having an inlet positioned to be responsive to the plasma ejected from the open end, the nozzle having a high outlet to inlet area ratio and a high Reynolds number for achieving substantially adiabatic and equilibrium di-

rected kinetic energy and relatively low ionization, dissociation and thermal energies.

2. The apparatus of claim **1** wherein the ratio is at least 100:1.

3. The apparatus of claim **1** wherein the surface is a dielectric, the plasma forming means including a pair of electrodes longitudinally spaced by the dielectric from each other along the length of the passage.

4. The apparatus of claim **3** wherein the dielectric is an ablatable solid having low atomic weight elements that are dissociated into the plasma in response to the plasma discharge.

5. An electrothermal thrust adapted to be mounted on a mass to be propelled comprising means for forming a capillary passage having an elongated plasma confining surface that is an outer boundary for plasma in the passage, the passage having an open end, means for forming a plasma discharge in the capillary passage, the capillary passaging being arranged so that the plasma is ejected from the capillary passage only out of the open end, the ejected plasma being the thrust source for the mass, the passage having a second end opposite from the open end, the means for forming the plasma discharge including electrode means for establishing the discharge longitudinally of the capillary passage between the inlet and the open end, and means for intermittently establishing the discharge for an interval that is at least equal to the two way travel time of the acoustic energy in plasma in the capillary passage between the second and open ends.

6. The apparatus of claim **5** further including a supersonic nozzle immediately downstream of the open end for converting high pressure plasma flowing out of the open end into a directed high momentum plasma.

7. The apparatus of claim **5** wherein the surface is a dielectric, the electrode means including a pair of electrodes longitudinally spaced by the dielectric form each other along the length of the passage.

8. The apparatus of claim **7** further including a source of liquid propellant connected to the means for causing the atomized liquid to flow so that the atomized liquid propellant comprises the plasma source.

9. A method of operating an electrothermal thruster including a capillary passage having an elongated plasma confining surface that is an outer boundary for the plasma in the passage, the passage having an open end and a second end opposite from the open end, comprising electrically forming a plasma discharge longitudinally in the capillary passage between the open and second ends, the plasma discharge causing plasma to be formed in the passage and to be ejected only out of the open end of the capillary passage, the ejected plasma being a thrust source for a mass accelerated by the operating thruster, the discharge being intermittently formed for an interval that is at least equal to the two way travel time of acoustic energy in plasma in the capillary passage between the second and open ends.

* * * * *