archive ouverte UNIGE
http://archive-ouverte.unige.ch

Article

Recurrent rearrangements of chromosome 1q21.1 and variable pediatric phenotypes

MEFFORD, H. C. & Collaboration

GIMELLI, Stefania (Collab.), CONRAD, Bernard (Collab.), ANTONARAKIS, Stylianos (Collab.)

Abstract

BACKGROUND: Duplications and deletions in the human genome can cause disease or predispose persons to disease. Advances in technologies to detect these changes allow for the routine identification of submicroscopic imbalances in large numbers of patients. METHODS: We tested for the presence of microdeletions and microduplications at a specific region of chromosome 1q21.1 in two groups of patients with unexplained mental retardation, autism, or congenital anomalies and in unaffected persons. RESULTS: We identified 25 persons with a recurrent 1.35-Mb deletion within 1q21.1 from screening 5218 patients. The microdeletions had arisen de novo in eight patients, were inherited from a mildly affected parent in three patients, were inherited from an apparently unaffected parent in six patients, and were of unknown inheritance in eight patients. The deletion was absent in a series of 4737 control persons ($P=1.1x10(-7)$). We found considerable variability in the level of phenotypic expression of the microdeletion; phenotypes included mild-to-moderate mental retardation, microcephaly, cardiac abnormalities, and cataracts. The [...]

Reference

MEFFORD, H. C. & Collaboration, GIMELLI, Stefania (Collab.), CONRAD, Bernard (Collab.), ANTONARAKIS, Stylianos (Collab.). Recurrent rearrangements of chromosome 1q21.1 and variable pediatric phenotypes. *The New England journal of medicine*, 2008, vol. 359, no. 16, p. 1685-1699

PMID : 18784092
DOI : 10.1056/NEJMoa0805384

Available at:
http://archive-ouverte.unige.ch/unige:9219

Disclaimer: layout of this document may differ from the published version.

UNIVERSITÉ
DE GENÈVE

NIH Public Access
Author Manuscript
N Engl J Med. Author manuscript; available in PMC 2009 June 30.

Published in final edited form as:
N Engl J Med. 2008 October 16; 359(16): 1685–1699. doi:10.1056/NEJMoa0805384.

Recurrent Rearrangements of Chromosome 1q21.1 and Variable Pediatric Phenotypes

Heather C. Mefford, M.D., Ph.D., **Andrew J. Sharp, Ph.D.**, **Carl Baker, B.S.**, **Andy Itsara, B.A.**, **Zhaoshi Jiang, M.D.**, **Karen Buysse, M.S.**, **Shuwen Huang, Ph.D.**, **Viv K. Maloney, B.Sc.**, **John A. Crolla, Ph.D.**, **Diana Baralle, M.B., B.S.**, **Amanda Collins, B.M.**, **Catherine Mercer, B.M.**, **Koen Norga, M.D., Ph.D.**, **Thomy de Ravel, M.D.**, **Koen Devriendt, M.D., Ph.D.**, **Ernie M.H.F. Bongers, M.D., Ph.D.**, **Nicole de Leeuw, Ph.D.**, **William Reardon, M.D.**, **Stefania Gimelli, Ph.D.**, **Frederique Bena, Ph.D.**, **Raoul C. Hennekam, M.D., Ph.D.**, **Alison Male, M.R.C.P.**, **Lorraine Gaunt, Ph.D.**, **Jill Clayton-Smith, M.D.**, **Ingrid Simonic, Ph.D.**, **Soo Mi Park, M.B., B.S., Ph.D.**, **Sarju G. Mehta, M.D.**, **Serena Nik-Zainal, M.R.C.P.**, **C. Geoffrey Woods, M.D.**, **Helen V. Firth, D.M.**, **Georgina Parkin, B.Sc.**, **Marco Fichera, Ph.D.**, **Santina Reitano, M.D.**, **Mariangela Lo Giudice, B.S.**, **Kelly E. Li, Ph.D.**, **Iris Casuga, B.S.**, **Adam Broomer, M.S.**, **Bernard Conrad, M.D.**, **Markus Schwerzmann, M.D.**, **Lorenz Räber, M.D.**, **Sabina Gallati, Ph.D.**, **Pasquale Striano, M.D., Ph.D.**, **Antonietta Coppola, M.D.**, **John L. Tolmie, F.R.C.P.**, **Edward S. Tobias, F.R.C.P.**, **Chris Lilley, M.R.P.C.H.**, **Lluis Armengol, Ph.D.**, **Yves Spysschaert, M.D.**, **Patrick Verloo, M.D.**, **Anja De Coene, M.D.**, **Linde Goossens, M.D.**, **Geert Mortier, M.D., Ph.D.**, **Frank Speleman, Ph.D.**, **Ellen van Binsbergen, M.Sc.**, **Marcel R. Nelen, Ph.D.**, **Ron Hochstenbach, Ph.D.**, **Martin Poot, Ph.D.**, **Louise Gallagher, M.D., Ph.D.**, **Michael Gill, M.D.**, **Jon McClellan, M.D.**, **Mary-Claire King, Ph.D.**, **Regina Regan, Ph.D.**, **Cindy Skinner, R.N.**, **Roger E. Stevenson, M.D.**, **Stylianos E. Antonarakis, M.D., Ph.D.**, **Caifu Chen, Ph.D.**, **Xavier Estivill, M.D., Ph.D.**, **Björn Menten, Ph.D.**, **Giorgio Gimelli, Ph.D.**, **Susan Gribble, Ph.D.**, **Stuart Schwartz, Ph.D.**, **James S. Sutcliffe, Ph.D.**, **Tom Walsh, Ph.D.**, **Samantha J.L. Knight, Ph.D.**, **Jonathan Sebat, Ph.D.**, **Corrado Romano, M.D.**, **Charles E. Schwartz, Ph.D.**, **Joris A. Veltman, Ph.D.**, **Bert B.A. de Vries, M.D., Ph.D.**, **Joris R. Vermeesch, Ph.D.**, **John C.K. Barber, Ph.D.**, **Lionel Willatt, Ph.D.**, **May Tassabehji, Ph.D.**, and **Evan E. Eichler, Ph.D.**

University of Washington School of Medicine (H.C.M., C.B., A.I., Z.J., M.-C.K., E.E.E.), University of Washington (J.M., M.-C.K., T.W.), and Howard Hughes Medical Institute (E.E.E.) — all in Seattle; University of Geneva Medical School (A.J.S., S.E.A.) and Geneva University Hospitals (S. Gimelli, F.B.) — both in Geneva; Center for Medical Genetics (K.B., G.M., F.S., B.M.) and Division of Pediatric Neurology and Metabolism (Y.S., P.V., A.D.C., L. Goossens), Ghent University Hospital, Ghent, Belgium; National Genetics Reference Laboratory (S.H., J.A.C., J.C.K.B.) and Wessex Regional Genetics Laboratory (V.K.M., J.A.C., J.C.K.B.), Salisbury National Health Service (NHS) Foundation Trust, Salisbury; Wessex Clinical Genetics Service, Southampton University Hospitals Trust, Southampton (D.B., A.C., C.M.); University College London (R.C.H.) and Great Ormond Street Hospital for Children NHS Trust (A.M.), London; Department of Clinical Genetics (L. Gaunt, J.C.-S.) and Academic Unit of Medical Genetics, University of Manchester (M.T.), St. Mary's Hospital, Manchester; Addenbrooke's Hospital NHS Trust (I.S., S.M.P., S.G.M., S.N.-Z., C.G.W., H.V.F., G.P., L.W.) and Wellcome Trust Sanger Institute (S. Gribble), Cambridge; and the Wellcome Trust Centre for Human Genetics, Churchill Hospital, Oxford (R.R., S.J.L.K.) — all in the United Kingdom; Children's Hospital and Vlaams Interuniversitair Instituut Voor Biotechnologie (K.N.) and Center for Human Genetics (T.R., K.D., J.R.V.), Catholic University of Leuven, Leuven, Belgium;

Copyright © 2008 Massachusetts Medical Society.

Address reprint requests to Dr. Eichler at the Department of Genome Sciences, University of Washington and Howard Hughes Medical Institute, Foege Bldg. S413A, Box 355065, 1705 NE Pacific St., Seattle, WA 98195, or at E-mail: eee@gs.washington.edu..
Drs. Mefford and Sharp contributed equally to this article.

Radboud University Nijmegen Medical Center, Nijmegen (E.M.H.F.B., N.L., J.A.V., B.B.A.V.); University Medical Center, Utrecht (E.B., M.R.N., R.H., M.P.); and Academic Medical Center, Amsterdam (R.C.H.) — all in the Netherlands; Our Lady's Hospital for Sick Children (W.R.) and St. James's Hospital (L. Gallagher, M.G.) — both in Dublin; Istituto di Ricovero e Cura a Carattere Scientifico (IRCCS) Associazione Oasi Maria Santissima, Troina (M.F., S.R., M.L.G., C.R.); Università Federico II, Naples (P.S., A.C.); and Unità Neuromuscolare Ospedale Gaslini (P.S.) and Istituto G. Gaslini (G.G.), Genoa — all in Italy; Applied Biosystems, Foster City, CA (K.E.L., I.C., A.B., C.C.); Bern University Children's Hospital (B.C., S. Gallati) and Department of Cardiology, University Hospital Bern (M.S., L.R.) — both in Bern, Switzerland; Royal Hospital for Sick Children, Glasgow, Scotland (J.L.T., E.S.T., C.L.); Biomedical Research Center for Epidemiology and Public Health (CIBERESP) and Pompeu Fabra University, Barcelona (L.A., X.E.); Greenwood Genetic Center, Greenwood, SC (C.S., R.E.S., C.E.S.); University of Chicago, Chicago (S.S.); Vanderbilt University, Nashville (J.S.S.); and Cold Spring Harbor Laboratory, Cold Spring Harbor, NY (J.S.).

Abstract

BACKGROUND—Duplications and deletions in the human genome can cause disease or predispose persons to disease. Advances in technologies to detect these changes allow for the routine identification of submicroscopic imbalances in large numbers of patients.

METHODS—We tested for the presence of microdeletions and microduplications at a specific region of chromosome 1q21.1 in two groups of patients with unexplained mental retardation, autism, or congenital anomalies and in unaffected persons.

RESULTS—We identified 25 persons with a recurrent 1.35-Mb deletion within 1q21.1 from screening 5218 patients. The microdeletions had arisen de novo in eight patients, were inherited from a mildly affected parent in three patients, were inherited from an apparently unaffected parent in six patients, and were of unknown inheritance in eight patients. The deletion was absent in a series of 4737 control persons ($P = 1.1\times10^{-7}$). We found considerable variability in the level of phenotypic expression of the microdeletion; phenotypes included mild-to-moderate mental retardation, microcephaly, cardiac abnormalities, and cataracts. The reciprocal duplication was enriched in the nine children with mental retardation or autism spectrum disorder and other variable features ($P = 0.02$). We identified three deletions and three duplications of the 1q21.1 region in an independent sample of 788 patients with mental retardation and congenital anomalies.

CONCLUSIONS—We have identified recurrent molecular lesions that elude syndromic classification and whose disease manifestations must be considered in a broader context of development as opposed to being assigned to a specific disease. Clinical diagnosis in patients with these lesions may be most readily achieved on the basis of genotype rather than phenotype.

RECENT ADVANCES IN TECHNOLOGIES such as comparative genomic hybridization (CGH; see Glossary) allow for the routine detection of submicroscopic deletions and duplications. Several studies of persons with mental retardation or congenital anomalies of unknown cause have led to the identification of new genomic disorders.[1-10] Classically, criteria that have been applied to determine whether a given rearrangement is causative include de novo appearance of the deletion or duplication in an affected individual (i.e., it is not present in unaffected parents), recurrence of the same or an overlapping event in similarly affected persons, and absence of the deletion or duplication in a control population. Examples of genomic disorders with these features include the Williams–Beuren syndrome, the 17q21.31 microdeletion syndrome, and the Prader–Willi and Angelman syndromes.

As more patients are identified with a given unbalanced microrearrangement, it has become clear that some genomic disorders have high penetrance but a wide range of phenotypic severity. For example, although 90% of persons with the 22q11 deletion syndrome have the same 3-Mb deletion on chromosome 22, the phenotypic features are highly variable. Congenital heart disease is found in most (74%) but not all carriers of the deletion, and cleft palate is found in 27% of carriers (reviewed in Robin and Shprintzen[11]). More recently, reports of microdeletions or duplications with apparently incomplete penetrance and variable expressivity have been identified in mental retardation–multiple congenital anomalies, autism, and other psychiatric disorders.[12-16] The 1q21.1 microdeletions associated with the thrombocytopenia–absent radius syndrome are necessary but not sufficient to cause disease.[17] As these reports accumulate, it is becoming clear that the phenotypes associated with imbalances of some regions of the genome can be variable, and modifiers probably play an important role. The ascertainment and description of patients with a specific chromosomal rearrangement critically affects the spectrum of phenotypes associated with it.

Glossary

Comparative genomic hybridization (CGH): An assay in which DNA samples from patients and from reference genomes are labeled with different fluorescent dyes and cohybridized to an array containing known DNA sequences. Differences in relative fluorescence intensities of hybridized DNA on the microarray reflect differences in copy number between the genome of the patients and reference DNA.

Nonallelic homologous recombination: Aberrant meiotic recombination between nonallelic segmental duplications that are highly homologous but located at different places on the chromosome. This recombination causes duplication, deletion, or inversion of the sequence between the homologous blocks of DNA.

Segmental duplications: Large stretches of DNA (>1 kb in length), with more than 90% sequence identity, that are present at two or more places in the genome. These duplication blocks often include one or more genes and constitute approximately 5% of the human genome. They are also referred to as low-copy repeats or duplicons.

METHODS

POPULATIONS OF PATIENTS

DNA samples were obtained from the series described in Tables 1A and 1B in the Supplementary Appendix (available with the full text of this article at www.nejm.org) after approval by local institutional review boards at each of the participating centers in Europe and the United States. Series 1 and 2, 4 through 11, 13 through 15, and the Dutch series of 788 patients came from diagnostic referral centers to which the majority of patients (95%) were referred for mental retardation with or without other features. Series 3 and 12 comprise probands with a diagnosis of autism according to Autism Diagnostic Interview–Revised (ADI-R) and Autism Diagnostic Observation Schedule (ADOS) criteria. Written informed consent was provided by all patients or, if children, by their parent or guardian.

DETERMINING VARIATION IN COPY NUMBER

Affected Persons—The method of screening for changes in copy number for each series is included in Table 1A in the Supplementary Appendix. The Dutch series of patients was screened using array-based CGH involving a bacterial artificial chromosome microarray, as described in Table 1B in the Supplementary Appendix. Rearrangements of 1q21.1 were further analyzed with the use of custom oligonucleotide arrays (NimbleGen Systems). Details are given in the Methods section of the Supplementary Appendix.

Unaffected Persons—We evaluated 2063 unaffected persons, using HumanHap 300, HumanHap 550, or HumanHap 650Y Genotyping BeadChips (Illumina) (Table 2 in the

Supplementary Appendix; 91, 206, or 212 probes used, respectively, within the critical region). Hybridization, data analysis, and copy-number analysis, with particular reference to chromosome 1q21.1 (mapping between genome coordinates 143,500,000 and 145,000,000 on chromosome 1, according to National Center for Biotechnology Information [NCBI] build 35), were performed according to published protocols.[21] We also evaluated 300 unaffected persons, using a quantitative real-time polymerase-chain-reaction (PCR) assay for changes in copy number at five loci within the region of minimal deletion (primer list available on request). Details about this assay, as well as information about the TaqMan quantitative PCR, DNA-methylation studies, sequence analysis, and fluorescence in situ hybridization (FISH), are given in the Supplementary Appendix.

RESULTS

CHROMOSOME 1Q21.1 REARRANGEMENTS IN AFFECTED PERSONS

We previously described one person with a deletion of 1q21.1 and another with an overlapping duplication in a series of 390 persons screened by array-based CGH involving a bacterial artificial chromosome microarray.[2,8] These persons had global delay, growth retardation, and seizures (Patient 1) (Table 1) and mental retardation, growth retardation, and facial dysmorphism (Patient 2) (Table 3 in the Supplementary Appendix). In a collaborative study of 3788 patients from 12 centers in Europe and the United States using array-based CGH (Table 1A in the Supplementary Appendix), we identified an additional 22 probands with deletion and 8 probands with duplication. Targeted screening of another 1040 persons with unexplained mental retardation, by means of two TaqMan quantitative PCR assays within the commonly deleted region, resulted in detection of a deletion in two additional patients. Thus, from a total of 5218 persons with idiopathic mental retardation, autism, or congenital anomalies, we have a series of 25 unrelated probands with overlapping deletions of 1q21.1 (0.5%) (Fig. 1A) and 9 persons with the apparently reciprocal duplication (0.2%) (Fig. 1B). Five persons (four with a 1q21.1 deletion and one with a duplication) also carried one or more additional chromosome abnormalities that could have contributed to their phenotype and were therefore excluded from further analysis (see Table 4 in the Supplementary Appendix for their phenotypic features).

The minimally deleted region spans approximately 1.35 Mb (on chromosome 1, 143.65 to 145 Mb [according to NCBI build 35], or 145 to 146.35 Mb [according to NCBI build 36]) and includes at least seven genes. The majority of persons studied have deletions with breakpoints (BP) in segmental-duplication blocks BP3 and BP4 (see Glossary and Fig. 1). Patient 12 has a larger, atypical deletion approximately 5.5 Mb in size that extends more proximally toward the centromere than the common deletion (on chromosome 1, 142.5 to 148.0 Mb [NCBI build 36]) (Fig. 1 in the Supplementary Appendix). Of the 21 probands without secondary karyotype abnormalities, the 1q21.1 deletion was de novo in 7 (3 with maternal origin, 1 with paternal origin, and 3 with undetermined parental origin), maternally inherited in 3, paternally inherited in 4, and of unknown inheritance (parents unavailable for study) in 7 (Table 1).

The phenotypes of persons with 1q21.1 deletions are described in Table 1 (21 patients without additional chromosomal abnormalities) and Table 4 in the Supplementary Appendix (4 patients with additional chromosomal abnormalities). Pedigrees of eight probands are shown in Figure 2. The majority of persons with a deletion have a history of mild-to-moderate developmental delay (16 of 21 [76.2%]) and dysmorphic features (17 of 21 [81.0%]), consistent with their ascertainment criteria. Three parents are also mildly affected; however, five probands had normal cognitive development, and four apparently unaffected parents have the same deletion. In addition, 14 of the 21 patients (66.7%) and 2 parents with the deletion have microcephaly or relative microcephaly. Other phenotypic features noted in more than one patient with the deletion include ligamentous laxity or joint hypermobility (five patients), congenital heart abnormality (six patients), hypotonia (five patients), seizures (three patients) and cataracts (three patients). There are no notable phenotypic differences among carriers of a deletion with different breakpoints. Consistent with variability of phenotypic outcome, we noted that the same region was recently described in an adult patient with schizophrenia[22] (Table 4 in the Supplementary Appendix). We obtained DNA from this patient to map the breakpoints; our results show that the deletion in this patient with adult-onset schizophrenia is apparently identical to the common 1.35-Mb deletion found in our sample of patients with primarily childhood-onset phenotypes (Fig. 3).

We also detected the reciprocal 1q21.1 duplication in nine persons (Fig. 1B), one of whom carried an additional large chromosomal abnormality and was thus excluded from further analysis (Table 4 in the Supplementary Appendix). Of the remaining eight patients with duplication, two had inheritance from an unaffected father, two had de novo duplication (not known to be of parental origin), and four did not have parental DNA available for analysis. Four of the eight patients with duplication (50.0%) had autism or autistic behaviors (Table 3 in the Supplementary Appendix). Other common phenotypic features of the eight duplication carriers include mild-to-moderate mental retardation (in five [62.5%]), macrocephaly or relative macrocephaly (in four [50.0%]), and mild dysmorphic features (in five [62.5%]).

In an independent sample of 788 patients with mental retardation and congenital anomalies from the Netherlands, we identified deletion in 3 patients (0.4%) and duplication in another 3 patients (0.4%). The phenotypic features and inheritance patterns of these patients are listed in Table 1B in the Supplementary Appendix.

DELETIONS AND DUPLICATIONS IN UNAFFECTED PERSONS

To assess the frequency of 1q21.1 rearrangements in the general population, we evaluated data on copy number from three control populations: 2063 persons evaluated by means of single-nucleotide polymorphism (SNP)–genotyping bead arrays[21] (Itsara A: personal communication), 300 persons evaluated by means of quantitative PCR performed on specimens from five different locations within the minimal-deletion region, and 2374 persons from previously published studies for which the copy-number variation of the 1q21.1 region was genotyped (Table 2 in the Supplementary Appendix).[18,20,23-29] In this series of 4737 controls, we found no deletions of the 1q21.1 minimal-deletion region. Two controls each had one small duplication (117 kb and 184 kb) at the distal end of the minimal-deletion region, and only one control had confirmed duplication of the entire minimal 1q21.1 rearrangement region[29] (Feuk L: personal communication). Thus, the frequency of the 1.35-Mb deletion is clearly enriched in affected persons as compared with controls (25 of 5218 patients vs. 0 of 4737 controls, $P = 1.1\times10^{-7}$ by Fisher's exact test). Although detected at a lower frequency in our series, the reciprocal duplication also appears to be enriched in affected persons (9 of 5218 patients, vs. 1 of 4737 controls; $P = 0.02$ by Fisher's exact test).

GENOMIC STRUCTURE OF THE 1Q21.1 REGION

The genomic structure of the 1q21.1 breakpoint regions is extremely complex, with at least four large segmental-duplication blocks ranging in size from 270 kb to 2.2 Mb (Fig. 1, and Fig. 1 in the Supplementary Appendix), most of which exhibit copy-number polymorphism in the general population[25,27] (see also the Database of Genomic Variants, http://projects.tcag.ca/variation/). A large inversion polymorphism that spans the recurrent deletion–duplication region, a feature associated with many other recurrent genomic disorders, has also been described.[27,30] The complexity of 1q21.1 is underscored by the fact that there are still 15 assembly gaps, representing approximately 700 kb of missing sequence, in the most recent NCBI genome build (build 36). Of the 5.4 Mb of sequence within 1q21.1, only 25% represents unique (i.e., nonduplicated) sequence.

Although the complexity of the region complicates mapping efforts, our high-density array-based CGH results show that the proximal and distal breakpoints of the deletion–duplication events map within large segmental-duplication blocks. Our analysis reveals four possible breakpoint regions, BP1 and BP4 (Fig. 1, and Fig. 1 in the Supplementary Appendix), as well as BP2 and BP3, which correspond to the previously described breakpoints associated with the thrombocytopenia–absent radius syndrome.[17] Breakpoints of the most common 1.35-Mb deletion map to BP3 and BP4, which share 281 kb of sequence with more than 99.9% identity (Table 5 in the Supplementary Appendix). The structure of the 1q21.1 region (with multiple large blocks of highly homologous segmental duplication), the frequency of recurrent deletions or duplications, and the additional observation of reciprocal deletion and duplication events strongly suggest nonallelic homologous recombination as the mechanism that generates the deletion and duplication.

The presence of numerous assembly gaps in the 1q21.1 region hinders precise mapping of the chromosomal breakpoints that flank each duplication or deletion. Moreover, these gaps may contain genes that are absent from the current reference sequence and could potentially contribute to phenotypic differences between deletion carriers. One example is a partially duplicated copy of the hydrocephalus-inducing homologue (mouse) 2 gene *HYDIN2*, recently mapped to 1q21.1.[31] We confirmed the presence of a *HYDIN* homologue within 1q21.1 by using FISH analysis involving two chromosome 16q22 fosmids containing the chromosome-16 *HYDIN* sequence (Fig. 2 in the Supplementary Appendix). Analysis of two deletion carriers (Patient 7 and her unaffected mother) revealed that the *HYDIN2* locus lies within the commonly deleted region and therefore may reside in one of the gaps between BP3 and BP4. Because probes designed to detect *HYDIN* also hybridize with *HYDIN2* sequence, data obtained through CGH studies, involving a whole-genome array, of persons with the 1q21.1 deletion suggest the existence of an approximately 35-kb deletion at 16q22 (Fig. 2 in the Supplementary Appendix) — that is, a false positive for the 16q22 deletion. FISH studies revealed only the 1q21.1 deletion and did not confirm the apparent 16q22 deletion.

ANALYSIS OF POTENTIAL MODIFIERS OF PHENOTYPE

Given associations between *GJA5* (the gene encoding connexin 40) and cardiac phenotypes[32-35] and between *GJA8* (the gene encoding connexin 50) and eye phenotypes,[36-38] we hypothesized that coding variants on the remaining *GJA5* or *GJA8* allele of deletion carriers may contribute to the cardiac or eye phenotypes, respectively, seen in some patients. However, we sequenced the coding and upstream regions of both genes in 11 deletion carriers and found no mutations (Table 6 in the Supplementary Appendix). We also investigated the possibility that epigenetic differences on the single remaining 1q21.1 allele might underlie the variable phenotype of those with 1q21.1 deletions. We analyzed the CpG (cytidine–phosphate–guanosine) methylation status within the deletion region in an affected 1q21.1 deletion carrier (Patient 7) and in her mother, who also carries the deletion but is unaffected. We found no significant differences between them (data not shown).

DISCUSSION

Our data show that 1q21.1 deletions are associated with a broad array of pediatric developmental abnormalities. There is considerable phenotypic diversity associated with haploinsufficiency of 1q21.1, consistent with previous reports of apparently identical 1q21.1 deletions in patients with different phenotypes, including isolated heart defects,[39] cataracts,[27] mullerian aplasia,[40] autism,[41] and schizophrenia.[13,14,22] We identified several unaffected deletion carriers; however, it is possible that apparently unaffected parents who have a 1q21.1 deletion could also have subtle phenotypic features consistent with the deletion that would become evident on further clinical evaluation. In one of our patients (Patient 2), for example, subtle cataracts and a patent ductus arteriosus were detected only after directed studies were performed after discovery of the 1q21 deletion (Table 1A in the Supplementary Appendix).

The reciprocal duplication was detected less frequently in our series, a finding that is consistent with recent studies showing that rates of deletion mediated by nonallelic homologous recombination are higher than that for duplications in the male germ line.[42] Nonetheless, the duplication is also enriched in affected persons as compared with controls (P=0.02). Seven of the eight duplication carriers have learning or developmental delay or mental retardation. Four of the eight duplication carriers have autistic behaviors or autism, consistent with previously reported 1q21.1 duplications in patients with autism.[41] Two patients were initially identified among 141 patients with autism, a finding that suggests even greater enrichment in this population (vs. 1 of 4737 controls, P=0.002 by Fisher's exact test). Other phenotypes described in the majority of patients for whom data are available include macrocephaly or relative macrocephaly. However, because of the small number of patients with a duplication event in our series, identification of additional carriers will be required to determine whether these clinical manifestations are consistent with the presence of the duplication.

Several possibilities may account for the phenotypic variability we found among carriers of 1q21.1 rearrangements, including variation in genetic background, epigenetic phenomena such as imprinting, expression or regulatory variation among genes in the rearrangement region, and (in the case of deletions) the unmasking of recessive variants residing on the single remaining allele. It is known, for example, that coding variants on the nondeleted allele in carriers of the velocardiofacial syndrome deletion can modify the phenotypes of patients.[43,44] Sequence analysis of *GJA5* and *GJA8* (the genes previously implicated in cardiac and eye phenotypes, respectively) in 11 deletion carriers yielded no data to support the unmasking of recessive variants as a cause of phenotypic variability. Likewise, preliminary data from methylation analyses of an affected deletion carrier and her mother, who also carried the deletion but was unaffected, suggest that differences in the methylation status of the nondeleted 1q21.1 locus does not contribute to the variability in phenotype. Finally, parent-of-origin studies reveal both maternal and paternal transmission of the deletion, making it unlikely that imprinting plays a role in phenotypic variability.

Our results emphasize the importance of rare structural variants in human disease; they also demonstrate some of the challenges. First, large samples of patients and controls are required to show that a specific variant is pathogenic. Although there have been several reports of patients with 1q21.1 deletions in studies of specific diseases,[22,39-41] our study shows that recurrent 1q21.1 microdeletions are significantly associated with pediatric disease, through systematic comparison of the frequency of rearrangements in affected and unaffected persons. Second, detailed clinical evaluations of affected persons disclosed a much broader spectrum of phenotypes than anticipated, dispelling any notion of syndromic disease. While this article was being reviewed before publication, two groups reported enrichment of 1q21.1 deletions in persons with schizophrenia[13,14]; they report deletions in 0.26% of patients with schizophrenia, as compared with our finding of deletions in 0.5% of persons with developmental abnormalities. These results confirm the association of 1q21.1 rearrangements with a broad spectrum of phenotypes but also further dispel the notion that rare copy-number variants will necessarily follow the one gene (or one rearrangement)–one disease model.

The phenotypic diversity, incomplete penetrance, and lack of distinct syndromic features associated with 1q21 rearrangements will complicate genetic diagnosis and counseling. For clinicians caring for patients with developmental abnormalities, the identification of a 1q21 rearrangement by means of diagnostic array-based CGH should be considered a clinically significant finding and probably an influential genetic factor contributing to the phenotype. Evaluation of family members may reveal apparently unaffected (or mildly affected) persons carrying the same rearrangement. Given the spectrum of possible outcomes associated with 1q21 rearrangements, such persons should be monitored in the long term for learning disabilities, autism, or schizophrenia or other neuropsychiatric disorders. Counseling in the prenatal setting will present the greatest challenge: although the likelihood of an abnormal outcome is high in a person with a 1q21.1 rearrangement, current knowledge does not allow us to predict which abnormalities will occur in any given person. Further investigation of genetic and environmental modifiers may explain such variable expressivity but requires characterization of an even larger number of patients with a 1q21 deletion. Data on rare, de novo structural variants are collectively beginning to explain an increasingly greater fraction (approximately 15%) of patients with developmental delay, autism, schizophrenia, or other neuropsychiatric disorders, and our study adds 1q21.1 as a locus to include in screening panels for such patients.

Supplementary Material

Refer to Web version on PubMed Central for supplementary material.

Acknowledgments

Supported in part by grants from the National Institutes of Health (HD043569, to Dr. Eichler), the South Carolina Department of Disabilities and Special Needs (to Drs. Skinner, Stevenson, and Schwartz), the Wellcome Trust (061183, to Dr. Tassabehji), the André & Cyprien Foundation and the University Hospitals of Geneva (to Drs. Antonarakis, Bena, and Gallati), and the European Union (project 219250, to Dr. Sharp; AnEUploidy project 037627, to Drs. Leeuw, Armengol, Antonarakis, Estivill, Veltman, and de Vries). The Irish Autism Study was funded by the Wellcome Trust and the Health Research Board (a grant to Drs. Gallagher and Gill). Dr. Poot was supported by a grant from the Dutch Foundation for Brain Research (Hersenstichting grant 2008(1) 34); Drs. Regan and Knight, by the Oxford Partnership Comprehensive Biomedical Research Centre; Dr. Willatt, by the Cambridge Biomedical Research Centre, with funding from the United Kingdom Department of Health's National Institute for Health Research Biomedical Research Centres funding scheme; Drs. Huang and Maloney, as part of the National Genetics Reference Laboratory (Wessex) by the United Kingdom Department of Health; Ms. Buysse, as a research assistant of the Research Foundation–Flanders (FWO–Vlaanderen); and Dr. Eichler, as an investigator of the Howard Hughes Medical Institute. The views expressed in this publication are those of the authors and not necessarily those of the United Kingdom Department of Health.

Drs. Mefford and Sharp report giving invited Webinars and seminars for NimbleGen, a manufacturer of microarrays; Drs. Li, Casuga, Broomer, and Chen report being employees of Applied Biosystems, manufacturer of the TaqMan assay and reagents; and Dr. Eichler reports being an invited speaker at an Applied Biosystems workshop on human copy-number variation. No other potential conflict of interest relevant to this article was reported.

We thank Francesca Antonacci for performing fluorescence in situ hybridization analysis. This study used data from the SNP Database at the National Institute of Neurological Disorders and Stroke Human Genetics Resource Center DNA and Cell Line Repository (http://ccr.coriell.org/ninds), as well as clinical data. The Illumina genotyping was performed in the laboratories of Drs. Singleton and Hardy (National Institute of Aging [NIA], Laboratory of Neurogenetics [LNG]), Bethesda, MD.

REFERENCES

1. Barber JC, Maloney VK, Huang S, et al. 8p23.1 Duplication syndrome: a novel genomic condition with unexpected complexity revealed by array CGH. Eur J Hum Genet 2008;16:18–27. [PubMed: 17940555]
2. de Vries BB, Pfundt R, Leisink M, et al. Diagnostic genome profiling in mental retardation. Am J Hum Genet 2005;77:606–16. [PubMed: 16175506]
3. Friedman JM, Baross A, Delaney AD, et al. Oligonucleotide microarray analysis of genomic imbalance in children with mental retardation. Am J Hum Genet 2006;79:500–13. [PubMed: 16909388]
4. Koolen DA, Vissers LE, Pfundt R, et al. A new chromosome 17q21.31 microdeletion syndrome associated with a common inversion polymorphism. Nat Genet 2006;38:999–1001. [PubMed: 16906164]

5. Mefford HC, Clauin S, Sharp AJ, et al. Recurrent reciprocal genomic rearrangements of 17q12 are associated with renal disease, diabetes, and epilepsy. Am J Hum Genet 2007;81:1057–69. [PubMed: 17924346]

6. Menten B, Maas N, Thienpont B, et al. Emerging patterns of cryptic chromosomal imbalance in patients with idiopathic mental retardation and multiple congenital anomalies: a new series of 140 patients and review of published reports. J Med Genet 2006;43:625–33. [PubMed: 16490798]

7. Rosenberg C, Knijnenburg J, Bakker E, et al. Array-CGH detection of micro rearrangements in mentally retarded individuals: clinical significance of imbalances present both in affected children and normal parents. J Med Genet 2006;43:180–6. [PubMed: 15980116]

8. Sharp AJ, Hansen S, Selzer RR, et al. Discovery of previously unidentified genomic disorders from the duplication architecture of the human genome. Nat Genet 2006;38:1038–42. [PubMed: 16906162]

9. Sharp AJ, Mefford HC, Li K, et al. A recurrent 15q13.3 microdeletion syndrome associated with mental retardation and seizures. Nat Genet 2008;40:322–8. [PubMed: 18278044]

10. Sharp AJ, Selzer RR, Veltman JA, et al. Characterization of a recurrent 15q24 microdeletion syndrome. Hum Mol Genet 2007;16:567–72. [PubMed: 17360722]

11. Robin NH, Shprintzen RJ. Defining the clinical spectrum of deletion 22q11.2. J Pediatr 2005;147:90–6. [PubMed: 16027702]

12. Hannes FD, Sharp AJ, Mefford HC, et al. Recurrent reciprocal deletions and duplications of 16p13.11: the deletion is a risk factor for MR/MCA while the duplication may be a rare benign variant. J Med Genet. June 11;2008 (Epub ahead of print)

13. Stefansson H, Rujescu D, Cichon S, et al. Large recurrent microdeletions associated with schizophrenia. Nature. July 30;2008 (Epub ahead of print)

14. Stone JL, O'Donovan MC, Gurling H, et al. Rare chromosomal deletions and duplications increase risk of schizophrenia. Nature. July 30;2008 (Epub ahead of print)

15. Ullmann R, Turner G, Kirchhoff M, et al. Array CGH identifies reciprocal 16p13.1 duplications and deletions that predispose to autism and/or mental retardation. Hum Mutat 2007;28:674–82. [PubMed: 17480035]

16. Weiss LA, Shen Y, Korn JM, et al. Association between microdeletion and microduplication at 16p11.2 and autism. N Engl J Med 2008;358:667–75. [PubMed: 18184952]

17. Klopocki E, Schulze H, Strauss G, et al. Complex inheritance pattern resembling autosomal recessive inheritance involving a microdeletion in thrombocytopenia-absent radius syndrome. Am J Hum Genet 2007;80:232–40. [PubMed: 17236129]

18. Sharp AJ, Locke DP, McGrath SD, et al. Segmental duplications and copy-number variation in the human genome. Am J Hum Genet 2005;77:78–88. [PubMed: 15918152]

19. Cuscó I, del Campo M, Vilardell M, et al. Array-CGH in patients with Kabuki-like phenotype: identification of two patients with complex rearrangements including 2q37 deletions and no other recurrent aberration. BMC Med Genet 2008;9:27. [PubMed: 18405349]

20. Sebat J, Lakshmi B, Troge J, et al. Large-scale copy number polymorphism in the human genome. Science 2004;305:525–8. [PubMed: 15273396]

21. Peiffer DA, Le JM, Steemers FJ, et al. High-resolution genomic profiling of chromosomal aberrations using Infinium whole-genome genotyping. Genome Res 2006;16:1136–48. [PubMed: 16899659]

22. Walsh T, McClellan JM, McCarthy SE, et al. Rare structural variants disrupt multiple genes in neurodevelopmental pathways in schizophrenia. Science 2008;320:539–43. [PubMed: 18369103]

23. de Ståhl TD, Sandgren J, Piotrowski A, et al. Profiling of copy number variations (CNVs) in healthy individuals from three ethnic groups using a human genome 32 K BAC-clone-based array. Hum Mutat 2008;29:398–408. [PubMed: 18058796]

24. Iafrate AJ, Feuk L, Rivera MN, et al. Detection of large-scale variation in the human genome. Nat Genet 2004;36:949–51. [PubMed: 15286789]

25. Locke DP, Sharp AJ, McCarroll SA, et al. Linkage disequilibrium and heritability of copy-number polymorphisms within duplicated regions of the human genome. Am J Hum Genet 2006;79:275–90. [PubMed: 16826518]

26. Pinto D, Marshall C, Feuk L, Scherer SW. Copy-number variation in control population cohorts. Hum Mol Genet 2007;16(2):R168–R173. [PubMed: 17911159][Erratum, Hum Mol Genet 2008;17:166−7.]

27. Redon R, Ishikawa S, Fitch KR, et al. Global variation in copy number in the human genome. Nature 2006;444:444–54. [PubMed: 17122850]
28. Simon-Sanchez J, Scholz S, Fung HC, et al. Genome-wide SNP assay reveals structural genomic variation, extended homozygosity and cell-line induced alterations in normal individuals. Hum Mol Genet 2007;16:1–14. [PubMed: 17116639]
29. Zogopoulos G, Ha KC, Naqib F, et al. Germ-line DNA copy number variation frequencies in a large North American population. Hum Genet 2007;122:345–53. [PubMed: 17638019]
30. Kidd JM, Cooper GM, Donahue WF, et al. Mapping and sequencing of structural variation from eight human genomes. Nature 2008;453:56–64. [PubMed: 18451855]
31. Doggett NA, Xie G, Meincke LJ, et al. A 360-kb interchromosomal duplication of the human HYDIN locus. Genomics 2006;88:762–71. [PubMed: 16938426]
32. Gu H, Smith FC, Taffet SM, Delmar M. High incidence of cardiac malformations in connexin40-deficient mice. Circ Res 2003;93:201–6. [PubMed: 12842919]
33. Firouzi M, Ramanna H, Kok B, et al. Association of human connexin40 gene polymorphisms with atrial vulnerability as a risk factor for idiopathic atrial fibrillation. Circ Res 2004;95(4):e29–e33. [PubMed: 15297374]
34. Hauer RN, Groenewegen WA, Firouzi M, Ramanna H, Jongsma HJ. Cx40 polymorphism in human atrial fibrillation. Adv Cardiol 2006;42:284–91. [PubMed: 16646598]
35. Juang JM, Chern YR, Tsai CT, et al. The association of human connexin 40 genetic polymorphisms with atrial fibrillation. Int J Cardiol 2007;116:107–12. [PubMed: 16814413]
36. Shiels A, Mackay D, Ionides A, Berry V, Moore A, Bhattacharya S. A missense mutation in the human connexin50 gene (GJA8) underlies autosomal dominant “zonular pulverulent” cataract, on chromosome 1q. Am J Hum Genet 1998;62:526–32. [PubMed: 9497259]
37. Vanita V, Singh JR, Singh D, Varon R, Sperling K. A novel mutation in GJA8 associated with jellyfish-like cataract in a family of Indian origin. Mol Vis 2008;14:323–6. [PubMed: 18334946]
38. Ponnam SP, Ramesha K, Tejwani S, Ramamurthy B, Kannabiran C. Mutation of the gap junction protein alpha 8 (GJA8) gene causes autosomal recessive cataract. J Med Genet 2007;44(7):e85. [PubMed: 17601931]
39. Christiansen J, Dyck JD, Elyas BG, et al. Chromosome 1q21.1 contiguous gene deletion is associated with congenital heart disease. Circ Res 2004;94:1429–35. [PubMed: 15117819]
40. Cheroki C, Krepischi-Santos AC, Szuhai K, et al. Genomic imbalances associated with mullerian aplasia. J Med Genet 2008;45:228–32. [PubMed: 18039948]
41. Szatmari P, Paterson AD, Zwaigenbaum L, et al. Mapping autism risk loci using genetic linkage and chromosomal rearrangements. Nat Genet 2007;39:319–28. [PubMed: 17322880]
42. Turner DJ, Miretti M, Rajan D, et al. Germline rates of de novo meiotic deletions and duplications causing several genomic disorders. Nat Genet 2008;40:90–5. [PubMed: 18059269]
43. Bearden CE, Jawad AF, Lynch DR, et al. Effects of a functional COMT polymorphism on prefrontal cognitive function in patients with 22q11.2 deletion syndrome. Am J Psychiatry 2004;161:1700–2. [PubMed: 15337663]
44. Gothelf D, Eliez S, Thompson T, et al. COMT genotype predicts longitudinal cognitive decline and psychosis in 22q11.2 deletion syndrome. Nat Neurosci 2005;8:1500–2. [PubMed: 16234808]

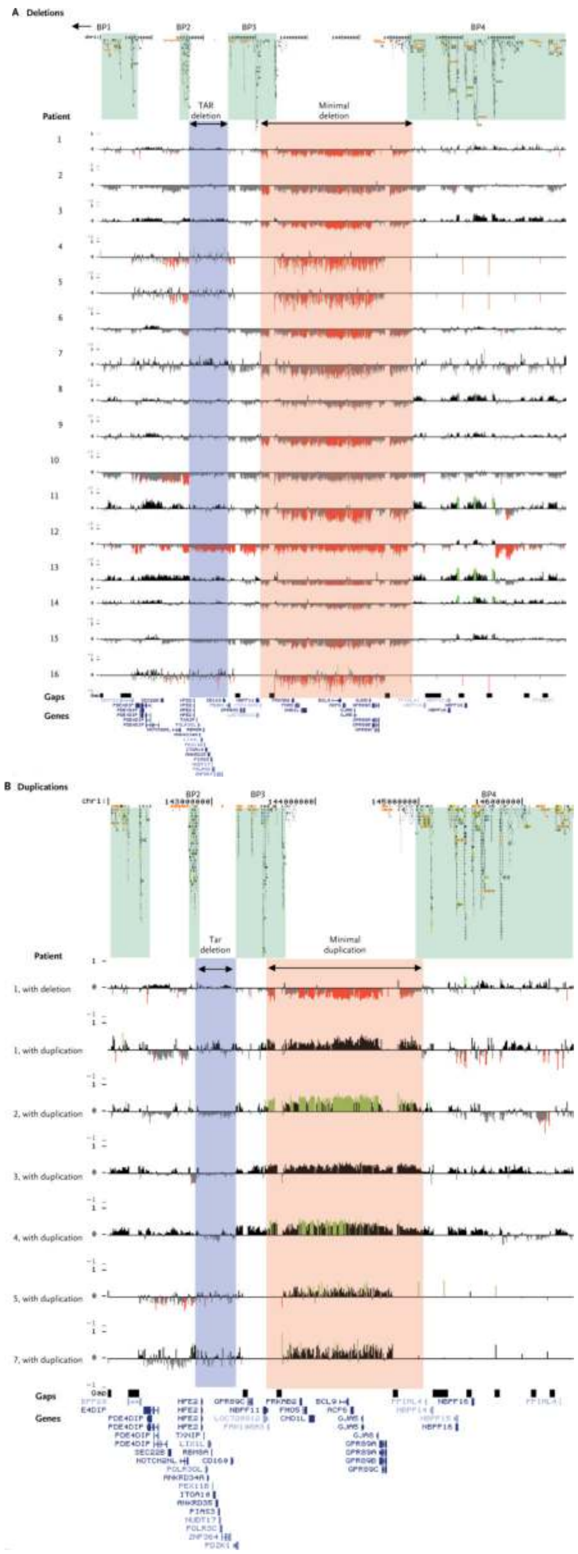

Figure 1. High-Density Oligonucleotide-Array Mapping of Chromosome 1q21.1 Rearrangements in the Study Patients

Sixteen 1q21.1 deletions (Panel A) and seven 1q21.1 duplications (Panel B) from patients without other chromosomal abnormalities were identified on chromosome 1q21.1. The region of minimal rearrangement is located from approximately 143,650,000 to 145,000,000 bp (pink shading) and contains two assembly gaps and eight genes in the National Center for Biotechnology Information Reference Sequence (RefSeq) collection. In Panel B, a patient with a microdeletion (Patient 1) is shown for comparison with the duplication carriers (Patients 1 through 7 shown). Segmental-duplication blocks are shown, with the approximate breakpoint (BP) regions indicated with green shading. The microdeletion associated with the thrombocytopenia-absent radius (TAR) syndrome[17] is shaded in blue. For each patient, deviations from 0 of probe $\log_2$ ratios are depicted by vertical bars, with those exceeding a threshold of 1.5 SD from the mean probe ratio shown in green or red to represent relative gains or losses, respectively; bars below this threshold are black (gains) or gray (losses). Segmental duplications of increasing similarity are also shown, as horizontal bars highlighted with green shading: 90 to 98% (gray bars), >98 to 99% (yellow bars), and >99% (orange bars). Results for Patients 17 through 20 with deletions and Patient 8 with a duplication are shown in Figure 3 in the Supplementary Appendix. Patient 21 with a deletion and Patient 6 with a duplication were evaluated only by means of the screening platform listed in Table 1A in the Supplementary Appendix, because of insufficient DNA for additional oligonucleotide-array analysis (data not shown).

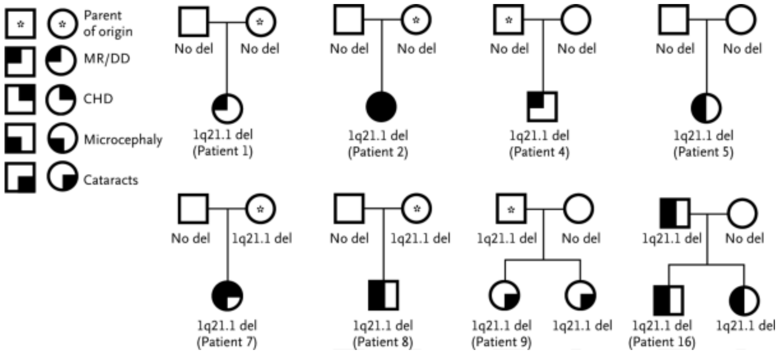

Parent of origin
MR/DD
CHD
Microcephaly
Cataracts
No del
No del
1q21.1 del (Patient 1)
No del
No del
1q21.1 del (Patient 2)
No del
No del
1q21.1 del (Patient 4)
No del
No del
1q21.1 del (Patient 5)
No del
1q21.1 del
1q21.1 del (Patient 7)
No del
1q21.1 del
1q21.1 del (Patient 8)
1q21.1 del
No del
1q21.1 del (Patient 9)
1q21.1 del
1q21.1 del
No del
1q21.1 del (Patient 16)
1q21.1 del

Figure 2. Pedigrees of Eight Probands with a 1q21.1 Deletion

Squares indicate males, and circles females. Additional phenotypic information is available in Table 1. CHD denotes coronary heart disease, DD developmental delay, and MR mental retardation.

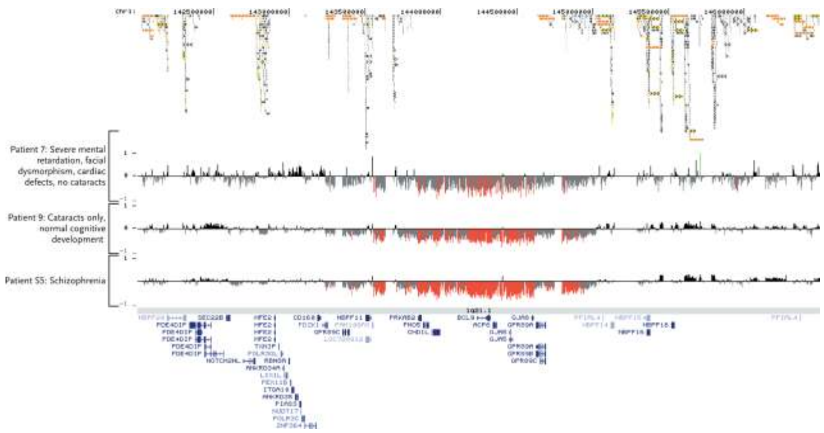

Figure 3. High-Density Oligonucleotide-Array Comparative Genomic Hybridization of Chromosome 1q21.1 Deletions in Three Study Patients

There were nearly identical breakpoints in the three patients, with the minimal 1.35-Mb deletion in chromosome 1 in the region of 142,000,000 to 146,500,000 bp (according to National Center for Biotechnology Information build 35). For each patient, deviations from 0 of probe $\log_2$ ratios are depicted by vertical bars, with those exceeding a threshold of 1.5 SD from the mean probe ratio shown in red to represent relative losses; bars below this threshold are black (gains) or gray (losses). Additional phenotypic information is available in Table 1 (for Patients 7 and 9) and in Table 4 in the Supplementary Appendix (available with the full text of this article at www.nejm.org) (for Patient S5).

Table 1

Phenotypic Features of Probands with a Deletion in Chromosome 1q21.1.*

Patient No.	Inheritance	Parental Origin	Cognitive Features	Growth Features	Facial Features	Skeletal Features	Features of Heart	Features of Eyes	Neurologic Features
1	De novo	M	Severe global delay, autism, self-harming behavior, stereotypy	Height, 3rd percentile for age; weight, 3rd percentile for age; in childhood, 25th percentile for age from adolescence (truncal obesity); OFC normal	Prominent nasal bridge, prominent columella, grimacing smile	Marked ligamentous laxity	Normal	Hypermetropia, convergent squint	Seizures, hypotonia, sensorineural deafness
2	De novo	M	Mild DD	Height, 25th–50th percentile for age; weight, 50th percentile for age; OFC, <0.4th percentile for age	Epicanthic folds, full lower lip, wide-spaced teeth	Single palmar crease in left hand	Patent ductus arteriosus (diagnosed at 4 yr of age)	Subtle nuclear pulverulent cataracts (diagnosed at 4 yr of age)	No seizures
3	De novo	M	Normal cognition, mild speech delay	At birth: Normal height, weight, OFC At 7.5 yr: Height, 3rd percentile for age; weight, <3rd percentile for age; OFC, <3rd percentile for age	Prominent nose with long columella, flat philtrum	Normal	Normal	Strabismus in left eye	Normal
4	De novo	P	Moderate MR	Height, 50th percentile for age; weight, >97th percentile for age; OFC, 50th–75th percentile for age	Brachycephaly, large and deep nasal bridge, thin lips, prognathism, short neck	Brachydactyly, single palmar crease in left hand, small feet	Normal	Hypermetropia in right eye	Seizures since 8 mo of age, hypotonia, deep sulci in cortex on brain MRI
5	De novo	Unknown	Mild MR	Height, 50th percentile for age; weight, >97th percentile for age; OFC, 10th percentile for age	Brachycephaly, large and deep nasal bridge, synophrys, long philtrum, thin lips, high palate, wide-spaced teeth, short neck	Mild joint hypermobility, short distal phalanges on 2nd, 4th, and 5th fingers	Normal	Normal	Mild hypotonia, slow waves over the anterior and central areas of both hemispheres on EEG
6	Inherited (mother with BIF; grandfather also carries deletion)	M	Mild MR (IQ 55)	Height, <3rd percentile for age; weight, <10th percentile for age; OFC, <3rd percentile for age	Brachycephaly, prominent ears, long columella, fine upper lip, pointed chin	Wide thumbs, duplicated left hallux	Normal	Normal	Normal
7	Inherited (mother normal)	M	Severe DD	At birth: Height and weight normal In childhood: Microcephaly	Fine features, triangular face; micrognathia, hypertelorism, low-set ears	Severe scoliosis, severe ligamentous laxity	Truncus arteriosus, multiple muscular VSDs of moderate size requiring early intervention	Microphthalmia, strabismus	Tonic–clonic seizures since 4 mo of age; absence seizures since 3 yr of age
8	Inherited (mother normal)	M	Mild global delay	Height, weight, and OFC all <0.4th percentile for age	Epicanthic folds, mild micrognathia, high palate, bifid uvula, turricephaly	Amputation deformity of left hand and foot; talipes of the right foot	Normal	Duane anomaly	Truncal hypotonia

Patient No.	Inheritance	Parental Origin	Cognitive Features	Growth Features	Facial Features	Skeletal Features	Features of Heart	Features of Eyes	Neurologic Features
9	Inherited (father with growth 2nd–9th percentile for age and no cataracts; affected sister carries same 1q21.1 deletion)	P	Normal	Growth measures, 9th percentile for age (sister's growth measures, 2nd–9th percentile for age)	Normal	Normal	Unknown	Bilateral congenital anterior sutural cataracts, dense congenital cataracts in sister	Unknown
10	Inherited (father mildly affected, with OFC <3rd percentile for age)	P	Mild MR (IQ, 65)	Height and OFC, <3rd percentile for age	Long columella, wide-spaced teeth	Broad thumbs, great toes, and fetal pads	Normal echocardiogram	Exophoria	Normal neurologic examination
11	Unknown	Unknown	Mild DD at 1 yr of age, resolved by 4 yr of age	OFC normal at 4 yr of age	Deep-set eyes, flat nasal bridge	Bilateral bifid great toes (required surgery)	Unknown	Unknown	Unknown
12	Unknown (son with speech delay)	Unknown	Mild MR (IQ, 59)	OFC, 80th–85th percentile for age	Round facies	Normal	Normal	Normal	Normal
13	Unknown	Unknown	Severe MR (IQ, 33)	Height, weight, and OFC all <3rd percentile for age	Micrognathia, full nose, fine lips, simple ears	Bilateral clinodactyly of 5th finger	Normal	Strabismus	Fine tremor, heel stomping, stereotypic behaviors
14	Unknown	Unknown	Developmental delay; ADHD	Failure to thrive, microcephaly	Prominent occiput, high palate, micrognathia	Unknown	Unknown	Unknown	Unknown
15	Inherited (father and brother with deletion both have OFC <3rd percentile for age, mild learning disability, and similar facies)	P	Mild MR; schoolwork 2 yr behind that for chronologic age	At birth: Weight, 10th–25th percentile for age	Prominent metopic suture, up-slanting palpebral fissures, thin upper lip, full lower lip	Normal	Normal echocardiogram	Normal	Normal brain CT
				At 8 yr: Height and weight, 0.4th percentile for age; OFC, <3rd percentile for age					
16[†]	Unknown	Unknown	BIF	Height, 75th–90th percentile for age, weight, 97th percentile for age	Up-slanting palpebral fissures, malar hypoplasia, arched palate, orthodontic correction	Joint laxity, pes planus	Bicuspid aortic valve, dilation of ascending aorta, aortic insufficiency	Cataracta complicata	Behavioral abnormalities
17	De novo	Unknown	Mild MR (IQ, 63) and ADHD	Height and OFC, <3rd percentile for age; weight, 50th percentile for age	Frontal balding, arched eyebrows, deeply set eyes, thin upper lip	Fingers with mild camptodactyly, mild inter-digital webbing	Aortic coarctation diagnosed at 1 wk of age, surgically repaired at 8 yr of age	Strabismus (surgical intervention at 2 yr of age)	Normal
18	Inherited (father normal)	P	Normal at 9 mo of age	Height, weight, and OFC all <3rd percentile for age	Hypotelorism, short palpebral fissures, low nasal bridge	Mesaxial Polydactyly of right foot	Normal	Normal	Normal
19	De novo	Unknown	Moderate MR, aggressive behavior	Height, 3rd–10th percentile for age; weight, 10th–25th percentile for age; OFC, 3rd–10th percentile for age	High, prominent forehead, long eyelashes, low nasal bridge, anteverted nares, small teeth	Overlapping toes	Patent ductus arteriosus	Normal	Unknown
20	Unknown	Unknown	DD, autistic features	Height, 25th–50th percentile for age; weight, 10th–25th	Normal	Bilateral mild clinodactyly of 5th finger, palmar and plantar	Normal	Normal	Normal

Patient No.	Inheritance	Parental Origin	Cognitive Features	Growth Features	Facial Features	Skeletal Features	Features of Heart	Features of Eyes	Neurologic Features
				percentile for age; OFC, 3rd percentile for age		erythema, single palmar crease in right hand, joint hypermobility, mild pectus excavatum			
21	Unknown	Unknown	Normal at 1 mo of age	At birth: Height, 25th percentile for age; weight and OFC, 50th percentile for age	Normal	Normal	Transposition of the great vessels, 6 mm ASD, 2 mm perimenbranous VSD, surgically repaired	Unknown	Normal brain ultrasonography

[*] ADHD denotes attention deficit–hyperactivity disorder, ASD autism spectrum disorder, BIF borderline intellectual function, CT computed tomography, DD developmental delay, EEG electroencephalography, M maternal, MR mental retardation, MRI magnetic resonance imaging, OFC occipitofrontal circumference, P paternal, and VSD ventricular septal defect.

[†] Because of Patient 16's marfanoid features, complete sequencing of the fibrillin 1 gene *FBN1* was performed; no mutations were detected.