International Journal of
Applied Mathematics,
Electronics and Computers
ISSN: 2147-8228 www.atscience.org/IJAMEC

Advanced Technology and Science

Original Research Paper

Remote Center of Motion (RCM) Mechanisms for Surgical Operations

Serhat Aksungur*[1], Tarkan Koca[2]

Accepted 15th August 2014

Abstract: Nowadays, surgical applications, entering the body through a small incision with laparoscopic procedures are performed and are expanding the use of robots for these operations. In existing systems, conventional robots are used for the body. Surgical procedure is carried out by a separate mechanism which is attached to the end of the robot and robot is used to positioning this mechanism. These mechanisms are called Remote Center of Motion (RCM) mechanism.In this paper, the literature on studies performed about the parallel, spherical and hybrid RCM mechanisms are examined and classified.

Keywords: *RCM mechanisms, Surgical robots, Parallel surgical mechanisms, Spherical surgical mechanisms, Hybrid surgical mechanisms.*

1. Introductıon

The purpose of the RCM mechanism, provide rotating around the incision point to prevent potential damage of the body tissue by the robot. Instruments enter through this incision point into the body with mechanical control and the robot works.

For reasons such as robots in the operation field covering many places, the difficulty of controlling and maintenance the robot, focuses on fixing the RCM mechanisms to working area and direct drive. For this purpose, two different mechanisms profile as a parallel and spherical are developed. In addition, the spherical mechanisms are designed in two different profiles as serial and parallel. In the aforementioned method, mechanism is fixing either end of a robotic arm or directly to the working zone. For this reason, it can be said RCM point's position is fixed. However, although body structure during operation assumed to be constant, as a result of very small movements happen resulting from the organism's liveliness, for precision surgical applications, researchers tend to develop mechanisms as RCM point moving. For this purpose, Hybrid (Serial-Parallel) mechanisms have emerged. In the hybrid mechanisms, working around the RCM point performed by the serial module, shift the RCM point is performed by the parallel module. In this way, requiring very small linear movement and host rotate around incision point such as eye operations, surgical success is increases.

2. Parallel RCM Mechanisms

As well known, if a link is connected by a revolute joint at its end, all points excluding the axis of the revolute joint in this link are rotated around the axis. In this case, any point on the axis can be considered as a RCM point.

This kind of RCM mechanisms is usually acted as a basic component of 2 degree of freedom (DOF) or multi-DOF RCM mechanisms because of its simple structure. The most familiar RCM mechanisms in applications are based on a parallelogram structure, which can easily compose 2-DOF RCM mechanisms. Fig. 1a-f shows a basic configuration of parallelogram-based RCM mechanisms. It is clearly shown that there exist redundant constraints in the EBCD loop. Thus by eliminating "E", "B", "C" and "D" redundant constraints, several other configurations can be derived, as shown sarpectively in Fig. 1b to 1e. In Fig. 1f, it is shown that "E" joint is completely removed. This kind of RCM mechanisms has many advantages such as a relatively large movement range, a simple structure, the driver placed at the base of linkage, and the adjustable position of RCM point by bending the links. On the contrary, the disadvantages of parallelogram-base RCM mechanisms are also obvious such as the intervention between linkages and singularity of parallelogram linkages, and lacking absolute rigidity due to a large number of revolute joints [1].

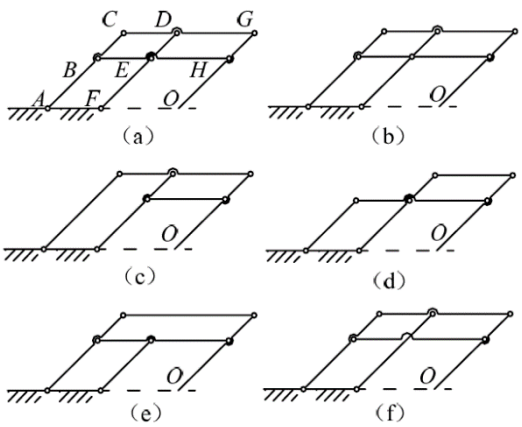

Fig. 1 Parallelogram-based RCM mechanisms

Design of a Force-Reflective Master Robot for Haptic Telesurgery Applications: RoboMaster1: In this study, Hadavand at al. studied on a double parallelogram robot called RoboMaster1. A main feature of the double parallelogram mechanism which looks attractive at the first glance is the fact that the center of rotation is

[1, 2] *Mechatronic Department, Arapgir Vocational School, Inonu University, 44800, Arapgir/Malatya/Turkey*
** Corresponding Author: Email: serhat.aksungur@inonu.edu.tr*
Note: This paper has been presented at the International Conference on Advanced Technology&Sciences (ICAT'14) held in Antalya (Turkey), August 12-15, 2014.

located at a tunable distance from the body of the mechanism. So, this mechanism can be efficiently transfer the remote center of rotation to the back of surgeon's hand without limiting surgeon's maneuvers. For having a stable RCM mechanism, they added another double parallelogram to the mechanism with some offset from the first one as is illustrated in Fig. 2. In this mechanism when the first parallelogram reaches the vertical position, the other one would be in vertical position, and it prevents losing the RCM motion. Thus, proposed RCM mechanism can transfer the center of rotation behind the surgeon's hand to induce sense of hand inside the patient's body, while it can produce and control linear motion at the base of the robot [2].

Fig. 2 RoboMaster1

Development of a Novel Mechanism for Minimally Invasive Surgery: In this paper, a novel robotic system that can asist minimally invasive surgery is proposed by Wang at al. The system has two subsystems: a 3-DOF arm part and 4-DOF instruments. The arm part has a new remote center-of-motion mechanism, while the 4-dof instruments with the diameter 8mm can increase the dexterity during the surgery. The structure of the double parallelogram is simple, and it can fulfill the requirements of the incision point constraints without extra degree of freedom. So it is adopted in many MIS robot systems as the arm part. The double parallelogram mechanism is shown in Fig. 3, it is consisted of one translation joint T and two revolute joints R_1 and R_2. Other DOF needed in MIS can be integrated on the muti-DOF instruments. P is the incision point [3].

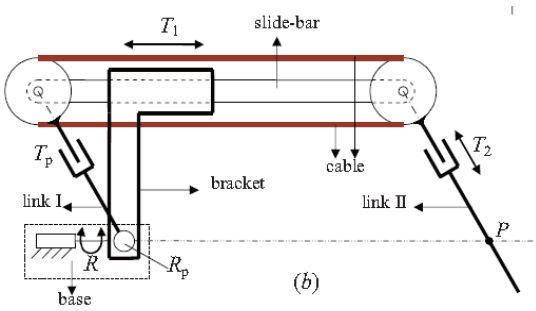

Fig. 3 Mechanism for MIS robot

3. Spherical RCM Mechanisms

3.1. Spherical Serial RCM Mechanisms

1) Promis: Laribi at al. work on developing a compact system for robot-assisted surgery. A PROMIS (Prime RObot for Minimally Invasive Surgery) system is designed for collaborative operation between the surgeon and the robot.

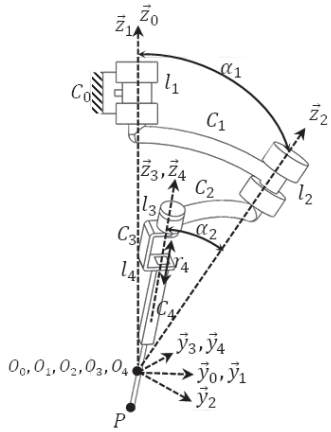

Fig. 4 PROMIS RCM mechanism

The work presented is devoted to the slave side of the teleoperation system. The aim of this work is to propose a simple architecture that will reduce the size, weight, complexity and costs of the tele-operated robotic surgery system. They seek to simplify and reduce the setup and maintenance procedures required to use the system.

The mechanism under study is member of a class of spherical mechanism in which all the links rotation axes intersect at a single point located at the center of the mechanism which shown in Fig. 4. The pivot point makes the spherical mechanism a natural candidate. Aligning this point with the location of the incision through which tools are inserted into the body in MIS eliminates any tool translation along the orthogonal axes of the tools shaft that are inherently imposed by the presence of the trocar. The center of the sphere is the origin for all reference frames of the mechanism. Thus, each frame is a pure rotation from one to the next.

According to the surgical motions analysis, a compact 4-DOF spherical robot has been designed and manufactured with its control and power portable unit. The design challenge is to transform the movement of the surgeons hand through a long small diameter trocar creating one or more output functions at the distal tip inside the body cavity [4].

2) Cures: This paper presents a newly developed compact surgical robot, CURES, which stands for Compact Unit for Robotic Endoscopic Surgery. This robot can generate 5-DOF, including grasping motion and makes use of a spherical mechanism (Fig. 5). The minimal DOF for a straight cylinder-type instrument is 4-DOF for rotational and translational motion and 1-DOF for grasping. Extended dexterous workspace (EDWS) is used as the requirement of the workspace. The vertex angle in the lateral/medial direction is 90° and the vertex angle in the superior/inferior (foot/head) direction is 60°. The manipulator should be designed to enclose this workspace. Simultaneously, the manipulator size should be minimized not to interfere with the other robots or the patient's body. In EDWS, the manipulator can reach the full extent of the human abdomen without re-orientation.

Fig. 5 Overall figure of the 5-DOF spherical mechanism surgical robot, CURES

Spherical mechanism optimization for a larger workspace was conducted, and the maximum torque in the workspace was simulated using the preliminary robot prototype. By minimizing the wire-driven mechanism and mounting the motors directly at the joint, the overall robot size and weight were reduced significantly [5].

3) Raven II: The Raven-II is a platform for collaborative research on advances in surgical robotics. Seven universities have begun research using this platform. The Raven-II system has two 3- DOF spherical positioning mechanisms capable of attaching interchangeable four DOF instruments. The Raven-II software is based on open standards such as Linux and ROS to maximally facilitate software development. The mechanism is robust enough for repeated experiments and animal surgery experiments, but is not engineered to sufficient safety standards for human use.

The motor chassis (base) is the most extensively portion of the Raven-II. There were two goals in this design, *first* to simplify the geometry, cable runs, and cable tension adjustments and *second* was to narrow the base so that two Raven-IIs could be mounted on either side of the surgery site, allowing for a total of up to four Raven-II arms to be applied to a single surgical field (Fig. 6).

Fig. 6 Raven-II robot

The motors for axes 2–7 are arranged in a line. The Raven-II tool interface is designed to facilitate research on new instrument and system designs. The interface consists of four spindles in a diamond shape configuration, each perpendicular to the long tool axis. A single spring-loaded release tab frees the tool from the interface. The Raven-II system includes one removable tool, a grasper. The grasper (see Fig. 7) has 4-DOF (wrist roll, wrist yaw, and finger pitch times two fingers).

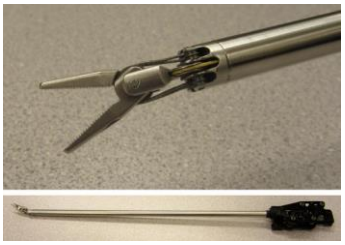

Fig. 7 Raven-II instrument wrist

Link frames for the positioning joints (Axes 1–3) are related to the motion center and are shown in Fig. 8. There are differences between the left and right arm geometries and link frames are assigned slightly differently in left versus right arm. In the following figure, La_{12} and La_{23} are the angles of the fixed mechanism links.

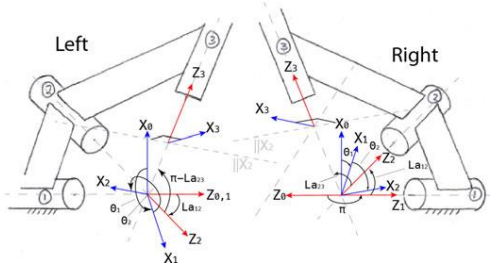

Fig. 8 Frame assignments for Frames 0, 1, 2, and 3

Instrument joints: Link frames for the Raven-II grasper wrist (Axes 4–6) are the same for left and right instrument, since the instruments are identical (Fig. 9). In Fig. 9, the instrument is shown from the top as if resting on a table with the spindles down and viewed from above [6].

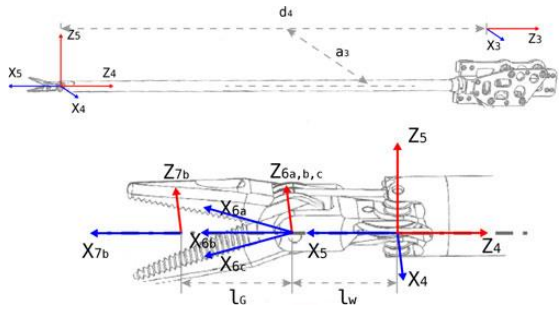

Fig. 9 Frame assignments for Frames 4, 5 and 6

4)Curved RCM Arm: Disclosed is a linkage structure for a surgical robot arm. Ther linkage structure for a surgical robot arm comprises a robot arm, a first linkage unit forming an axis combination with a fore-end of the robot arm through a first axis, a second linkage unit forming an axis combination with the first linkage unit through a second axis and an intrument forming an axis combination with the second linkage unit through the third axis, the first, second and third axes being formed such that extended lines of the three axes are concentrated on a predetermined point of a fore-end of the instrument. An active type RCM of robot arm according to the present invention allows a fore-end of an instrument to freely pivot around an incision point of the instrument without injuring tissues and to perform precise spherical motion. Also, the present invention provides a compact size robot arm by forming an RCM with two overlappable linkage units. Since fewer parts are required for forming the RCM, failure rate may decrease [8].

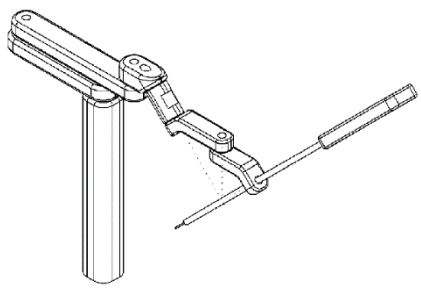

Fig. 10 Curved RCM robot arm

5)Basic Spherical Mechanism: In this study, adjustable aluminum mock-ups were fabricated to physically model the kinematics of the mechanisms being studied. The mock-ups were designed with adjustable link angles and an inner radius of 10 cm with the ability to be configured as parallel or serial manipulators (Fig. 11). A special sleeve located at the "end-effector" of the mechanism

allows MIS tools to be inserted through the joint in a way that mimics the tools of a surgical robot. This setup allows the surgeon to utilize the tools in the same manner as in MIS while passively moving the mechanisms and assessing range of motion, self-collisions, robot-robot collisions and robot-patient collisions. Self-collision was of primary concern with the parallel mechanisms; the two elbows (joints 3 and 4) were subject to collision thereby limiting the workspace. Robot-robot collisions were of concern because while each mechanism would be optimized separately, two or more manipulators will be present in the surgical scene. Robot-patient collisions are unacceptable for obvious safety reasons.

The first evaluations were performed on a training torso (Simulab, Seattle, WA) whereby the design candidate was moved through its entire range of motion. Collision problems for each candidate were assessed. Based on these initial results, surgeons selected the best candidates and in-vivo suturing and tissue manipulation tasks were performed on an animal through the mechanism (Fig. 11c). This experimental protocol was performed to verify that the mechanism would have sufficient range of motion without collision problems. Different combinations of serial and parallel mechanisms with varying link angles were tested on an anthropomorphic human plastic torso. The fewest collision problems were encountered with both mechanisms in serial configurations [9].

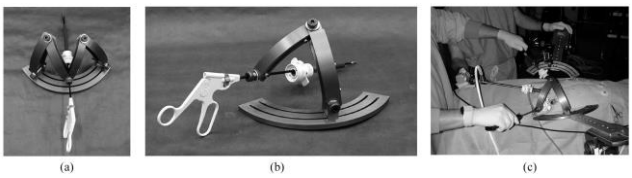

Fig. 11 Aluminum mock-up with adjustable link length and base length. (a) Parallel, (b) serial, (c) two serial configurations

6)Double Ring RCM Mechanism: Based on the design requirements identified from the current clinical environment and literature, Song at al. designed an MRI-compatible robotic needle insertion device for MRI-guided liver interventions using a double ring RCM mechanism to deliver needle insertion via single skin entry. They also developed a 3D Slicer module that provides planning and navigation.

The developed manual device consists of two active rings. The lower larger ring is on the base and the other smaller ring is located onto the larger ring in 20 degree slanted angle. This unique structure enables the needle to pivot on a RCM at the center of lower surface of the base. (Fig. 12). Therefore, once a target position is identified, the needle path can be calculated and provided by rotating the base ring and the tilted ring accordingly, which is calculated by the navigation software.

Regarding the in-bore space limitation, the height of the device is approximately 8 cm. With an average size of patients' chest thickness, the device structure with a partially inserted needle would not exceed the internal diameter of the 70 cm diameter closed bore. With the skin-attached design, patient's respiratory motions could be, in part, cancelled out, since the robot and chest move simultaneously [10].

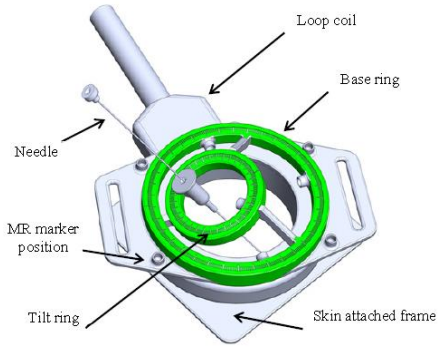

Fig. 12 Proof of concept model

3.2. Spherical Parallel RCM Mechanisms

1)The Spherical Laparoscope Holding Robot: This system brings the competition up a notch by making the robot smaller and more compact with a more advanced mechanism. The spherical parallel laparoscope holding robot shown in Fig. 13. Its most special feature is that all three branches move on the surface of a virtual sphere. In other words, the rotation center is located at the incision point, where all of the rotational axes coincide. When the incision point is matched to the center of the virtual sphere, the laparoscope could rotate about that point without damaging the incision hole. Another special feature of this robot is that all three drive shafts are constructed into a single drive shaft, and the driving motors can be placed far away from the incision hole.

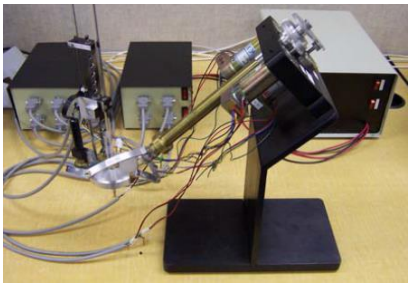

Fig. 13 The spherical laparoscope holding robot and its control module

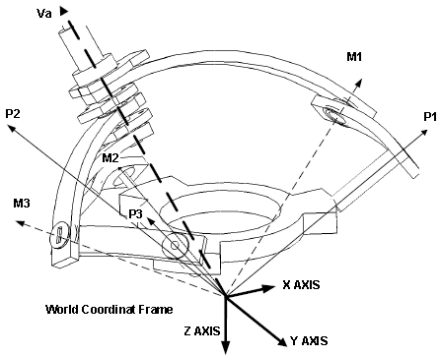

Fig. 14 The schematics drawing of the spherical robot platform

In this case, given the 3D coordinates of the tip of the surgical tool, the angles calculated for each of the three branches (driven gear angles) of the robot to turn to position the laparoscope such that the surgical tool is within the view. With a given coordinates (x, y, z) for the laparoscope to reach, the three actuating angle θi's are found through the inverse kinematics of the robot [11].

2)Small Spherical Wrist: Sabater at al. studied on the concept, analysis and first simulations of a small size prototype, based on a parallel kinematic architecture and with a great stiffness and dynamic capacity designed like a guidance device of laparoscopic surgery tools.

The solution presented on this paper uses a parallel platform with kinematic architecture 3UPS1S and small dimensions. The device is able to give orientation to the MIS surgical tool, thanks to the three degrees of freedom it has. Additionally, a device that allows a translational degree of freedom along the axis of the tool is foreseen. The goal of the given solution is to design a robot whose workspace fits as much as possible to the objective workspace (the cone of laparoscopic procedures), without internal singularities and that is capable to give the required forces.

The 3UPS1S platform (Fig. 15) is composed of three legs, where each leg has three joints: an spherical joint that links the lower platform with the leg, a prismatic joint that is used by the actuator, and an universal joint that links the upper platform with the leg. As the figure 4 shows, the 3UPS1S proposed here has the special feature that its rotation point P is located over the 1S joint, in the lower platform of the device, and that is coincident with the insertion point of the surgical procedure. This feature allows to fit the P point over the trocar, in such a way the the rotations of the MIS tool are always safe.

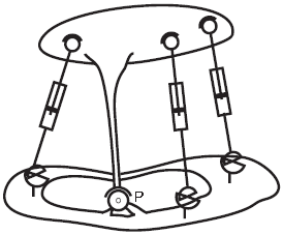

Fig. 15 3UPS1S Wrist Mechanism

Design of the proposed platform has seen in Fig. 16, in order to avoid the auto-collitions and to evaluate the obtained workspace. The lower ball-and socket joint was consists on three concentric semispherical parts. The lower part is used as base and the other two part are fixed over it. The intermediate part is joined to a methacrylate tube and it has constrained the translational motion by the other two parts of the spherical joint. The upper semisphere completes the joint. Over this joint three universal joints are located, separated 120° among them. These universal joints are added with an additional degree of freedom given by the rotation of the linear motor over its own displacement rod; this occurs that the universal joints are in fact spherical joints with three degrees of freedom. Over each one of these joints, a primatic one (the linear motor) is located. At the own core of the linear motor the upper universal joint is located. The three joints of the three legs are located over an upper platform that is also fixed to the methacrylate tube that starts at lower ball-and-socket joint [12].

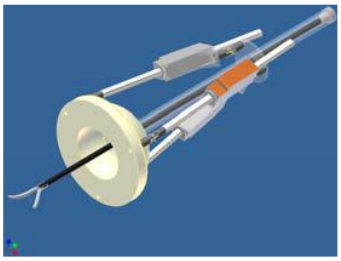

Fig. 16 CAD view of the 3UPS1S platform

3)SASSU and SASI: This contribution reports the development of a novel robotic manipulator for stereotactic surgery on small animals, the Spherical Assistant for Stereotactic Surgery (SASSU). Within usual placements of probes in small animal's brains, no rotation around the probes longitudinal axis is required. Thus, placement at specified locations in the rat brain requires 5-DOF (3 translational and 2 rotational DOF). Additionally, the probe has to be advanced on a straight path within the cranium to minimize damage to brain areas and avoid blood vessels. These constraints require the last axis to be a translational axis. The desired orientation of the probe must therefore be achieved outside the brain. This establishes a consecutive approach,

i) Prepositioning step; based on the desired placement position and the desired path, the probe is translated and orientated such that the longitudinal axis of the probe points along the desired entry path.

ii) Penetration step: After prepositioning, the probe is advanced along the direction of its longitudinal axis with a desired speed until the desired position within the brain is reached. This guarantees a straight path of penetration.

As the penetration step requires one DOF (translation) the prepositioning of the probe has to provide the additional four. Taking into account these kinematic requirements, the design of the manipulator is chosen based on the existing design of stereotactic frames in human applications. The two rotational DOF are provided by a rotating arc on which a slide carrying the final translational stage, the probe adapter and the probe itself. The probe adapter and the probe will be referred to as probe-adapter configuration in the following. The arc is mounted on two linear stages. Fig. 17 shows the final design of the system. The arc and the rotating slide are designed such that the last translational stage, the probe, and additional equipment such as preamplifiers can be rotated with high accuracy. The two linear stages located on the base of the arc and the two rotational stages provide the 4 DOF for the prepositioning step outside the skull. The last linear stage then advances the probe into the cranium of the rat.

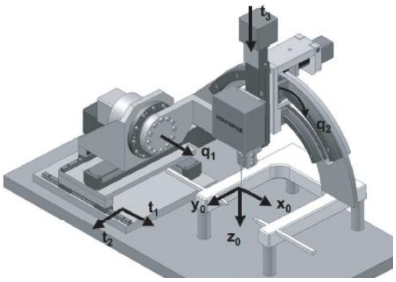

Fig. 17 SASSU and base coordinate system

The small animal stereotactic instrument SASI presents an existing stereotactic manipulator for precise stereotactic procedures on small animals. Fig. 18 shows the kinematic structure of the setup. The major kinematic difference is that in the SASI system all translational joints kinematically follow the rotational joints. Like the SASSU configuration, the SASI manipulator corresponds to a spherical structure with three prismatic and two rotary joints but the sequence of joints is different to the SASSU system [13].

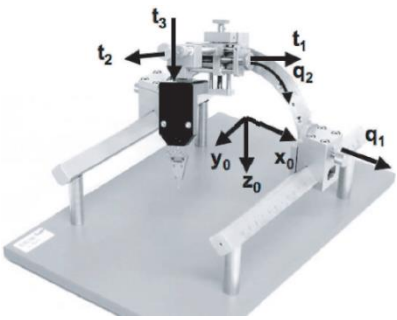

Fig. 18 SASI and base coordinate system

4)Accurate Linked Mechanism: Yousef and Aiash studied on designed a compact mechanism to enable manipulation about a

pivot point, different kinds of surgical tools which are commonly used in minimally invasive surgery such as therapy laser delivery tools, biopsy and bracytherapy needles. The robot's special configuration will enable it to reorient a surgical tool about a pivot point conveniently; achieve and control small-scale movement for precision manipulation in two independent degrees of freedom, and allow for miniaturization so it can overcome problems associated with the limited surgical workspaces. The manipulator can be used in manual, autonomous or remote-control modes.

The robot comprises two arcuate links as shown in Fig. 19 and a sliding block that is used as a tool adapter. The tool is inserted to pass through the sliding block. Each arcuate link consists of double-curved guidance rods parallel to each other. The block has curved guidance holes to allow the arcuate links to pass through it. This allows the tool adapter block to slide along the guidance shafts, and will prevent the block from spinning about the guidance shafts. When the block slides along the arcuate link, the tool rotates about the pivot point which is located at the center of the curvature of the arcuate link. This allows to manipulate and reorient the tool in one DoF about the pivot point where the rotation takes place in the plane that contains the arc of the link.

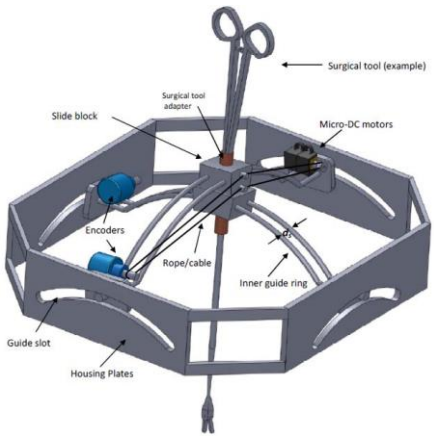

Fig. 19 The proposed robot with a surgical tool

The second arcuate link is similar in structure to the first link and is chosen to have a smaller radius than that of the first link, with the plane of its curvature perpendicular to that of the first link. Again, the center of the curve is located at the same pivot point of the first link. Similar to the first link, this link will also pass through the sliding block. When the block slides along the second link, it will manipulate the tool's orientation in one DoF perpendicular to the first link's Dof. In this architecture, the two arcuate links will enforce the block, that hosts the surgical tool to move only on the surface of a hemisphere that has it's center kept at the required pivot point. The center is defined by the concentric links radii. For each arcuate link, the separation distance ds between the parallel curved shafts will define the max dimension of the tool's cross section or thickness.

Moreover, as shown in Fig. 20, the robot dimensions H_1 and D_1 can be controlled by changing the radii of the curved links and the desired angular range of surgical tool manipulation. Hence the smaller the angular range is, the smaller the mechanism dimensions will be. Fig. 20 shows also that the location of the remote center of motion can be moved away from the mechanism's links and components by altering the radii of the curved links [14].

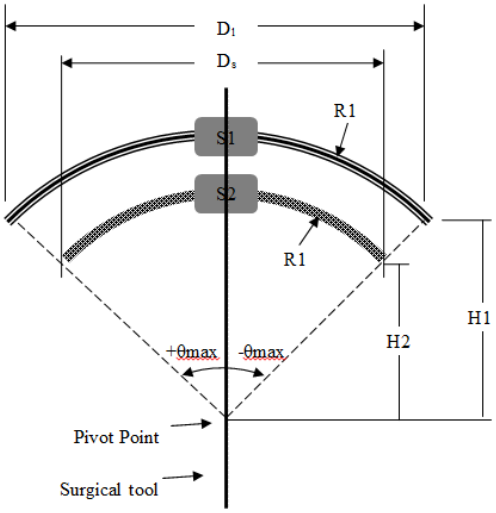

Fig. 20 Ease of re-dimension the mechanism

4. Hybrid RCM Mechanisms

1) Eye Robot: In this work, a robot comprising prismatic piezo actuators was designed and developed. The kinematics consists of foursegments; two parallel coupled joint elements, one prismatic and one optional revolute joint in the end effector which collectively enables 6-dof tool motion. One novel contribution of this work is a parallel coupled joint mechanism.

In this mechanism the differential displacement of two translational motions is converted to one translation and one rotation (Fig. 21). It should be noted that L1 and L2 are linear displacements of each prismatic joint with the distance d from each other. L and θ are linear and angular displacements of the mechanism, dm is the length of the end effector and L_{Tool} is the length of the tool, from gripper to tool tip. Any physical and virtual point that is in angular reach of the system can be defined as the pivoting point of the end effector or attached tool. This point can be changed or moved during motion. Definition of the desired RCM point is possible by this setup. It allows the surgeon to define and even move the pivoting point of the tool during the manipulation [15].

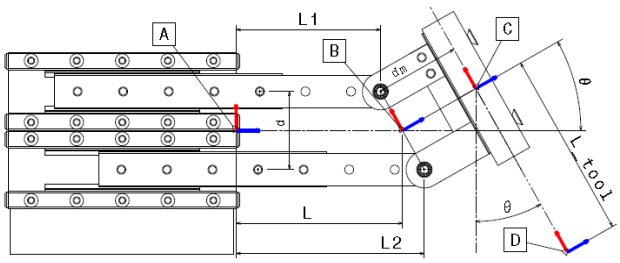

Fig. 21 Parallel Coupled Joint Mechanism (PCJM)

2)Eye Robot 2 (ER2): In this study, Üneri at al. present the design of a new generation, cooperatively controlled microsurgery robot with a (RCM) mechanism and an integrated custom micro-force sensing surgical hook. Eye Robot 2 (ER2) is an intermediate design towards a stable and fully capable microsurgery research platform for the evaluation and development of robot-assisted microsurgical procedures and devices (Fig. 22). A parallel six-bar mechanism has implemented (Fig. 23) that mechanically provides the isocentric motion, which minimizes the translation of XYZ stages. The resulting robot manipulator consists of four subassemblies [16]:

a) XYZ linear stages for translation;

b) a rotary stage for rolling
c) a tilting mechanism with a mechanical RCM and
d) a tool adaptor with a handle force sensor.

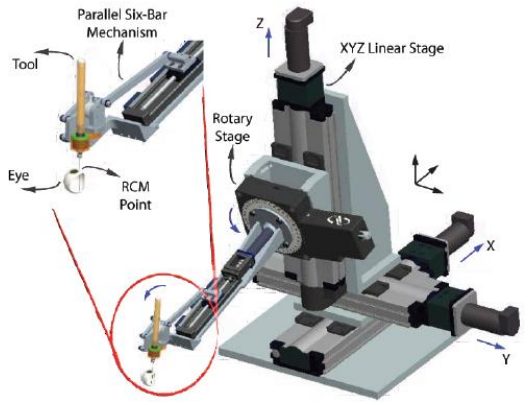

Fig. 22 ER2 robot and close up view of its end effector

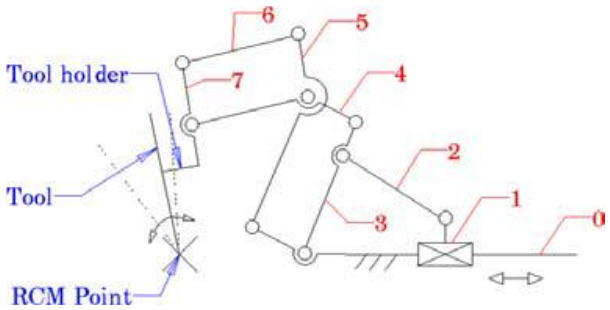

Fig. 23 Tilting mechanisms ER2 (Parallel six-bar)

Ophthalmic surgery is a discipline within the medical domain that immensely depends on the skills and experiences of the surgeons. The tremor of the surgeon's hand has to be as minimal as possible. The current problem is that there is no satisfying cure for these ophthalmic maladies, such as retinal vascular occlusion, which is based on a clot that is formed in one of the retinal arteries or veins, having a cross sectional diameter of 80µm. However, the surgeon's movement skills are not sufficient enough to perform tasks such as locating the tools and especially holding it for at least 30 seconds, since the tremor of the surgeon's hand is already in the range of 108 µm.

5. Conclusions

In the hybrid mechanism, working around the RCM point carried out by parallel modules, shift of RCM point is carried out by the serial module. Thus, success of surgical operations is increasing, require very little mechanism movements and containing incision point moving as in eye operations.

Table 1. Types and degrees of freedom of mechanics

Mechanism	DOF	Type
RoboMaster1	4	Parallel
Mis robot	4	Parallel
Promis	4	Spherical Serial
Cures	5	Spherical Serial
Raven II	3	Spherical Serial
Curved RCM arm	7	Spherical Serial
Basic spherical mechanism	4	Spherical Serial
Double ring RCM mechanism	6	Spherical Serial
Laparoscope holding robot	5	Spherical Parallel
Small spherical wrist	4	Spherical Parallel
SASSU and SASI	5	Spherical Parallel
Accurate linked mechanism	3	Spherical Parallel
Eye robot 2 (ER2)	6	Hybrid
Eye robot	6	Hybrid

As seen in the table above, degrees of freedom of hybrid mechanisms are more than the others. As a result of increase the number of degrees of freedom, ability of the mobility is increased. As a result, downsizing the RCM mechanisms and independence from the master robot was observed. If the mechanism used alone in operation, RCM point should be moving. In the future, it is expected to be that RCM mechanisms intended as hybrids (parallel and serial parts in same mechanism) to move this RCM point.

Acknowledgment

We owe a debt of thanks to Selcuk University.

References

[1] P. Xu, Y. Jingjun, and B. S. Z. Guanghua, "Enumeration and Type Synthesis of One-DOF Remote-Center-of-Motion Mechanisms," in 12th IFToMM World Congress, , 2007, p.1-6.

[2] M. Hadavand, A. Mirbagheri, H. Salarieh, and F. Farahmand, "Design of a Force-Reflective Master Robot for Haptic Telesurgery Applications: RoboMaster1" in 33rd Annual International Conference, 2011, p. 7037-7040.

[3] J. Li, S. Wang, X. Wang, C. He, and L. Zhang, "Development of a Novel Mechanism for Minimally Invasive Surgery", in International Conference on Robotics and Biomimetics, 2010, p. 1370-1375.

[4] M. A. Laribi, T. Riviere, M. Arsicault, and S. Zeghloul, "A design of slave surgical robot based on motion capture" in International Conference on Robotics and Biomimetics, 2012, p. 600-605.

[5] S-K. Kim, W-H. Shin, S-Y. Ko, J. Kim, and D-S. Kwon, "Design of a Compact 5-DOF Surgical Robot of a Spherical Mechanism: CURES", in International Conference on Advanced Intelligent Mechatronics, 2008, p. 990-995.

[6] B. Hannaford, J. Rosen, D. W. Friedman, H. King, P. Roan, L. Cheng, D. Glozman, J. Ma, S. N. Kosari, and L. White, "Raven-II: An Open Platform for Surgical Robotics Research" ;

[7] IEEE Transactions On Biomedical Engıneering, Vol. 60, No. 4, pp. 954-959, April 2013.

[8] J. S. Won, S. W. Choi, and W. Peine, "Curved RCM of Surgical Robot Arm", Patent WO 2009/104853 A1, Aug. 27,2009.

[9] M. J. H. Lum, J. Rosen, M. N. Sinanan, and B. Hannaford, "Optimization of a Spherical Mechanism for a Minimally Invasive Surgical Robot: Theoretical and Experimental Approaches" IEEE Transactions On Biomedical Engıneering, Vol. 53, No. 7, pp. 1440-1445, July 2006.

[10] S-E. Song, J. Tokuda, K. Tuncali, A. Yamada, M. Torabi, and N. Hata, "Design Evaluation of a Double Ring RCM Mechanism for Robotic Needle Guidance in MRI-guided Liver Interventions", in International Conference on Intelligent Robots and Systems (IROS), 2013, p.4078-4083.

[11] J. K. Hsu, T. Li, and S. Payandeh, "On Integration of a Novel Minimally Invasive Surgery Robotic System", IEEE, 2005, p. 437-444.

[12] J. M. Sabater, N. Garcia, C. Perez, L. M. Lopez, and F. J. Badesa, "A new spherical wrist for minimally invasive

robotic surgery", in ISR / Robotik, 2010, p. 1026-1031.
[13] L. Ramrath, U. G. Hofmann, A. Schweikard, "Spherical Assistant for Stereotactic Surgery" in International Conference on Intelligent Robots and Systems, 2007, p. 859-864.
[14] B. F. Yousef, and F. M. T. Aiash, "A Mechanism for Surgical Tool Manipulation", IEEE, 2013.
[15] M. A. Nasseri, M. Eder, D. Eberts, S. Nair, M. Maier, D. Zapp, C. P. Lohmann, and A. Knoll, "Kinematics and Dynamics Analysis of a Hybrid Parallel-Serial Micromanipulator Designed for Biomedical Applications", in IEEE/ASME International Conference on Advanced Intelligent Mechatronics (AIM), 2013, p.293-299.
[16] A. Üneri, M. A. Balicki, J. Handa, P. Gehlbach, R. H. Taylor, and I. Iordachita, "New Steady-Hand Eye Robot with Micro-Force Sensing for Vitreoretinal Surgery", in 3rd IEEE RAS & EMBS International Conference on Biomedical Robotics and Biomechatronics, 2010, p.814-819.