THE SOLID ROCKET BOOSTER AUXILIARY POWER UNIT — MEETING THE CHALLENGE

Robert W. Hughes
Structures and Propulsion Laboratory
Marshall Space Flight Center, Alabama

ABSTRACT

The thrust vector control systems of the solid rocket boosters are turbine-powered, electrically controlled hydraulic systems which function through hydraulic actuators to gimbal the nozzles of the solid rocket boosters and provide vehicle steering for the Space Shuttle. Turbine power for the thrust vector control systems is provided through hydrazine fueled auxiliary power units which drive the hydraulic pumps.

The solid rocket booster auxiliary power unit resulted from trade studies which indicated significant advantages would result if an existing engine could be found to meet the program goal of 20 missions reusability and adapted to meet the seawater environments associated with ocean landings. During its maturation, the auxiliary power unit underwent many design iterations and provided its flight worthiness through full qualification programs both as a component and as part of the thrust vector control system. More significant, the auxiliary power unit has successfully completed six Shuttle missions.

THE SOLID ROCKET BOOSTER CHALLENGE

The challenge associated with the development of the Solid Rocket Booster (SRB) Auxiliary Power Unit (APU) was to develop a low cost reusable APU, compatible with an "operational" SRB. This challenge, as conceived, was to be one of adaptation more than innovation. As it turned out, the SRB APU development had elements of both.

During the technical trade studies to select a SRB thrust vector control (TVC) system, several alternatives for providing hydraulic power were evaluated. A key factor in the choice of the final TVC system was the Orbiter APU development program, then in progress at Sundstrand Aviation. This program was implemented under contract with Rockwell International Corporation and Johnson Space Center. The Orbiter APU design requirements very closely approximated or exceeded the ascent phase performance needed by the SRB and was physically compatible with the SRB concept[1] (Table I). Because of this comparability in requirements and physical compatibility, the Orbiter APU was selected as the basic power element for the SRB. With this selection came the expectation of reduced development costs and early hardware availability.

This paper deals with the challenge in adaptation of the Orbiter APU to meet the SRB need.

TABLE I. APU OPERATIONAL REQUIREMENTS

PARAMETER	ORBITER	SRB
Horsepower Shaft (HP)	135/151	135/148
Operation/Mission (Min)	82	2.4
Missions (Min)	40	20
Total Operating Time (Hr)	50	2
Useful Life (Hr)	250	10
Cold Gas Checkout	No	Yes
All Attitude Operation	Yes	No
Zero G Operation	Yes	No
Redundant Control	Yes	Yes

SRB AND ORBITER

Although the Orbiter APU is used as the basic power element for the SRB APU and both fly on the same Shuttle vehicle, the APUs are, in fact, quite different. These differences range from the obvious to the barely detectable and are the factors which make the SRB APU of interest.

In order to understand the development challenge of the SRB APU it helps to have a basic understanding of the differences between the Orbiter and the SRB missions and the environments these missions induce (Fig. 1).

The Orbiter mission requires the APUs to be functional during all phases of operation (Table II). Orbiter APUs start about 5 min prior to lift-off and operate continuously throughout ascent into Orbital insertion before they are shutdown. In preparation for de-orbit and reentry the APUs are restarted and operate throughout atmospheric maneuvering to a runway landing. Total APU operating time for each Orbiter APU is about 82 min.

In comparison, the SRB APUs are started approximately 25 sec before lift-off and function only during the ascent phase of the mission terminating at SRB separation 161 sec later (Table II). From separation at approximately 200,000 ft altitude, the remaining 6 min of the SRB flight mission consisting of atmospheric reentry, parachute slowed descent, and ocean splashdown are performed with nonfunctional APUs. Once in the water, the SRB mission becomes one of survival. From SRB splashdown at 91 ft/sec to SRB removal from the ocean at dockside, the APUs are subjected to various combinations of seawater immersions and water pressures for 7 days during SRB recovery and retrieval.

Complicating the SRB APU situation is its installation. Where the Orbiter APU is installed in an aircraft type compartment offering protection from aerodynamic, vibration, and thermal extremes, during all phases of operation, the SRB APU is located in the aft skirt section of the SRB next to the engine where protection is available only during ascent (Fig. 2).

Figure 1. SRB Mission Sequence.

TABLE II. APU MISSION COMPARISON — SRB VERSUS ORBITER

APU OPERATION	ORBITER	SRB
PRELAUNCH	YES	YES
BOOST	YES	YES
ORBITAL	YES	NO
REENTRY	YES	NO
LANDING	YES	NO
POSTLANDING	YES	NO
TOTAL TIME	4200 Seconds	161 Seconds

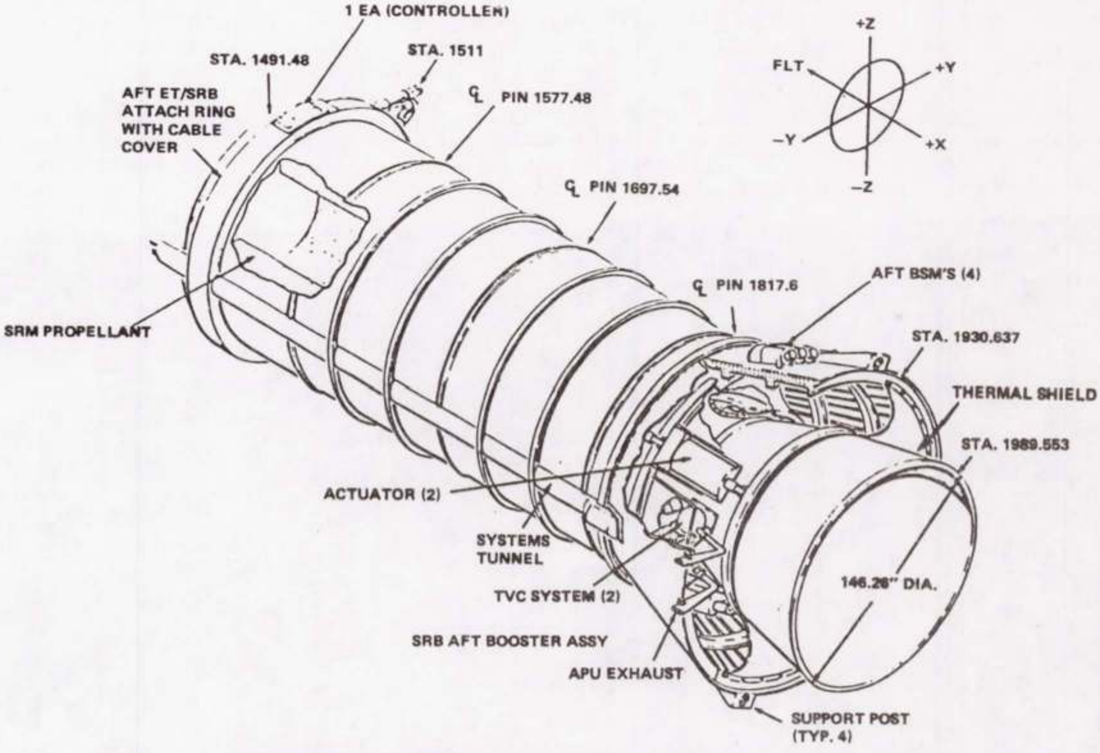

Figure 2. SRB TVC Subsystem and Actuators.

Table III shows the major environmental differences between the SRB and the Orbiter APUs. The main differences were in the vibration and landing loads, and in the seawater pressures and immersions. It was obvious the Orbiter APU was not designed for the SRB severe conditions, and modifications would be necessary. The majority of the SRB APU developmental effort was expended in these areas.

In this developmental phase of the SRB program, the decision to use the Orbiter APU proved most valuable since test hardware for modification became available without long lead times.

Modifications made to create the SRB APU may be categorized in four basic ways:

a. Elimination of unneeded features
b. Hardening of existing components
c. Reduction of production/replacement costs
d. Implementation of servicing and checkout aids.

TABLE III. ENVIRONMENTAL COMPARISON

ENVIRONMENT	ORBITER	SRB
VIBRATION		
LIFT-OFF	18.1 grms	21.7 grms
BOOST	18.1 grms	32.0 grms
REENTRY	5.7 grms	47.0 grms
LANDING LOADS	1.5 g (93M/S)	40 g (140M/S) Axial lateral
ACCELERATION (ASCENT)	3.3 g	3.3 g
WATER IMPACT PRESSURE	None	120 psi
WATER IMMERSION PRESSURE	None	57 psi
SALT WATER IMMERSION	None	4 to 7 days
ZERO G	Yes	No
VACUUM	Yes	No

An example of a modification for each of the categories is presented. To facilitate understanding these examples, a basic description of the APU is necessary.

DESCRIPTION OF THE APU

The SRB APU is a monopropellant hydrazine-fueled gas turbine engine used to drive a variable displacement hydraulic pump (Fig. 3). The APU features a gear type fuel pump, driven through the APU speed reduction gearbox, in a bootstrapping mode, to provide high pressure hydrazine fuel to a catalytic type hydrazine gas generator. Flow of fuel to the gas generator is controlled by the gas generator valve module (GGVM), which contains two control valves in a series configuration. In the gas generator, the hydrazine is decomposed to create hot gas for driving the reentry type turbine, turning the gearbox, and driving the hydraulic pump. Speed control of the turbine is accomplished through a pulse counting, logic circuit called the controller. The controller issues open or close signals to the GGVM to control fuel flow in response to electrical pulses generated by the turbine. The controller can control APU speed at 100 percent speed (72,000 rpm) for normal control; at 110 percent speed (79,200 rpm) for redundant TVC operation; or at 112 percent speed (80,640 rpm) for redundant internal APU control. The 100 percent and 110 percent control modes operate the primary control valve of the GGVM and the 112 percent control mode operates the secondary control valve of the GGVM.

ELIMINATION OF UNNEEDED FEATURES

The best example of how "elimination of unneeded equipment" was used in the development of the SRB APU is found in the gearbox.

The Orbiter gearbox, as it was developed, had an intricate externally attached lubrication oil cooling loop; externally attached oil accumulator; and an externally attached gearbox pressurization system to support long duration and on-orbit operations in zero G and vacuum environments (Fig. 4). If necessary for the SRB, these features would have meant additional complication of the TVC system and additional weight and volume in the aft skirt. In addition, the projected effort to design the externally mounted components to meet the vibration and water entry loads; to select materials which would survive in the corrosive seawater environment; and to flight qualify these components would also have been expensive.

The solution to the problem was obvious. Eliminate as many components as possible. Through analysis of APU operational times and the heating loads induced, it appeared to be feasible to tailor the SRB APU operational profile to stay within the 300°F thermal limit of the gearbox without the external components. The results of this analysis were confirmed by a series of tests duplicating expected worst case APU operations. With this verification, the coolant loop, the accumulator, and the pressurization

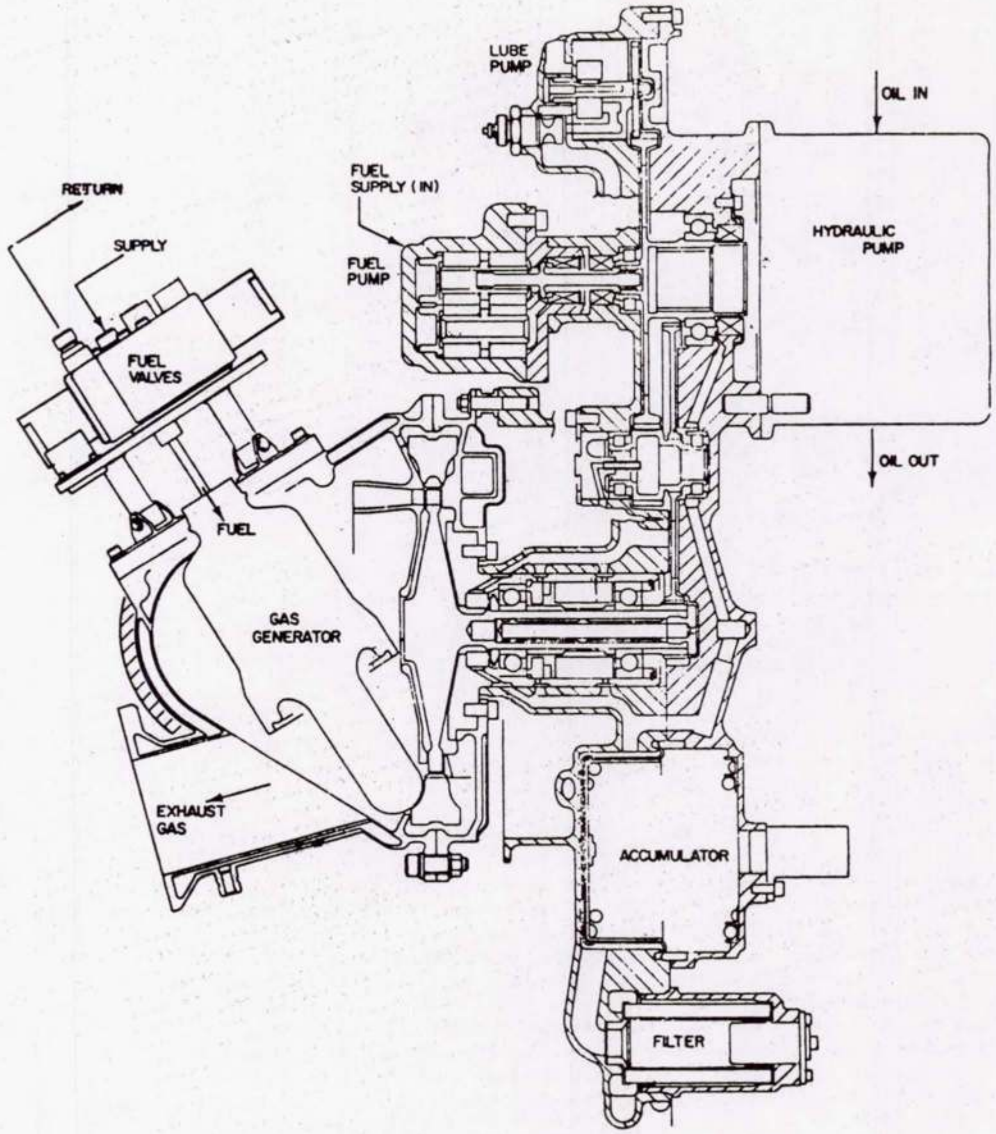

Figure 3. SRB APU.

system were eliminated. An advantage in this elimination was the fact that the components in question were all bolted on externally so that their removal did not significantly alter the design of the basic gearbox.

HARDENING OF COMPONENTS

Hardening, as used in this paper, is meant to describe efforts to improve the resistance of the Orbiter APU components to damage and make them suitable for SRB.

The largest example of hardening is the SRB APU vibration isolation system.

In all cases, the vibration loads expected for SRB APU exceeded those expected for Orbiter. This exceedence caused concern for the operability and life of several APU components such as the gas generator and the fuel pump. To preclude having to redesign these components, a vibration isolation system was developed for the APU (Figs. 5, 6, and 7). The system consisted of three individually tuned vibration damping mounts attached between the APU at its mounting lugs and the primary mounting structure. The result was attenuation of the vibration loads input to the SRB APU to levels well below those for a hard mounted APU and, in some cases, below those experienced by the Orbiter (Table IV).

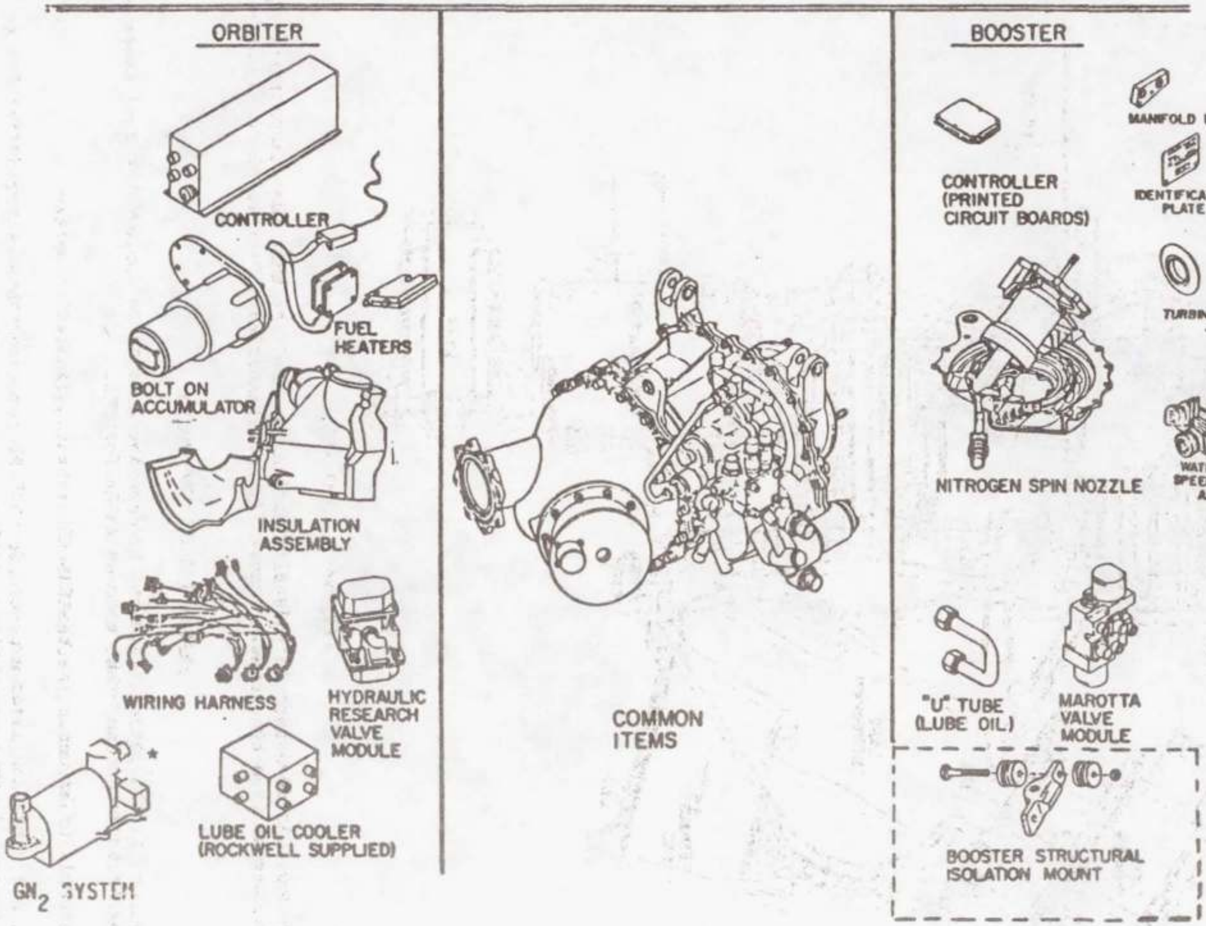

* Changes

Figure 4. Pictorial Hardware Comparison — Booster Versus Orbiter.

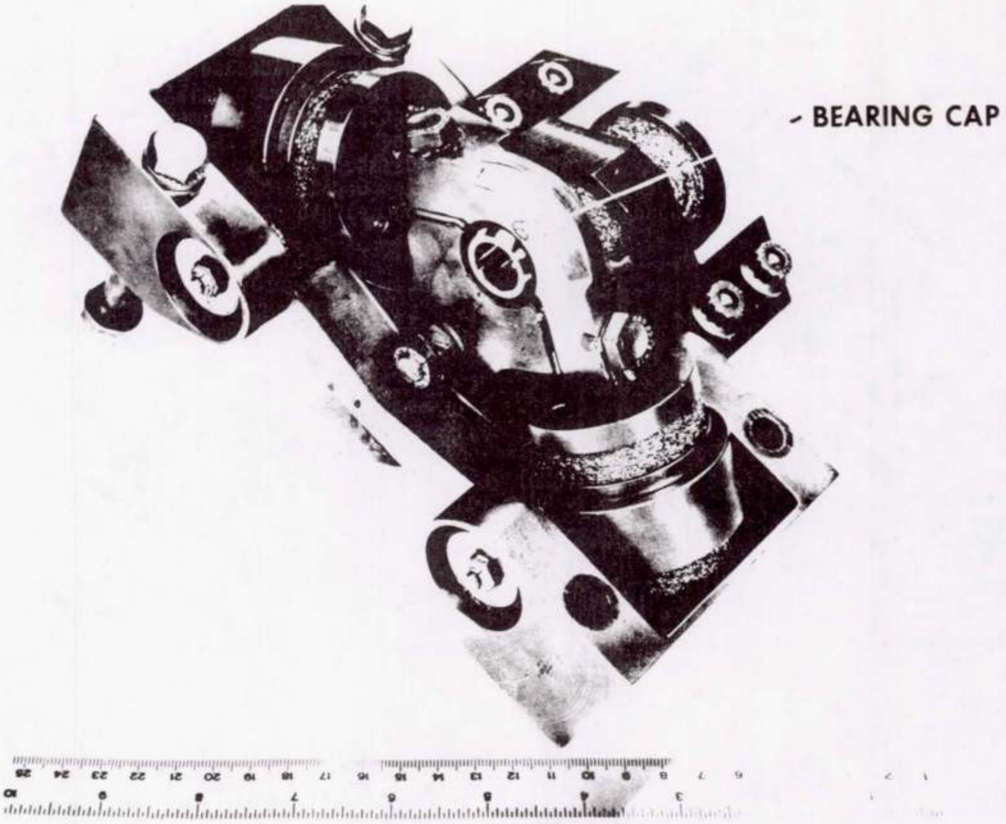

Figure 5. Isolation Mount M-3.

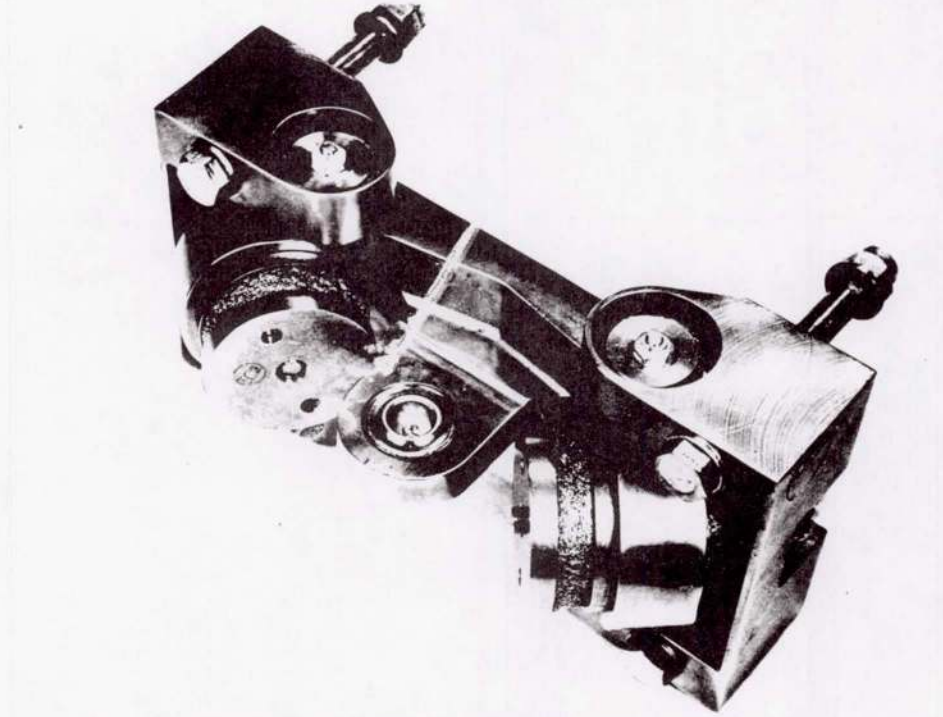

Figure 6. Isolation Mount M-2.

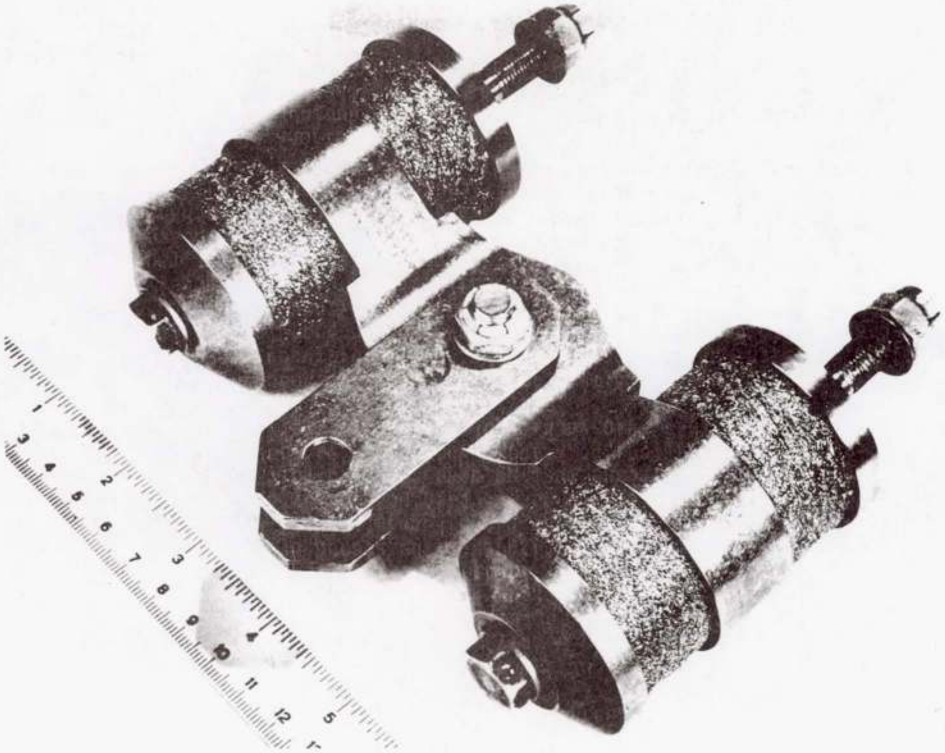

Figure 7. Isolation Mount M-1.

TABLE IV. APU VIBRATION ISOLATION SYSTEM

	INPUTS TO SRB APU[2] HARD MOUNTED (G RMS)	ISOLATED (G RMS)	ORBITER HARD MOUNTED (G RMS)
X (AXIS)			
LIFT-OFF	21.7	5.3	
BOOST	32.0	7.8	18.1
REENTRY	41.5	10.0	
Y (AXIS)			
LIFT-OFF	21.0	11.0	
BOOST	31.1	16.0	5.7
REENTRY	47.0	18.5	
Z (AXIS)			
LIFT-OFF	16.9	5.8	
BOOST	24.0	5.7	5.7
REENTRY	28.1	8.8	

REDUCED COMPLEXITY

This category of modification is mentioned separately, because it covers circumstances where SRB made changes to the Orbiter APU primarily to achieve significant cost advantages. The gas generator valve module is presented as a good example.

The Orbiter gas generator valve module (GGVM) is a complex component utilizing many sophisticated production and operational techniques (Fig. 8). The design incorporated features like welded actuator torque tubes, torque motors, and metal to metal seats. These features were necessary in the Orbiter to meet the demands of reduced fuel consumption; prolonged cycle life; and elevated operating temperatures. Associated with these features were high development and unit costs.

In evaluating GGVM requirements, the SRB realized that its needs were far exceeded by the Orbiter GGVM. Coupled with high Orbiter development and unit costs, this realization lead the SRB to investigate the availability of a less sophisticated GGVM to meet the SRB needs. The resulting SRB GGVM was a direct actuating, poppet type, solenoid valve module with elastomeric type seats (Fig. 8). This unit was produced at approximately one quarter of the unit cost of the Orbiter GGVM. This savings was considerable when multiplied by the projected 400 SRB APU unit buys, and an attrition rate as high as 12 percent.

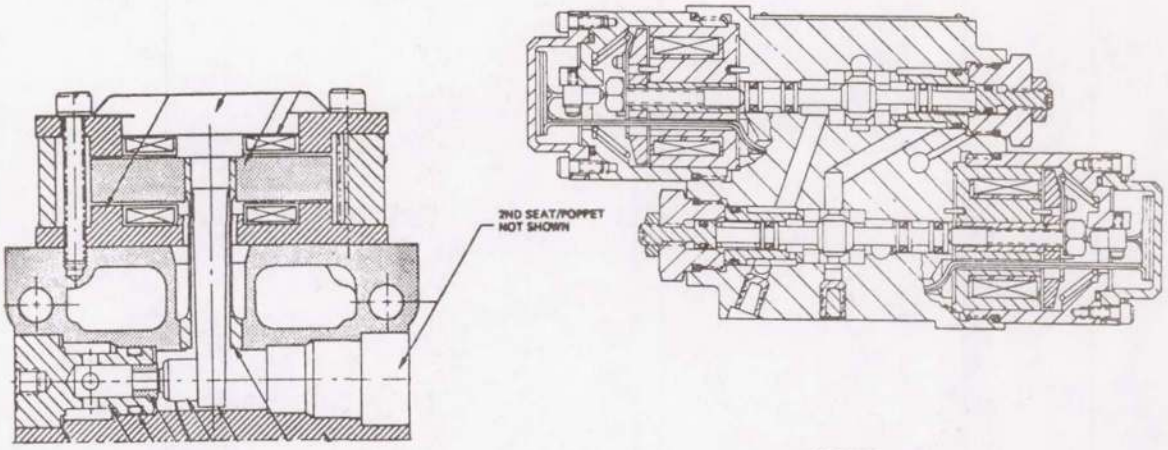

ORBITER
HYDRAULIC RESEARCH

BOOSTER
MAROTTA

	HYDRAULIC RESEARCH	MAROTTA
WEIGHT		
ORBITER	3.2 POUNDS MAXIMUM	
BOOSTER		2.5 POUNDS MAXIMUM WITH SWITCHES
CONSTRUCTION	FLEXURE TUBE, HARD SEATS	SLIDING SPOOL, SOFT SEATS
LIFE	1.5×10^6 CYCLES	ESTIMATED 130,000 CYCLES
REFURBISHABILITY	LOW	HIGH

Figure 8. Comparison of Gas Generator Valve Modules.

PROCESS STREAMLINING

The Shuttle program had a very ambitious operational schedule projected to be as high as one flight per month. This high rate of activity made it mandatory for the SRB to incorporate all practical conveniences which would decrease the numbers of in-flow operations and reduce the total operational turnaround times. Several streamlining features were developed for the SRB APUs to accomplish this. One of these will be discussed.

The most successful streamlining modification undertaken for the SRB APU was the cold gas turbine spin (Fig. 9). This feature was added in the reentry nozzle block of the SRB turbine to provide an easy method to rotate the APU turbine without a full hot-fire operation or disassembly of the TVC system. Some of the advantages of this are: easy checkout of the APU at speeds up to 76 percent of full operational speed; easy checkout of the SRB TVC system at demands up to 26 horsepower; easy servicing of the hydraulic system; and easy fuel system servicing. The total TVC system time savings realized through the incorporation of cold gas spin is measured in days (approximately 6 days/mission). This is significant when compared to an operational turnaround time measured in weeks.

The examples presented were intended to explain the challenge presented in developing the SRB APU from the Orbiter APU and to demonstrate how the SRB APU became a unique entity in the answering of this challenge. Other examples of how the challenge has been met are found in the following:

a. SRB controller
b. SRB fuel pump
c. SRB fuel system
d. SRB gearbox
e. SRB turbine
f. SRB gas generator
g. SRB electrical system.

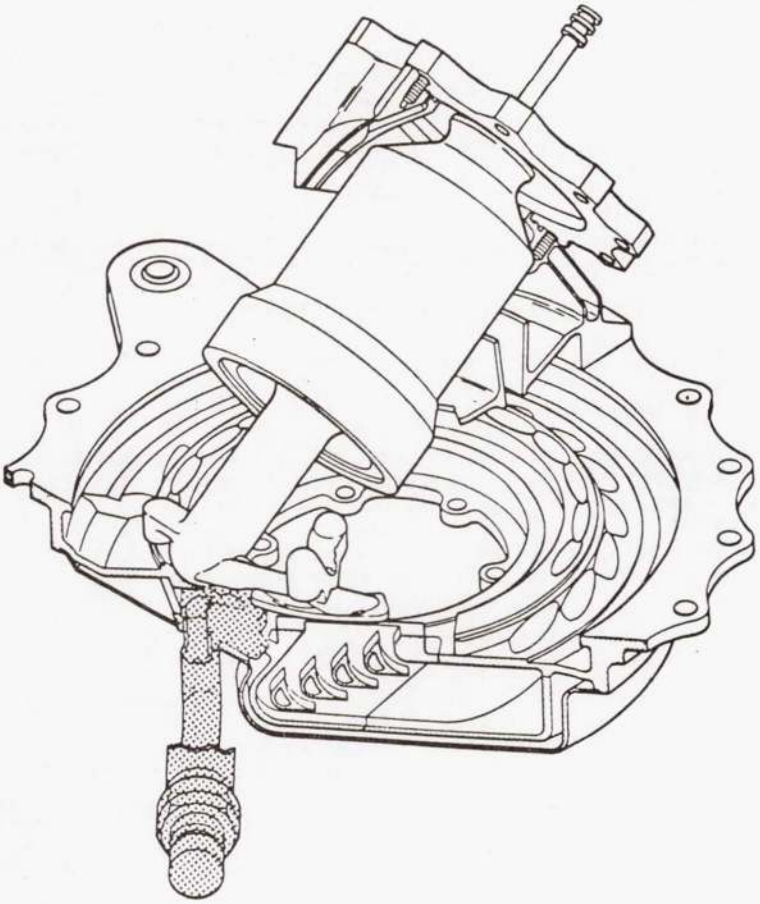

Figure 9. SRB GN_2 Spin Nozzle.

THE SCORE CARD/RESULTS

To evaluate how well a challenge has been met, a score in some form must be kept. Table V gives an indication of the score.

TABLE V. SRB APU OPERATIONAL SCORE CARD

STS	SUCCESSFUL APU ASCENT/OPERATION	RECOVERED APU'S	APU DAMAGE
1	4	4	20%
2	4	4	15%
3	4	4	10%
4	4	SRB'S LOST	100%
5	4	4	3%
6	4	4	1%

To date, all APUs recovered have been slated for return to service. It should be noted that all APUs from STS-5 and STS-6 could have been reused without off-line repair.

A second challenge was to reduce development cost. In this, the program can again be declared successful. The cost for development of the SRB APU resulted in a program savings of approximately 50 percent over the costs anticipated for a totally new development. This savings can be attributed almost totally to the decision to use the Orbiter APU as a basis for development.

WHAT NOW

The challenge of the SRB continues and will until the damage column on the score card reads 0 and hardware turnaround becomes routine.

Efforts to improve the APU continue with the objectives of:

a. Reducing preparation, servicing, and turnaround times.
b. Reducing costs.
c. Improving reliability.

Toward this end, the SRB is presently pursuing major product improvement programs with a primary focus on the development of a low cost SRB gas generator, the most expensive component of the APU. A 40 percent reduction in APU unit costs is a goal for this effort.

Also in work is the development of an unpumped fuel system for the SRB APU. This effort will have significant impacts on APU reliability, servicing, preparation, turnaround, and cost.

CONCLUSIONS

An overall assessment of the SRB APU program leads to several important conclusions.

a. The challenge to use the basic Orbiter APU as the design basis for the SRB APU has been met and has produced positive dividends in cost and schedule.

b. The present SRB APU has been highly successful and has met the challenge of SRB APU reusability.

c. The APU problems encountered during Shuttle operations pose a new challenge wanting real solutions which are cost effective and timely.

d. The challenge to bring an SRB APU into operational status has been met and future challenges are in the category of product improvements.

REFERENCES

1. McCool, A. A.; Verble, A. J.; and Potter, J. H.: Space Transportation System Solid Rocket Booster Thrust Vector Control System; Journal of Spacecraft and Rockets, Volume 17, Number 5, September - October 1980, pp. 407-412.

2. Koenings, D. A. and Johnson, B.: Qualification Report for Solid Rocket Booster Thrust Vector Control System Auxiliary Power Unit Model APU-02; Sundstrand Aviation AER-1539-6, Rev. A., 1979.

3. SRB Systems Data Book, Marshall Space Flight Center, SE-019-083-2H, Rev. A, Vol. 1, June 1977.