UNIVERSITY OF AMSTERDAM

UvA-DARE (Digital Academic Repository)

# Transverse Localization of Light

de Raedt, H.; Lagendijk, A.; de Vries, P.

DOI
10.1103/PhysRevLett.62.47
Publication date
1989

Published in
Physical Review Letters

Link to publication

Citation for published version (APA):
de Raedt, H., Lagendijk, A., & de Vries, P. (1989). Transverse Localization of Light. *Physical Review Letters*, *62*(1), 47-50. https://doi.org/10.1103/PhysRevLett.62.47

General rights
It is not permitted to download or to forward/distribute the text or part of it without the consent of the author(s) and/or copyright holder(s), other than for strictly personal, individual use, unless the work is under an open content license (like Creative Commons).

Disclaimer/Complaints regulations
If you believe that digital publication of certain material infringes any of your rights or (privacy) interests, please let the Library know, stating your reasons. In case of a legitimate complaint, the Library will make the material inaccessible and/or remove it from the website. Please Ask the Library: https://uba.uva.nl/en/contact, or a letter to: Library of the University of Amsterdam, Secretariat, Singel 425, 1012 WP Amsterdam, The Netherlands. You will be contacted as soon as possible.

*UvA-DARE is a service provided by the library of the University of Amsterdam (https://dare.uva.nl)*

Download date:23 Aug 2022

# Transverse Localization of Light

Hans De Raedt,[(1,2)] Ad Lagendijk,[(2,3)] and Pedro de Vries[(2)]
[(1)]*Physics Department, University of Antwerp, Universiteitsplein 1, B-2610 Wilrijk, Belgium*
[(2)]*Natuurkundig Laboratorium, University of Amsterdam, Valckenierstraat 65, 1018 XE Amsterdam, The Netherlands*
[(3)]*Fundamenteel Onderzoek der Materie (FOM)-Instituut voor Atoom- en Molecuulfysica, Kruislaan 407, 1098 SJ Amsterdam, The Netherlands*
(Received 9 June 1988)

We study the propagation of light through a semi-infinite medium with transverse disorder (that is, disorder in two directions only). We show that such a system exhibits strong two-dimensional localization by demonstrating that on propagation a beam expands until the transverse localization length is reached.

PACS numbers: 42.40.−y

The concept of localization was introduced in the classic work of Anderson[1] on the properties of an electron moving in a random potential. As Anderson localization is a consequence of the wave-mechanical nature only, this concept is not limited to quantum mechanics. The key issue is that disorder can be so strong that the mean free path becomes of the order of the wavelength (divided by $2\pi$). This Ioffe-Regel criterium can be applied to many wave equations besides the Schrödinger wave equation, such as, for instance, the Maxwell equations. In particular, localization of light has attracted a lot of attention recently.[2-4] The idea is that in media with strong disorder the propagation of light is not possible anymore because interference of multiple elastically scattered light leads to localization. One could describe this phenomena as the formation of "random cavities." In optics, the possibility of one observing localization has become very real after the discovery of a precursor effect known as weak localization.[5,6]

In this Letter we want to introduce a new form of localization of light in which the wave is propagating in one direction but confined in the other two. We call this effect "transverse localization." If the index of refraction is a random function of $(x,y)$ but is constant in the positive $z$ direction, we will show that a wave coming in from the negative $z$ direction and having a certain beam profile will propagate in the positive $z$ direction and expand until the beam diameter becomes of the order of the transverse localization length. From then on, the beam propagates without further expansion or, in other words, behaves as if it is going through a "random fiber."

This work consists of two parts. In the first, we argue that the problem can be mapped onto the time-dependent two-dimensional Schrödinger equation, the $z$ coordinate playing the role of time. On general grounds one expects localization to occur in the Schrödinger problem, as the generally held belief is that in one and two dimensions all states are localized (except for particular kinds of disorder).[7] In the second part, the occurrence of localization is verified quantitatively. This is done by our performing extensive numerical simulations. As all interference effects have to be included, this is a highly nontrivial problem. The simulations were performed with techniques developed by one of us.[8]

Let us consider a medium of which the index of refraction is homogeneous in one direction only. The propagation of the wave field through this medium is governed by the scalar Helmholtz equation[9]

$$\nabla^2\phi + k^2 n^2(x,y)\phi = 0\,, \tag{1}$$

where $k = 2\pi/\lambda$, $n(x,y) \equiv n(\omega,x,y)$ is the index of refraction at the point $(x,y,z)$ and in general depends on the angular frequency $\omega = 2\pi c/\lambda$ [since we consider monochromatic light only, the $\omega$ dependence of $n(x,y)$ will be omitted]. For simplicity we use the scalar form of the Maxwell equations. Obviously if the medium extends from $z=-\infty$ to $z=+\infty$, the $z$ dependence of the wave field factors out in a trivial manner. Putting $\phi(x,y,z) = \Phi(x,y)\exp(-iqz)$, (1) reduces to

$$H\Phi = (q^2 - k^2 n_0^2)\Phi\,, \tag{2a}$$

where

$$H \equiv \partial^2/\partial x^2 + \partial^2/\partial y^2 + V(x,y)\,, \tag{2b}$$

and an effective index of refraction,

$$n_0^2 \equiv S^{-1}\int_S n^2(x,y)\,dx\,dy\,, \tag{2c}$$

has been introduced such that the average over the sample of $V(x,y) \equiv k^2[n^2(x,y) - n_0^2]$ is zero. Up to a minus sign, $H$ is the Hamiltonian for a quantum particle moving in a potential $-V(x,y)$. Common lore then says that if $n(x,y)$ is a random function, interference will cause the wave field to be exponentially localized in the $(x,y)$ plane.[7]

From an experimental point of view, it is essential to see how an incoming wave behaves. To this end we have to consider a semi-infinite system. If localization occurs, one expects that an incoming wave will not spread in the

© 1988 The American Physical Society 

transverse direction beyond the localization length. Otherwise the beam will expand forever. Writing $\phi(x,y,z)=\varphi(x,y,z)\exp(-ikn_0z)$, (1) becomes equivalent to

$$-\frac{\partial^2\varphi}{\partial z^2}+2ikn_0\frac{\partial\varphi}{\partial z}=H\varphi. \tag{3}$$

Invoking the standard argument that if

$$\left|\frac{\partial^2\varphi}{\partial z^2}\right|\ll 2kn_0\left|\frac{\partial\varphi}{\partial z}\right|, \tag{4}$$

for all $(x,y)\in S$, it is allowed to replace (3) by the paraxial form of the wave equation

$$2ikn_0\frac{\partial\psi}{\partial z}=H\psi, \tag{5}$$

where the symbol $\psi$ has been introduced to distinguish the solution $\psi$ of parabolic approximation (5) from the solution $\varphi$ of elliptic problem (3). Apart from a missing minus sign in the definition of $H$, (5) is nothing but the time-dependent Schrödinger equation (TDSE) for a particle moving in the 2D potential $-V(x,y)$, $z$ playing the role of time. The initial state $\psi(x,y,z=0)=\phi(x,y,z=0)$ is precisely the wave field at the entrance plane, i.e., the incoming wave front. Within the parabolic approximation we can obtain the wave field for $z>0$ by integrating the TDSE (5). Of course, it remains to be seen to what extent the solution of (5) satisfies requirement (4).

It is of interest to note that theoretical calculations of high-resolution electron-microscope images are based on the same formalism as the one used here.[10] However, the assumption that the potential is $z$ independent is unlikely to be correct, the reason being that scattering of the wave field is due to the interaction of the electron with (regularly) stacked atoms, not due to variations in the index of refraction.

The intimate relationship between the solutions of (2), (3), and (5) can be made more explicit by writing the corresponding solutions as a linear combination of the eigenstates $u_n\equiv u_n(x,y)$ of $H$,[11] i.e., $Hu_n=E_nu_n$, $\varphi=\sum_n\varphi_nu_n\exp(-i\hat{E}_nz)$, and $\psi=\sum_n\psi_nu_n\exp(-i\tilde{E}_nz)$, whereby $\varphi_n$ and $\psi_n$ are the corresponding expansion coefficients. The "energies" $E_n$, $\hat{E}_n$, and $\tilde{E}_n$ are related to each other through[11]

$$E_n=2kn_0\tilde{E}_n=\hat{E}_n^2+2kn_0\hat{E}_n. \tag{6}$$

Therefore, having the solution of one of the three equations makes it possible to obtain the solution of the other two. We remark that (2), (3), and (5) only differ in the way they describe the propagation of light in the $z$ direction, the properties of the field in the $(x,y)$ plane being the same.

Our approach to solve the present problem is to perform a numerical integration of the TDSE (5), employing a fourth-order product-formula algorithm.[8] This algorithm is unconditionally stable and allows for an accurate calculation of the solution of (5) for "times" $z$ and system sizes large enough to enter the regime where localization effects might be observable.

We now present the model which we have simulated in more detail. We start with a rectangular parallelepiped of dimensions $L\times L\times L_z$ in which we put a variable number of parallelepipeds of length $d$, width $d$, and height $L_z$, according to a certain rule to be specified later. Each of these "filaments" has a real refractive index $n_2$ and together they fill a fraction $p$ of the sample volume. The remainder of the volume is filled with a substance having a real index refraction $n_1$. A beam of monochromatic coherent light enters the sample perpendicular to one of the square surfaces, which for convenience we choose to lie in the $(x,y)$ plane at $z=0$. The beam at the entrance plane will be modeled by a Gaussian profile of width $b$. The center of the beam coincides with the center of the $z=0$ plane. The area $B$ on the entrance plane, covered by the incident beam of light, is assumed to be much less than the area $S=L^2$ of the entrance plane itself, i.e., $B\ll S$, such that the beam will not expand as to cover the whole surface $S$.

The parameters entering this model are the refractive indices $n_1$ and $n_2$, the width $b$ of the incident beam, the dimensions $L\times L\times L_z$ of the sample and $d\times d\times L_z$ of the filaments having refractive index $n_2$, and the filling fraction $p$. Note that by construction the index of refraction of the sample changes discontinuously as a function $x$ or $y$. The term containing the gradient of $n(x,y)$ does therefore not appear in (1).[9]

To mimic the experimental realization, some basic constraints on the model parameters have to be taken into account. One is that the width of the beam must be much larger than the wavelength of the light. Otherwise, carefully selected initial conditions would be required to take into account the diffraction of the beam. To solve the TDSE (5) numerically it has to be put on a 2D lattice. Thereby it is convenient to express all distances in units of the wavelength $\lambda$. The mesh size $\delta$ has to be chosen such that variations of $\psi$ as a function of $x$ or $y$ are smooth on a scale of the mesh size. Simulations were carried out with $0.25\lambda\le\delta\le\lambda$, up to 76800 "time" steps and a lattice of $401\times401$ sites. In its lattice form the model resembles the Anderson model of localization[1] except that the potential at a particular site is not a uniform random variable drawn in the interval $[-W/2,W/2]$. As the refractive index is constant over a certain number of lattice spacings, there is also some correlation between the potentials on different lattice sites; otherwise it would be a binary alloy model.[12] In our numerical work $b=10\lambda$, $d=4\lambda$, which is not unrealistic, $n_1=1$ and $n_2=1.25$ (1.5), the latter being within the range of refractive indices of existing materials, and $z\le24000\lambda$ ($6000\lambda$).

Various tests have been performed. For instance, if

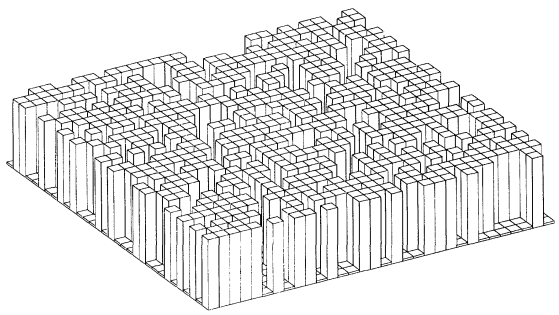

FIG. 1. The coarse-grained potential $V(x,y)$ for a sample in which scatterers of refractive index $n_2$ are distributed randomly.

there is only one parallelepiped ($n_2 > n_1$) placed at the center of a large sample ($d \ll L$), waveguide behavior should result and this is also found in our simulations. As the amplitude of the wave field is almost zero outside the waveguide, the light is localized but certainly not as a consequence of randomness. Increasing the number of parallelepipeds by distributing them randomly in the sample, clusters of material of refractive index $n_2$ are formed. In practice, the following rule has been employed to fill the sample. The sample is first divided into cells of size $b \times b \times L_z$. The refractive index of each cell (either $n_1$ or $n_2$) is chosen randomly, taking into account the filling factor $p$.

As long as $\lambda \ll d$ there is little probability of having amplitude traversing through one of the "potential" barriers. In this case the system resembles a collection of fibers which vary in size and shape. Depending on the filling fraction $p$ (one of these) clusters may be percolating or not. If not then within each of these waveguides the wave field is, for all practical purposes, localized in the same trivial sense as above. Otherwise, the beam of light may expand until it reaches the edges of the sample. For the present purposes the most interesting situation arises when $\lambda \approx d$ and $p = \frac{1}{2}$ (which is below the percolation threshold $p_c = 0.5927$). Then there is a good chance for the wave field to "tunnel" through the potential barriers where it can interfere with light that has arrived there by taking different routes. A "coarse-grained" picture of such a sample is shown in Fig. 1.

Consistency of the arguments used above requires that for this choice of the potential $V(x,y)$, the solution of (5) satisfies (3), or equivalently,

$$|H\psi| \gg |H^2\psi|/4k^2n_0^2 , \tag{7}$$

for all $(x,y) \in S$ and $0 \le z \le L_z$. If $\psi(x,y,z) = 0$ for some region in $S$, (7) is not satisfied, but then within $S$ the parabolic approximation is exact, albeit in a trivial manner. A more relevant measure for the quality of the parabolic approximation is to take the pair $(x,y)$ (for each $z$) for which the difference $|H\psi| - |H^2\psi|/4k^2n_0^2$

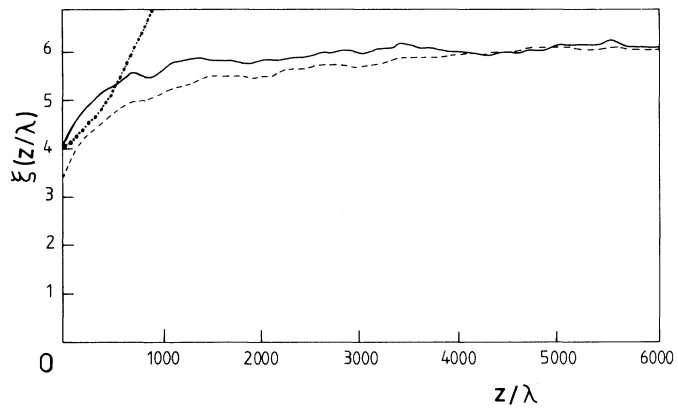


FIG. 2. A measure of the width of the wave field $\xi(z)$ (in units of $\lambda$) as a function of the length of the sample $z$. Solid line: Estimate based on the second moment of $|\psi(x,y,z)|^2$. Dashed line: Estimate obtained from the knowledge of the fourth moment of $|\psi(x,y,z)|^2$. Dots: $\xi(z)$ for a uniform medium with the same estimator as for the solid line.

reaches its maximum. In all cases that we have simulated we have found the left-hand side of (7) to be a factor of 10 larger than the right-hand side, suggesting that the condition (4) is reasonably well satisfied.

In Fig. 2 we show some representative results for the case $n_2 = 1.5$. The solid line is a measure for the width of the amplitude of the wave field, namely,

$$\xi(z) \propto [\langle\psi(z)|\mathbf{R}^2|\psi(z)\rangle - \langle\psi(z)|\mathbf{R}|\psi(z)\rangle^2]^{1/2} ,$$

where $\mathbf{R}$ is the vector to a point in the $(x,y)$ plane (the precise relationship is given in Ref. 8). It follows that the area for which there is substantial intensity is approximately constant for $1200\lambda \le z \le 6000\lambda$. To test whether the wave field decays exponentially with distance (for large $z$), $\xi(z)$ has also been calculated with the fourth moment, and from Fig. 2 (dashed line) it is seen that the agreement is good. From Fig. 2 one fur-

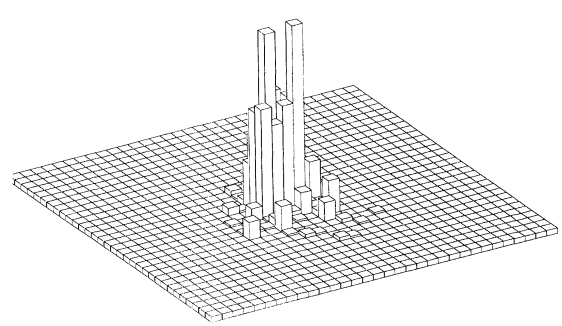

FIG. 3. Snapshot of the intensity of light after traveling a distance of about 6000 wavelengths through a randomly filled sample.

ther learns that initially the wave field expands, essentially as a free field for which $\xi(z) \propto z$,[8] but then it settles to a more or less constant value. The remaining fluctuations merely reflect the internal dynamics of the field as a function of $z$.[8] For sufficiently large $z$, $\xi(z)$ is seen to be fluctuating around a finite value which is directly proportional to the localization length.[8] Most of the amplitude of the wave field is confined to some region in 2D space, as is seen most clearly from Fig. 3. Within the theoretical framework used we have therefore given direct numerical evidence that an array of randomly placed scatterers will exhibit two-dimensional strong localization of light.

This work is partially supported by the Supercomputer Project of the Belgian National Science Foundation (NFWO) and NATO Grant No. RG.86/0026, and is part of the research program of the Stichting voor Fundamenteel Onderzoek der Materie (FOM), which is financially supported by the Nederlandse Organisatie voor Wetenschappelijk Onderzoek (NWO). One of us (H.D.R.) thanks the NFWO for financial support.

[1]P. W. Anderson, Phys. Rev. **109**, 1493 (1958).

[2]S. John, Phys. Rev. Lett. **53**, 2169 (1984).

[3]P. W. Anderson, Philos. Mag. B **52**, 505 (1985).

[4]A. Lagendijk, M. P. van Albada, and M. B. van der Mark, Physica (Amsterdam) **140A**, 183 (1986).

[5]M. P. van Albada and A. Lagendijk, Phys. Rev. Lett. **55**, 2692 (1985).

[6]P. E. Wolf and G. Maret, Phys. Rev. Lett. **55**, 2696 (1985).

[7]B. Souillard, in *Chance and Matter,* Proceedings of the Les Houches Summer School, Session XLVI, edited by J. Souletie, J. Vannimenus, and R. Stora (Elsevier, Amsterdam, 1987).

[8]H. De Raedt, Comput. Phys. Rep. **7**, 1 (1987).

[9]M. Born and E. Wolf, *Principles of Optics* (Pergamon, Oxford, 1986).

[10]D. Van Dyck, *Advances in Electronics and Electron Physics* (Academic, New York, 1985), Vol. 65, p. 295.

[11]M. D. Feit and J. A. Fleck, Jr., Appl. Opt. **18**, 2843 (1979).

[12]J. M. Ziman, *Models of Disorder* (Cambridge Univ. Press, Cambridge, 1979).